JBL® CS SERIES

car audio speaker
spanish translation
french translation
italian translation
german translation
dutch translation
danish translation
finnish translation
portuguese translation
russian translation
polish translation
swedish translation
turkish translation
s. chinese translation
t. chinese translation
japanese translation

INSTALLATION MANUAL
SPANISH TRANSLATION
FRENCH TRANSLATION
ITALIAN TRANSLATION
GERMAN TRANSLATION
DUTCH TRANSLATION
DANISH TRANSLATION
FINNISH TRANSLATION
PORTUGUESE TRANSLATION
RUSSIAN TRANSLATION
POLISH TRANSLATION
SWEDISH TRANSLATION
TURKISH TRANSLATION
S. CHINESE TRANSLATION
T. CHINESE TRANSLATION
JAPANESE TRANSLATION

CS-4, CS-5, CS-6, CS-69

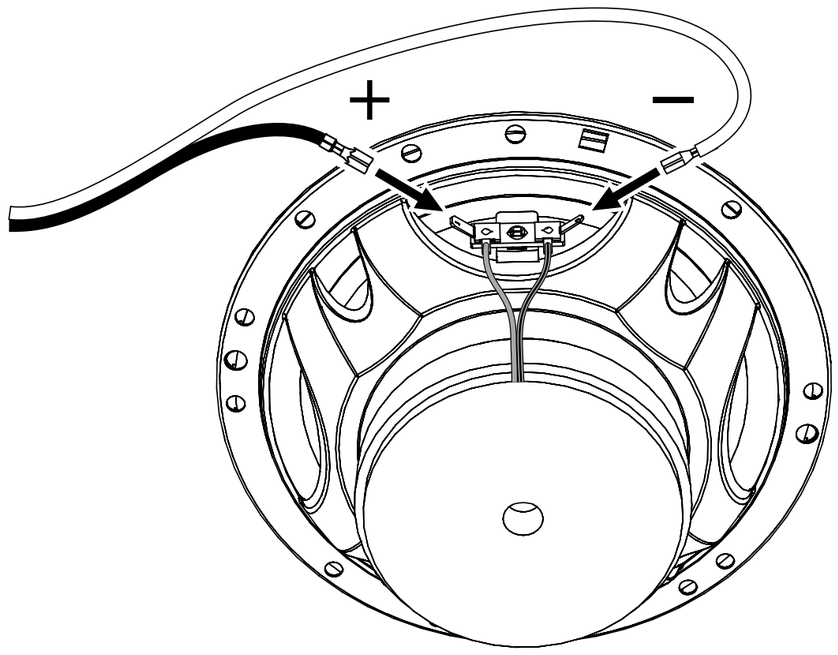

CS-5C, CS-6C

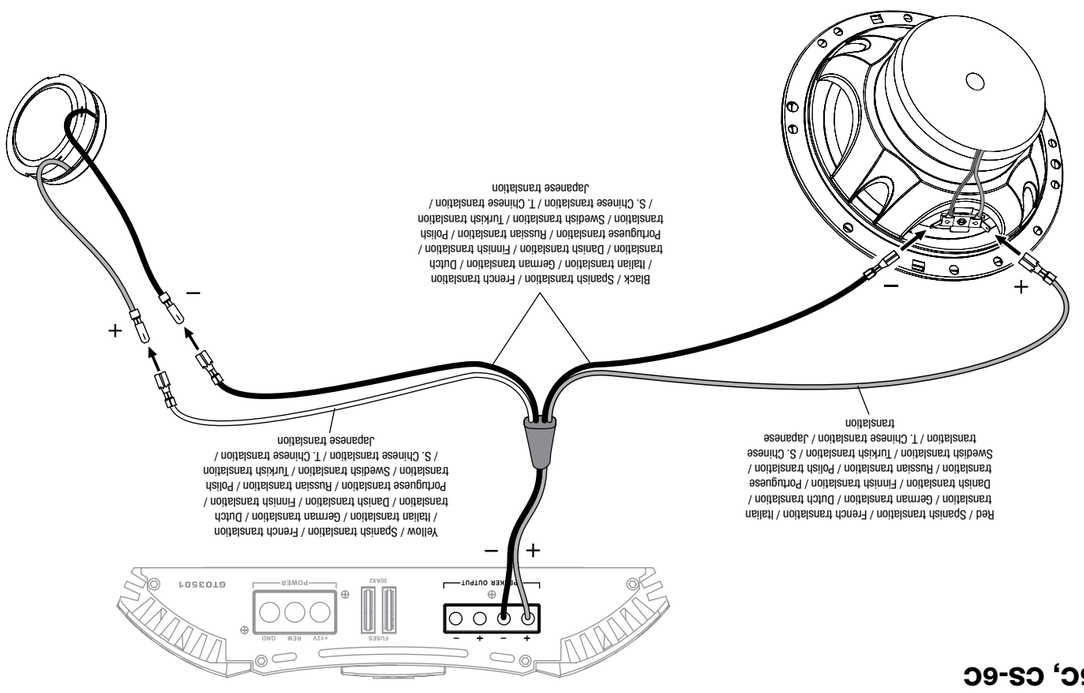

CS-5, CS-6

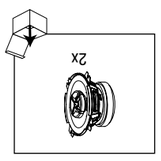

CS-5C, CS-6C

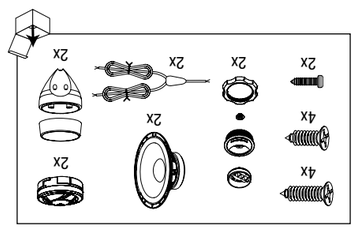

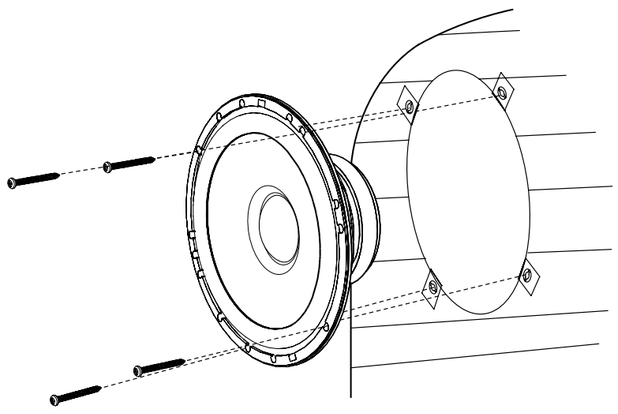

CS-5C, CS-6C

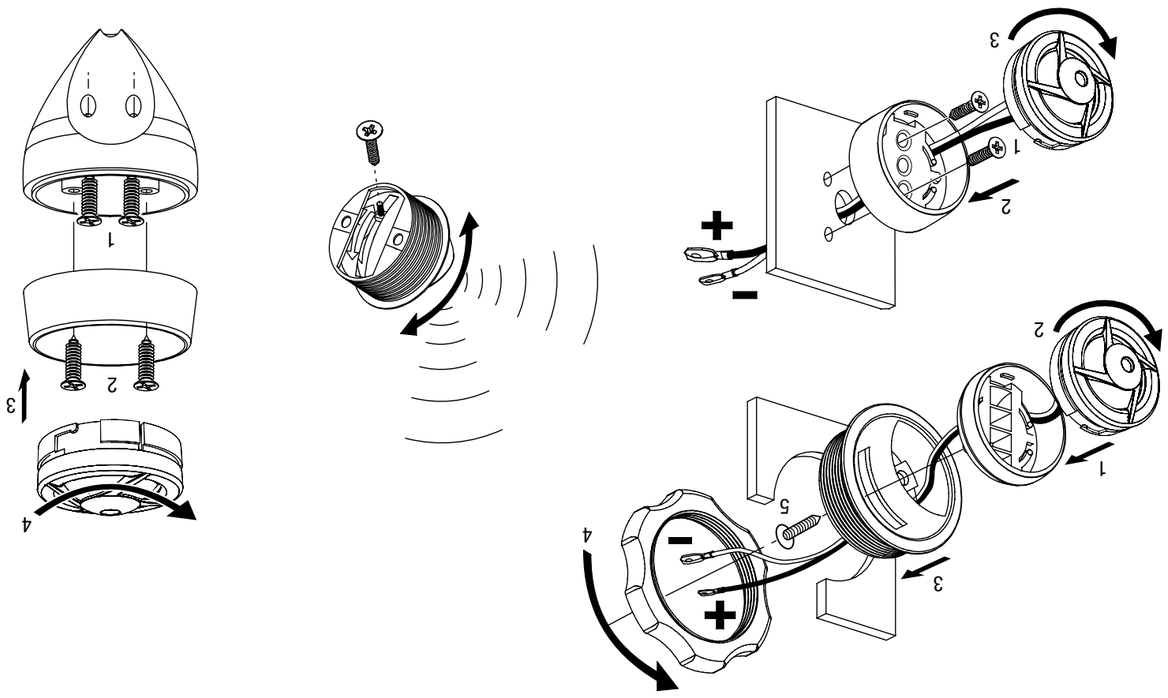

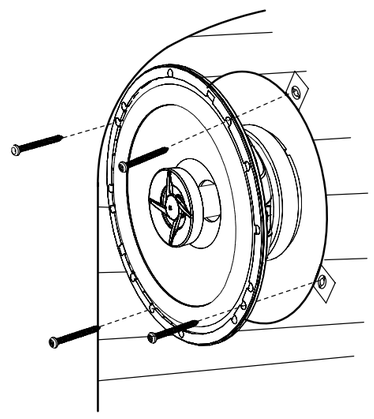

CS-4

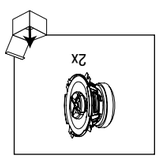

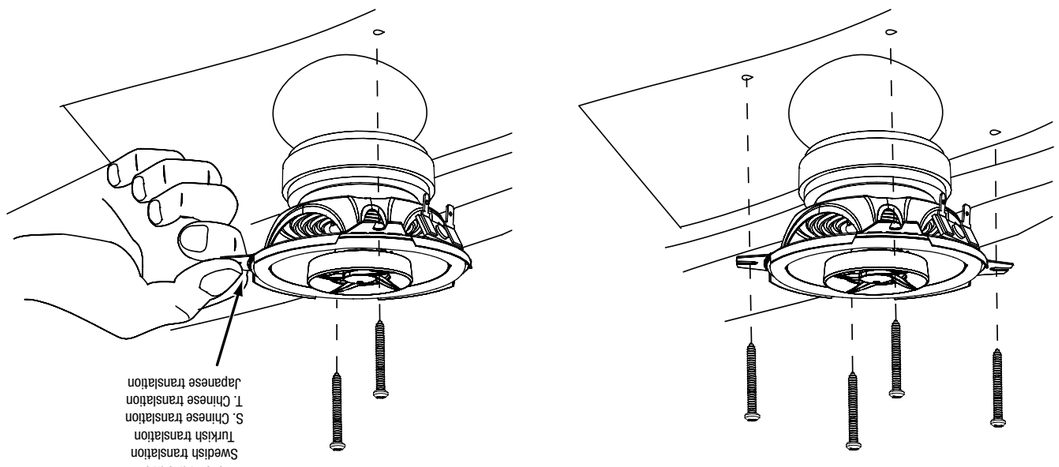

CS-69

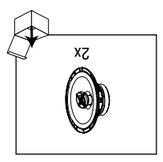

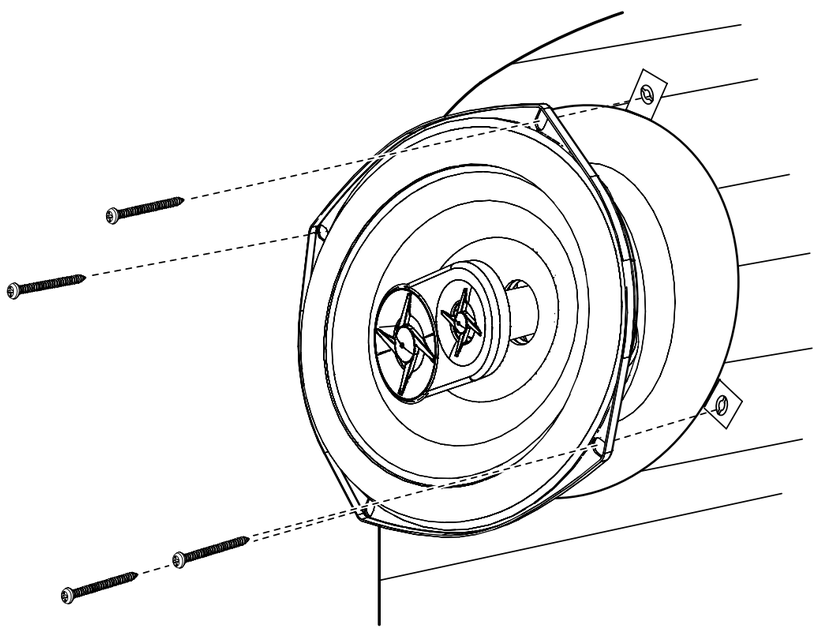

HARMAN

HARMAN Consumer, Inc.
8500 Balboa Boulevard, Northridge, CA 91329 USA

© 2010 HARMAN International Industries, Incorporated. All rights reserved.
JBL is a trademark of HARMAN International Industries, Incorporated, registered in the United States and/or other countries.

Features, specifications and appearance are subject to change without notice.

© 2010 HARMAN International Industries, Incorporated. All rights reserved.
JBL is a trademark of HARMAN International Industries, Incorporated, registered in the United States and/or other countries.

Features, specifications and appearance are subject to change without notice.

© 2010 HARMAN International Industries, Incorporated. All rights reserved.
JBL is a trademark of HARMAN International Industries, Incorporated, registered in the United States and/or other countries.

Features, specifications and appearance are subject to change without notice.

© 2010 HARMAN International Industries, Incorporated. All rights reserved.
JBL is a trademark of HARMAN International Industries, Incorporated, registered in the United States and/or other countries.

Features, specifications and appearance are subject to change without notice.

© 2010 HARMAN International Industries, Incorporated. All rights reserved.
JBL is a trademark of HARMAN International Industries, Incorporated, registered in the United States and/or other countries.

Features, specifications and appearance are subject to change without notice.

© 2010 HARMAN International Industries, Incorporated. All rights reserved.
JBL is a trademark of HARMAN International Industries, Incorporated, registered in the United States and/or other countries.

Features, specifications and appearance are subject to change without notice.

© 2010 HARMAN International Industries, Incorporated. All rights reserved.
JBL is a trademark of HARMAN International Industries, Incorporated, registered in the United States and/or other countries.

Features, specifications and appearance are subject to change without notice.

© 2010 HARMAN International Industries, Incorporated. All rights reserved.
JBL is a trademark of HARMAN International Industries, Incorporated, registered in the United States and/or other countries.

Features, specifications and appearance are subject to change without notice.

© 2010 HARMAN International Industries, Incorporated. All rights reserved.
JBL is a trademark of HARMAN International Industries, Incorporated, registered in the United States and/or other countries.

Features, specifications and appearance are subject to change without notice.

© 2010 HARMAN International Industries, Incorporated. All rights reserved.
JBL is a trademark of HARMAN International Industries, Incorporated, registered in the United States and/or other countries.

Features, specifications and appearance are subject to change without notice.

www.jbl.com

CS-4

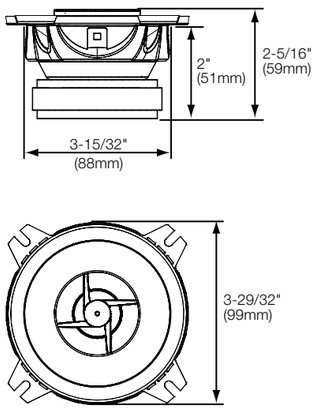

CS-5

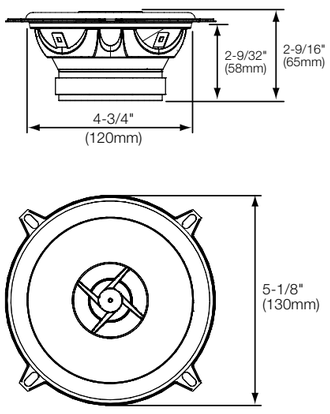

CS-6

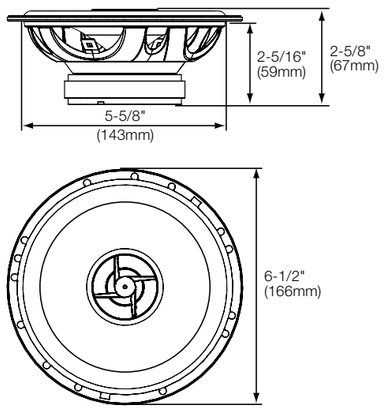

CS-69

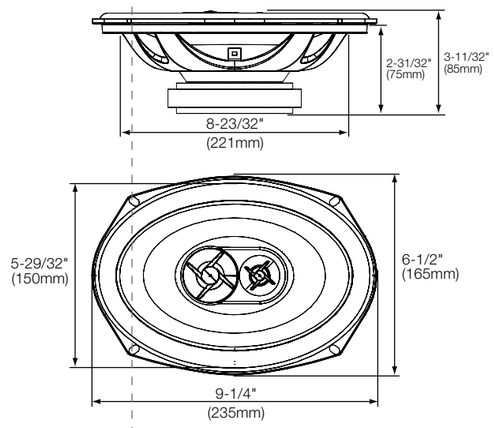

CS-5C

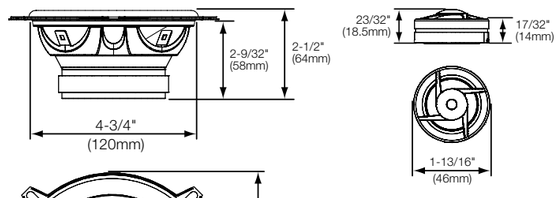

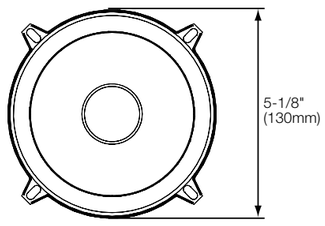

CS-6C

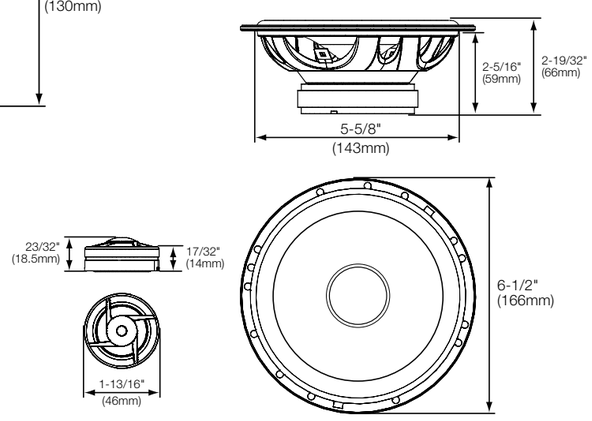

THIELE-SMALL PARAMETERS

	CS-4	CS-5	CS-6	CS-69	CS-5C	CS-6C
BL (T.m)	3.13	3.81	4.07	5.38	3.73	3.73
DCR (ohms)	3.13	3.10	3.09	3.09	3.14	3.09
Mms (g)	5.07	8.00	10.97	19.54	8.27	11.24
Sd (cm^2)	55.42	103.87	143.14	222.66	103.87	143.14
Cms (um/N)	476	408	359	399	470	445
Vas (1)	2.05	6.18	10.33	27.78	7.12	12.80
Fs (Hz)	102.49	88.15	80.20	57.00	80.77	71.18
Qes	1.04	0.95	1.03	0.75	0.95	1.12
Qms	8.99	8.64	5.51	5.60	8.00	4.94
Qts	0.93	0.85	0.87	0.66	0.85	0.91

GERMAN TRANSLATION
DUTCH TRANSLATION
DANISH TRANSLATION
FINNISH TRANSLATION
PORTUGUESE TRANSLATION
RUSSIAN TRANSLATION
POLISH TRANSLATION
SWEDISH TRANSLATION
TURKISH TRANSLATION
S. CHINESE TRANSLATION
T. CHINESE TRANSLATION
JAPANESE TRANSLATION
SPANISH TRANSLATION
FRENCH TRANSLATION
ITALIAN TRANSLATION

SPECIFICATIONS — English

	CS-4	CS-5	CS-6	CS-69	CS-5C	CS-6C	CS-5C, CS-6C Tweeter
Type	4" (100mm) two-way speaker	5-1/4" (130mm) two-way speaker	165mm two-way speaker	6" x 9" (152mm x 230mm) three-way speaker	5-1/4" (130mm) two-way component system	165mm two-way component system	1" (25mm) component tweeter
Continuous power handling	30W	35W	45W	70W	40W	50W	--
Peak power handling	90W	105W	135W	210W	120W	150W	--
Frequency response	75Hz – 20kHz	70Hz – 20kHz	55Hz – 20kHz	40Hz – 20kHz	70Hz – 20kHz	55Hz – 20kHz	--
Nominal impedance	4 ohms	4 ohms	4 ohms	4 ohms	4 ohms	4 ohms	--
Sensitivity (2.83V/m)	90dB	93dB	93dB	94dB	92dB	92dB	--
External diameter	3-29/32" (99mm)	5-1/8" (130mm)	6-1/2" (166mm)	9-1/4" x 6-1/2" (235mm x 165mm)	5-1/8" (130mm)	6-1/2" (166mm)	1-13/16" (46mm)
Mounting cutout diameter	3-15/32" (88mm)	4-3/4" (120mm)	5-5/8" (143mm)	8-23/32" x 5-29/32" (221mm x 150mm)	4-3/4" (120mm)	5-5/8" (143mm)	4-3/4" (120mm)
Total depth	2-5/16" (59mm)	2-9/16" (65mm)	2-5/8" (67mm)	3-11/32" (85mm)	2-1/2" (64mm)	2-19/32" (66mm)	27/32" (21mm)
Mounting depth	2" (51mm)	2-9/32" (58mm)	2-5/16" (59mm)	2-31/32" (75mm)	2-9/32" (58mm)	2-5/16" (59mm)	2-9/32" (58mm)

SPECIFICATIONS — Finnish

	CS-4	CS-5	CS-6	CS-69	CS-5C	CS-6C	CS-5C, CS-6C Tweeter
Type	4" (100mm) two-way speaker	5-1/4" (130mm) two-way speaker	165mm two-way speaker	6" x 9" (152mm x 230mm) three-way speaker	5-1/4" (130mm) two-way component system	165mm two-way component system	1" (25mm) component tweeter
Continuous power handling	30W	35W	45W	70W	40W	50W	--
Peak power handling	90W	105W	135W	210W	120W	150W	--
Frequency response	75Hz – 20kHz	70Hz – 20kHz	55Hz – 20kHz	40Hz – 20kHz	70Hz – 20kHz	55Hz – 20kHz	--
Nominal impedance	4 ohms	4 ohms	4 ohms	4 ohms	4 ohms	4 ohms	--
Sensitivity (2.83V/m)	90dB	93dB	93dB	94dB	92dB	92dB	--
External diameter	3-29/32" (99mm)	5-1/8" (130mm)	6-1/2" (166mm)	9-1/4" x 6-1/2" (235mm x 165mm)	5-1/8" (130mm)	6-1/2" (166mm)	1-13/16" (46mm)
Mounting cutout diameter	3-15/32" (88mm)	4-3/4" (120mm)	5-5/8" (143mm)	8-23/32" x 5-29/32" (221mm x 150mm)	4-3/4" (120mm)	5-5/8" (143mm)	4-3/4" (120mm)
Total depth	2-5/16" (59mm)	2-9/16" (65mm)	2-5/8" (67mm)	3-11/32" (85mm)	2-1/2" (64mm)	2-19/32" (66mm)	27/32" (21mm)
Mounting depth	2" (51mm)	2-9/32" (58mm)	2-5/16" (59mm)	2-31/32" (75mm)	2-9/32" (58mm)	2-5/16" (59mm)	2-9/32" (58mm)

SPECIFICATIONS — Portuguese

	CS-4	CS-5	CS-6	CS-69	CS-5C	CS-6C	CS-5C, CS-6C Tweeter
Type	4" (100mm) two-way speaker	5-1/4" (130mm) two-way speaker	165mm two-way speaker	6" x 9" (152mm x 230mm) three-way speaker	5-1/4" (130mm) two-way component system	165mm two-way component system	1" (25mm) component tweeter
Continuous power handling	30W	35W	45W	70W	40W	50W	--
Peak power handling	90W	105W	135W	210W	120W	150W	--
Frequency response	75Hz – 20kHz	70Hz – 20kHz	55Hz – 20kHz	40Hz – 20kHz	70Hz – 20kHz	55Hz – 20kHz	--
Nominal impedance	4 ohms	4 ohms	4 ohms	4 ohms	4 ohms	4 ohms	--
Sensitivity (2.83V/m)	90dB	93dB	93dB	94dB	92dB	92dB	--
External diameter	3-29/32" (99mm)	5-1/8" (130mm)	6-1/2" (166mm)	9-1/4" x 6-1/2" (235mm x 165mm)	5-1/8" (130mm)	6-1/2" (166mm)	1-13/16" (46mm)
Mounting cutout diameter	3-15/32" (88mm)	4-3/4" (120mm)	5-5/8" (143mm)	8-23/32" x 5-29/32" (221mm x 150mm)	4-3/4" (120mm)	5-5/8" (143mm)	4-3/4" (120mm)
Total depth	2-5/16" (59mm)	2-9/16" (65mm)	2-5/8" (67mm)	3-11/32" (85mm)	2-1/2" (64mm)	2-19/32" (66mm)	27/32" (21mm)
Mounting depth	2" (51mm)	2-9/32" (58mm)	2-5/16" (59mm)	2-31/32" (75mm)	2-9/32" (58mm)	2-5/16" (59mm)	2-9/32" (58mm)

SPECIFICATIONS — Russian

	CS-4	CS-5	CS-6	CS-69	CS-5C	CS-6C	CS-5C, CS-6C Tweeter
Type	4" (100mm) two-way speaker	5-1/4" (130mm) two-way speaker	165mm two-way speaker	6" x 9" (152mm x 230mm) three-way speaker	5-1/4" (130mm) two-way component system	165mm two-way component system	1" (25mm) component tweeter
Continuous power handling	30W	35W	45W	70W	40W	50W	--
Peak power handling	90W	105W	135W	210W	120W	150W	--
Frequency response	75Hz – 20kHz	70Hz – 20kHz	55Hz – 20kHz	40Hz – 20kHz	70Hz – 20kHz	55Hz – 20kHz	--
Nominal impedance	4 ohms	4 ohms	4 ohms	4 ohms	4 ohms	4 ohms	--
Sensitivity (2.83V/m)	90dB	93dB	93dB	94dB	92dB	92dB	--
External diameter	3-29/32" (99mm)	5-1/8" (130mm)	6-1/2" (166mm)	9-1/4" x 6-1/2" (235mm x 165mm)	5-1/8" (130mm)	6-1/2" (166mm)	1-13/16" (46mm)
Mounting cutout diameter	3-15/32" (88mm)	4-3/4" (120mm)	5-5/8" (143mm)	8-23/32" x 5-29/32" (221mm x 150mm)	4-3/4" (120mm)	5-5/8" (143mm)	4-3/4" (120mm)
Total depth	2-5/16" (59mm)	2-9/16" (65mm)	2-5/8" (67mm)	3-11/32" (85mm)	2-1/2" (64mm)	2-19/32" (66mm)	27/32" (21mm)
Mounting depth	2" (51mm)	2-9/32" (58mm)	2-5/16" (59mm)	2-31/32" (75mm)	2-9/32" (58mm)	2-5/16" (59mm)	2-9/32" (58mm)

SPECIFICATIONS — Spanish

	CS-4	CS-5	CS-6	CS-69	CS-5C	CS-6C	CS-5C, CS-6C Tweeter
Type	4" (100mm) two-way speaker	5-1/4" (130mm) two-way speaker	165mm two-way speaker	6" x 9" (152mm x 230mm) three-way speaker	5-1/4" (130mm) two-way component system	165mm two-way component system	1" (25mm) component tweeter
Continuous power handling	30W	35W	45W	70W	40W	50W	--
Peak power handling	90W	105W	135W	210W	120W	150W	--
Frequency response	75Hz – 20kHz	70Hz – 20kHz	55Hz – 20kHz	40Hz – 20kHz	70Hz – 20kHz	55Hz – 20kHz	--
Nominal impedance	4 ohms	4 ohms	4 ohms	4 ohms	4 ohms	4 ohms	--
Sensitivity (2.83V/m)	90dB	93dB	93dB	94dB	92dB	92dB	--
External diameter	3-29/32" (99mm)	5-1/8" (130mm)	6-1/2" (166mm)	9-1/4" x 6-1/2" (235mm x 165mm)	5-1/8" (130mm)	6-1/2" (166mm)	1-13/16" (46mm)
Mounting cutout diameter	3-15/32" (88mm)	4-3/4" (120mm)	5-5/8" (143mm)	8-23/32" x 5-29/32" (221mm x 150mm)	4-3/4" (120mm)	5-5/8" (143mm)	4-3/4" (120mm)
Total depth	2-5/16" (59mm)	2-9/16" (65mm)	2-5/8" (67mm)	3-11/32" (85mm)	2-1/2" (64mm)	2-19/32" (66mm)	27/32" (21mm)
Mounting depth	2" (51mm)	2-9/32" (58mm)	2-5/16" (59mm)	2-31/32" (75mm)	2-9/32" (58mm)	2-5/16" (59mm)	2-9/32" (58mm)

SPECIFICATIONS — Polish

	CS-4	CS-5	CS-6	CS-69	CS-5C	CS-6C	CS-5C, CS-6C Tweeter
Type	4" (100mm) two-way speaker	5-1/4" (130mm) two-way speaker	165mm two-way speaker	6" x 9" (152mm x 230mm) three-way speaker	5-1/4" (130mm) two-way component system	165mm two-way component system	1" (25mm) component tweeter
Continuous power handling	30W	35W	45W	70W	40W	50W	--
Peak power handling	90W	105W	135W	210W	120W	150W	--
Frequency response	75Hz – 20kHz	70Hz – 20kHz	55Hz – 20kHz	40Hz – 20kHz	70Hz – 20kHz	55Hz – 20kHz	--
Nominal impedance	4 ohms	4 ohms	4 ohms	4 ohms	4 ohms	4 ohms	--
Sensitivity (2.83V/m)	90dB	93dB	93dB	94dB	92dB	92dB	--
External diameter	3-29/32" (99mm)	5-1/8" (130mm)	6-1/2" (166mm)	9-1/4" x 6-1/2" (235mm x 165mm)	5-1/8" (130mm)	6-1/2" (166mm)	1-13/16" (46mm)
Mounting cutout diameter	3-15/32" (88mm)	4-3/4" (120mm)	5-5/8" (143mm)	8-23/32" x 5-29/32" (221mm x 150mm)	4-3/4" (120mm)	5-5/8" (143mm)	4-3/4" (120mm)
Total depth	2-5/16" (59mm)	2-9/16" (65mm)	2-5/8" (67mm)	3-11/32" (85mm)	2-1/2" (64mm)	2-19/32" (66mm)	27/32" (21mm)
Mounting depth	2" (51mm)	2-9/32" (58mm)	2-5/16" (59mm)	2-31/32" (75mm)	2-9/32" (58mm)	2-5/16" (59mm)	2-9/32" (58mm)

SPECIFICATIONS — French

	CS-4	CS-5	CS-6	CS-69	CS-5C	CS-6C	CS-5C, CS-6C Tweeter
Type	4" (100mm) two-way speaker	5-1/4" (130mm) two-way speaker	165mm two-way speaker	6" x 9" (152mm x 230mm) three-way speaker	5-1/4" (130mm) two-way component system	165mm two-way component system	1" (25mm) component tweeter
Continuous power handling	30W	35W	45W	70W	40W	50W	--
Peak power handling	90W	105W	135W	210W	120W	150W	--
Frequency response	75Hz – 20kHz	70Hz – 20kHz	55Hz – 20kHz	40Hz – 20kHz	70Hz – 20kHz	55Hz – 20kHz	--
Nominal impedance	4 ohms	4 ohms	4 ohms	4 ohms	4 ohms	4 ohms	--
Sensitivity (2.83V/m)	90dB	93dB	93dB	94dB	92dB	92dB	--
External diameter	3-29/32" (99mm)	5-1/8" (130mm)	6-1/2" (166mm)	9-1/4" x 6-1/2" (235mm x 165mm)	5-1/8" (130mm)	6-1/2" (166mm)	1-13/16" (46mm)
Mounting cutout diameter	3-15/32" (88mm)	4-3/4" (120mm)	5-5/8" (143mm)	8-23/32" x 5-29/32" (221mm x 150mm)	4-3/4" (120mm)	5-5/8" (143mm)	4-3/4" (120mm)
Total depth	2-5/16" (59mm)	2-9/16" (65mm)	2-5/8" (67mm)	3-11/32" (85mm)	2-1/2" (64mm)	2-19/32" (66mm)	27/32" (21mm)
Mounting depth	2" (51mm)	2-9/32" (58mm)	2-5/16" (59mm)	2-31/32" (75mm)	2-9/32" (58mm)	2-5/16" (59mm)	2-9/32" (58mm)

SPECIFICATIONS — Swedish

	CS-4	CS-5	CS-6	CS-69	CS-5C	CS-6C	CS-5C, CS-6C Tweeter
Type	4" (100mm) two-way speaker	5-1/4" (130mm) two-way speaker	165mm two-way speaker	6" x 9" (152mm x 230mm) three-way speaker	5-1/4" (130mm) two-way component system	165mm two-way component system	1" (25mm) component tweeter
Continuous power handling	30W	35W	45W	70W	40W	50W	--
Peak power handling	90W	105W	135W	210W	120W	150W	--
Frequency response	75Hz – 20kHz	70Hz – 20kHz	55Hz – 20kHz	40Hz – 20kHz	70Hz – 20kHz	55Hz – 20kHz	--
Nominal impedance	4 ohms	4 ohms	4 ohms	4 ohms	4 ohms	4 ohms	--
Sensitivity (2.83V/m)	90dB	93dB	93dB	94dB	92dB	92dB	--
External diameter	3-29/32" (99mm)	5-1/8" (130mm)	6-1/2" (166mm)	9-1/4" x 6-1/2" (235mm x 165mm)	5-1/8" (130mm)	6-1/2" (166mm)	1-13/16" (46mm)
Mounting cutout diameter	3-15/32" (88mm)	4-3/4" (120mm)	5-5/8" (143mm)	8-23/32" x 5-29/32" (221mm x 150mm)	4-3/4" (120mm)	5-5/8" (143mm)	4-3/4" (120mm)
Total depth	2-5/16" (59mm)	2-9/16" (65mm)	2-5/8" (67mm)	3-11/32" (85mm)	2-1/2" (64mm)	2-19/32" (66mm)	27/32" (21mm)
Mounting depth	2" (51mm)	2-9/32" (58mm)	2-5/16" (59mm)	2-31/32" (75mm)	2-9/32" (58mm)	2-5/16" (59mm)	2-9/32" (58mm)

SPECIFICATIONS — Italian

	CS-4	CS-5	CS-6	CS-69	CS-5C	CS-6C	CS-5C, CS-6C Tweeter
Type	4" (100mm) two-way speaker	5-1/4" (130mm) two-way speaker	165mm two-way speaker	6" x 9" (152mm x 230mm) three-way speaker	5-1/4" (130mm) two-way component system	165mm two-way component system	1" (25mm) component tweeter
Continuous power handling	30W	35W	45W	70W	40W	50W	--
Peak power handling	90W	105W	135W	210W	120W	150W	--
Frequency response	75Hz – 20kHz	70Hz – 20kHz	55Hz – 20kHz	40Hz – 20kHz	70Hz – 20kHz	55Hz – 20kHz	--
Nominal impedance	4 ohms	4 ohms	4 ohms	4 ohms	4 ohms	4 ohms	--
Sensitivity (2.83V/m)	90dB	93dB	93dB	94dB	92dB	92dB	--
External diameter	3-29/32" (99mm)	5-1/8" (130mm)	6-1/2" (166mm)	9-1/4" x 6-1/2" (235mm x 165mm)	5-1/8" (130mm)	6-1/2" (166mm)	1-13/16" (46mm)
Mounting cutout diameter	3-15/32" (88mm)	4-3/4" (120mm)	5-5/8" (143mm)	8-23/32" x 5-29/32" (221mm x 150mm)	4-3/4" (120mm)	5-5/8" (143mm)	4-3/4" (120mm)
Total depth	2-5/16" (59mm)	2-9/16" (65mm)	2-5/8" (67mm)	3-11/32" (85mm)	2-1/2" (64mm)	2-19/32" (66mm)	27/32" (21mm)
Mounting depth	2" (51mm)	2-9/32" (58mm)	2-5/16" (59mm)	2-31/32" (75mm)	2-9/32" (58mm)	2-5/16" (59mm)	2-9/32" (58mm)

SPECIFICATIONS — Turkish

	CS-4	CS-5	CS-6	CS-69	CS-5C	CS-6C	CS-5C, CS-6C Tweeter
Type	4" (100mm) two-way speaker	5-1/4" (130mm) two-way speaker	165mm two-way speaker	6" x 9" (152mm x 230mm) three-way speaker	5-1/4" (130mm) two-way component system	165mm two-way component system	1" (25mm) component tweeter
Continuous power handling	30W	35W	45W	70W	40W	50W	--
Peak power handling	90W	105W	135W	210W	120W	150W	--
Frequency response	75Hz – 20kHz	70Hz – 20kHz	55Hz – 20kHz	40Hz – 20kHz	70Hz – 20kHz	55Hz – 20kHz	--
Nominal impedance	4 ohms	4 ohms	4 ohms	4 ohms	4 ohms	4 ohms	--
Sensitivity (2.83V/m)	90dB	93dB	93dB	94dB	92dB	92dB	--
External diameter	3-29/32" (99mm)	5-1/8" (130mm)	6-1/2" (166mm)	9-1/4" x 6-1/2" (235mm x 165mm)	5-1/8" (130mm)	6-1/2" (166mm)	1-13/16" (46mm)
Mounting cutout diameter	3-15/32" (88mm)	4-3/4" (120mm)	5-5/8" (143mm)	8-23/32" x 5-29/32" (221mm x 150mm)	4-3/4" (120mm)	5-5/8" (143mm)	4-3/4" (120mm)
Total depth	2-5/16" (59mm)	2-9/16" (65mm)	2-5/8" (67mm)	3-11/32" (85mm)	2-1/2" (64mm)	2-19/32" (66mm)	27/32" (21mm)
Mounting depth	2" (51mm)	2-9/32" (58mm)	2-5/16" (59mm)	2-31/32" (75mm)	2-9/32" (58mm)	2-5/16" (59mm)	2-9/32" (58mm)

SPECIFICATIONS — German

	CS-4	CS-5	CS-6	CS-69	CS-5C	CS-6C	CS-5C, CS-6C Tweeter
Type	4" (100mm) two-way speaker	5-1/4" (130mm) two-way speaker	165mm two-way speaker	6" x 9" (152mm x 230mm) three-way speaker	5-1/4" (130mm) two-way component system	165mm two-way component system	1" (25mm) component tweeter
Continuous power handling	30W	35W	45W	70W	40W	50W	--
Peak power handling	90W	105W	135W	210W	120W	150W	--
Frequency response	75Hz – 20kHz	70Hz – 20kHz	55Hz – 20kHz	40Hz – 20kHz	70Hz – 20kHz	55Hz – 20kHz	--
Nominal impedance	4 ohms	4 ohms	4 ohms	4 ohms	4 ohms	4 ohms	--
Sensitivity (2.83V/m)	90dB	93dB	93dB	94dB	92dB	92dB	--
External diameter	3-29/32" (99mm)	5-1/8" (130mm)	6-1/2" (166mm)	9-1/4" x 6-1/2" (235mm x 165mm)	5-1/8" (130mm)	6-1/2" (166mm)	1-13/16" (46mm)
Mounting cutout diameter	3-15/32" (88mm)	4-3/4" (120mm)	5-5/8" (143mm)	8-23/32" x 5-29/32" (221mm x 150mm)	4-3/4" (120mm)	5-5/8" (143mm)	4-3/4" (120mm)
Total depth	2-5/16" (59mm)	2-9/16" (65mm)	2-5/8" (67mm)	3-11/32" (85mm)	2-1/2" (64mm)	2-19/32" (66mm)	27/32" (21mm)
Mounting depth	2" (51mm)	2-9/32" (58mm)	2-5/16" (59mm)	2-31/32" (75mm)	2-9/32" (58mm)	2-5/16" (59mm)	2-9/32" (58mm)

SPECIFICATIONS — S. Chinese

	CS-4	CS-5	CS-6	CS-69	CS-5C	CS-6C	CS-5C, CS-6C Tweeter
Type	4" (100mm) two-way speaker	5-1/4" (130mm) two-way speaker	165mm two-way speaker	6" x 9" (152mm x 230mm) three-way speaker	5-1/4" (130mm) two-way component system	165mm two-way component system	1" (25mm) component tweeter
Continuous power handling	30W	35W	45W	70W	40W	50W	--
Peak power handling	90W	105W	135W	210W	120W	150W	--
Frequency response	75Hz – 20kHz	70Hz – 20kHz	55Hz – 20kHz	40Hz – 20kHz	70Hz – 20kHz	55Hz – 20kHz	--
Nominal impedance	4 ohms	4 ohms	4 ohms	4 ohms	4 ohms	4 ohms	--
Sensitivity (2.83V/m)	90dB	93dB	93dB	94dB	92dB	92dB	--
External diameter	3-29/32" (99mm)	5-1/8" (130mm)	6-1/2" (166mm)	9-1/4" x 6-1/2" (235mm x 165mm)	5-1/8" (130mm)	6-1/2" (166mm)	1-13/16" (46mm)
Mounting cutout diameter	3-15/32" (88mm)	4-3/4" (120mm)	5-5/8" (143mm)	8-23/32" x 5-29/32" (221mm x 150mm)	4-3/4" (120mm)	5-5/8" (143mm)	4-3/4" (120mm)
Total depth	2-5/16" (59mm)	2-9/16" (65mm)	2-5/8" (67mm)	3-11/32" (85mm)	2-1/2" (64mm)	2-19/32" (66mm)	27/32" (21mm)
Mounting depth	2" (51mm)	2-9/32" (58mm)	2-5/16" (59mm)	2-31/32" (75mm)	2-9/32" (58mm)	2-5/16" (59mm)	2-9/32" (58mm)

SPECIFICATIONS — Dutch

	CS-4	CS-5	CS-6	CS-69	CS-5C	CS-6C	CS-5C, CS-6C Tweeter
Type	4" (100mm) two-way speaker	5-1/4" (130mm) two-way speaker	165mm two-way speaker	6" x 9" (152mm x 230mm) three-way speaker	5-1/4" (130mm) two-way component system	165mm two-way component system	1" (25mm) component tweeter
Continuous power handling	30W	35W	45W	70W	40W	50W	--
Peak power handling	90W	105W	135W	210W	120W	150W	--
Frequency response	75Hz – 20kHz	70Hz – 20kHz	55Hz – 20kHz	40Hz – 20kHz	70Hz – 20kHz	55Hz – 20kHz	--
Nominal impedance	4 ohms	4 ohms	4 ohms	4 ohms	4 ohms	4 ohms	--
Sensitivity (2.83V/m)	90dB	93dB	93dB	94dB	92dB	92dB	--
External diameter	3-29/32" (99mm)	5-1/8" (130mm)	6-1/2" (166mm)	9-1/4" x 6-1/2" (235mm x 165mm)	5-1/8" (130mm)	6-1/2" (166mm)	1-13/16" (46mm)
Mounting cutout diameter	3-15/32" (88mm)	4-3/4" (120mm)	5-5/8" (143mm)	8-23/32" x 5-29/32" (221mm x 150mm)	4-3/4" (120mm)	5-5/8" (143mm)	4-3/4" (120mm)
Total depth	2-5/16" (59mm)	2-9/16" (65mm)	2-5/8" (67mm)	3-11/32" (85mm)	2-1/2" (64mm)	2-19/32" (66mm)	27/32" (21mm)
Mounting depth	2" (51mm)	2-9/32" (58mm)	2-5/16" (59mm)	2-31/32" (75mm)	2-9/32" (58mm)	2-5/16" (59mm)	2-9/32" (58mm)

SPECIFICATIONS — T. Chinese

	CS-4	CS-5	CS-6	CS-69	CS-5C	CS-6C	CS-5C, CS-6C Tweeter
Type	4" (100mm) two-way speaker	5-1/4" (130mm) two-way speaker	165mm two-way speaker	6" x 9" (152mm x 230mm) three-way speaker	5-1/4" (130mm) two-way component system	165mm two-way component system	1" (25mm) component tweeter
Continuous power handling	30W	35W	45W	70W	40W	50W	--
Peak power handling	90W	105W	135W	210W	120W	150W	--
Frequency response	75Hz – 20kHz	70Hz – 20kHz	55Hz – 20kHz	40Hz – 20kHz	70Hz – 20kHz	55Hz – 20kHz	--
Nominal impedance	4 ohms	4 ohms	4 ohms	4 ohms	4 ohms	4 ohms	--
Sensitivity (2.83V/m)	90dB	93dB	93dB	94dB	92dB	92dB	--
External diameter	3-29/32" (99mm)	5-1/8" (130mm)	6-1/2" (166mm)	9-1/4" x 6-1/2" (235mm x 165mm)	5-1/8" (130mm)	6-1/2" (166mm)	1-13/16" (46mm)
Mounting cutout diameter	3-15/32" (88mm)	4-3/4" (120mm)	5-5/8" (143mm)	8-23/32" x 5-29/32" (221mm x 150mm)	4-3/4" (120mm)	5-5/8" (143mm)	4-3/4" (120mm)
Total depth	2-5/16" (59mm)	2-9/16" (65mm)	2-5/8" (67mm)	3-11/32" (85mm)	2-1/2" (64mm)	2-19/32" (66mm)	27/32" (21mm)
Mounting depth	2" (51mm)	2-9/32" (58mm)	2-5/16" (59mm)	2-31/32" (75mm)	2-9/32" (58mm)	2-5/16" (59mm)	2-9/32" (58mm)

SPECIFICATIONS — Danish

	CS-4	CS-5	CS-6	CS-69	CS-5C	CS-6C	CS-5C, CS-6C Tweeter
Type	4" (100mm) two-way speaker	5-1/4" (130mm) two-way speaker	165mm two-way speaker	6" x 9" (152mm x 230mm) three-way speaker	5-1/4" (130mm) two-way component system	165mm two-way component system	1" (25mm) component tweeter
Continuous power handling	30W	35W	45W	70W	40W	50W	--
Peak power handling	90W	105W	135W	210W	120W	150W	--
Frequency response	75Hz – 20kHz	70Hz – 20kHz	55Hz – 20kHz	40Hz – 20kHz	70Hz – 20kHz	55Hz – 20kHz	--
Nominal impedance	4 ohms	4 ohms	4 ohms	4 ohms	4 ohms	4 ohms	--
Sensitivity (2.83V/m)	90dB	93dB	93dB	94dB	92dB	92dB	--
External diameter	3-29/32" (99mm)	5-1/8" (130mm)	6-1/2" (166mm)	9-1/4" x 6-1/2" (235mm x 165mm)	5-1/8" (130mm)	6-1/2" (166mm)	1-13/16" (46mm)
Mounting cutout diameter	3-15/32" (88mm)	4-3/4" (120mm)	5-5/8" (143mm)	8-23/32" x 5-29/32" (221mm x 150mm)	4-3/4" (120mm)	5-5/8" (143mm)	4-3/4" (120mm)
Total depth	2-5/16" (59mm)	2-9/16" (65mm)	2-5/8" (67mm)	3-11/32" (85mm)	2-1/2" (64mm)	2-19/32" (66mm)	27/32" (21mm)
Mounting depth	2" (51mm)	2-9/32" (58mm)	2-5/16" (59mm)	2-31/32" (75mm)	2-9/32" (58mm)	2-5/16" (59mm)	2-9/32" (58mm)

SPECIFICATIONS — Japanese

	CS-4	CS-5	CS-6	CS-69	CS-5C	CS-6C	CS-5C, CS-6C Tweeter
Type	4" (100mm) two-way speaker	5-1/4" (130mm) two-way speaker	165mm two-way speaker	6" x 9" (152mm x 230mm) three-way speaker	5-1/4" (130mm) two-way component system	165mm two-way component system	1" (25mm) component tweeter
Continuous power handling	30W	35W	45W	70W	40W	50W	--
Peak power handling	90W	105W	135W	210W	120W	150W	--
Frequency response	75Hz – 20kHz	70Hz – 20kHz	55Hz – 20kHz	40Hz – 20kHz	70Hz – 20kHz	55Hz – 20kHz	--
Nominal impedance	4 ohms	4 ohms	4 ohms	4 ohms	4 ohms	4 ohms	--
Sensitivity (2.83V/m)	90dB	93dB	93dB	94dB	92dB	92dB	--
External diameter	3-29/32" (99mm)	5-1/8" (130mm)	6-1/2" (166mm)	9-1/4" x 6-1/2" (235mm x 165mm)	5-1/8" (130mm)	6-1/2" (166mm)	1-13/16" (46mm)
Mounting cutout diameter	3-15/32" (88mm)	4-3/4" (120mm)	5-5/8" (143mm)	8-23/32" x 5-29/32" (221mm x 150mm)	4-3/4" (120mm)	5-5/8" (143mm)	4-3/