DIMENSIONS

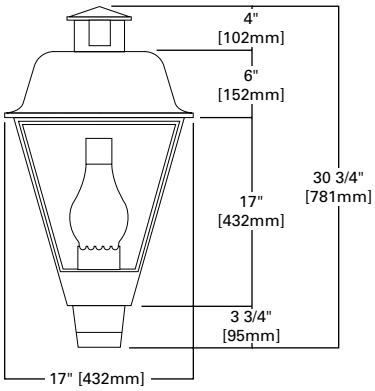

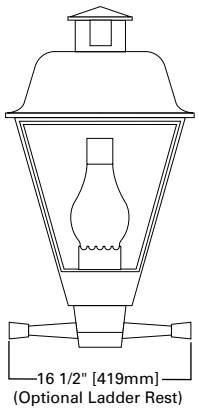

DESCRIPTION

Dayform Traditionaire™ outdoor luminaires display the old-fashioned charm of traditional area lighting, enhancing any setting with a distinctive styling. Graced with a visually appealing design form during the day, surroundings are well-lighted and safe at night. U.L. listed and CSA certified for wet locations.

As a decorative luminaire, the Dayform Traditionaire™ tastefully complements the architectural and environmental design of estates, parks, motels, restaurants, apartments, churches, institutions and roadways.

TRD
DAYFORM TRADITIONAIRE™

50-175W

Metal Halide

High Pressure Sodium

POST-TOP AREA LUMINAIRE

- Decorative cupola conceals optional photocontrol
- Specular aluminum reflector is available in three distributions
- Hinged, die-cast aluminum cover has steel hinge pins and captive cover-retaining screws
- Injection-molded contoured Polycarbonate lens panels are standard
- Aluminum ballast cover supports a decorative glass chimney
- Single-piece, die-cast aluminum housing has integral base and lens supports
- Integral self-aligning pole top fitter fits 3" O.D. poles or vertical tenons
- Approximate net weight: 20 lbs. (9 kgs.)

ORDERING INFORMATION

SAMPLE NUMBER: TRD-150-MH-120-2F-BK

Product Family
TRD=Dayform Traditionaire™

Lamp Wattage[1]
50=50W
70=70W
100=100W
150=150W
175=175W

Lamp Type
MH=Metal Halide
HPS=High Pressure Sodium

Voltage[2]
120=120V
208=208V
240=240V
277=277V
347=347V
480=480V
MT=Multi-Tap[3]
TT=Triple-Tap[4]

Distribution
2F=Type II Formed
3F=Type III Formed
5F=Type V Formed

Color
AP=Grey
BZ=Bronze
BK=Black
WH=White
GN=Hartford Green
DP=Dark Platinum
GM=Graphite Metallic

Options & Accessories
(See Below)

E.P.A. 2.6

Options[5]
R=NEMA Twistlock Photocontrol Receptacle
L=Lamp Included
S=Toolless Entry

Accessories[6]
OA/RA1016=NEMA Twistlock Photocontrol—Multi-Tap
OA/RA1027=NEMA Twistlock Photocontrol—480V
OA1201=NEMA Twistlock Photocontrol—347V
TA1BK=Ladder Rest

NOTES: 1 All Metal Halide lamps 150W and below are medium-base. 175W and above are mogul-base. **2** Product also available in non-US voltages and 50Hz for international markets. Consult factory for availability and ordering information. **3** Multi-Tap ballast is 120/208/240/277V wired 277V. **4** Triple-Tap ballast is 120/277/347V wired 347V. **5** Add as suffix in the order shown. **6** Order separately, replace XX with color suffix. **7** Specifications and dimensions subject to change without notice.