2323 Universal

Drop-In Post-Mix Dispenser

Features:

- Ice chest has 80 lb. capacity
- Foamed polyurethane insulation
- Key lock switch conveniently located on tower
- Large, extended drip tray provides extra room for cup staging and is removable for ease in cleaning
- High capacity 9/12 circuit sealed in 19'' x 21'' aluminum cold plate
- Comes standard with 5, 6 or 8 UF-1 fast flow electric valves (8 flavor requires two ambient syrups)
- Six 3/8'' barb syrup fittings, one 3/8'' for water, two 3/8'' for carbonated water
- Front inlet fitting location
- Available with or without lighted merchandiser
- Available with a cabinet stand

2323 Universal

Technical Specifications:

Drop-in Unit Countertop Cut-out: 23-1/4" x 23-1/4"

Electrical Rating: Dispensing valves 24 VAC (power supply requires 115V / 60 Hz / 1.5A)

Agency Listings:

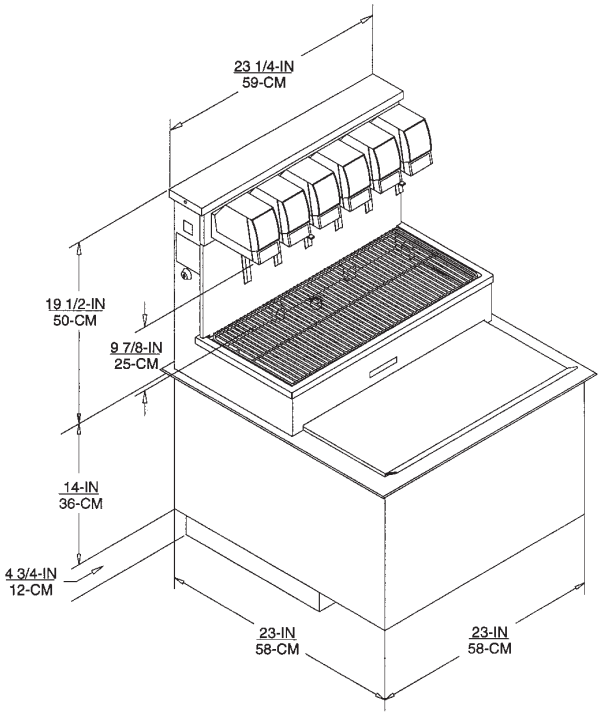

Model No.	Part No.	Description	Shipping Weight
CB2323-AK5	631100048	Drop-in dispenser with five fast flow UF-1 valves, 80 lb. bin	200 lbs. / 91 kgs.
CB2323-AK6	631100049	Drop-in dispenser with six fast flow UF-1 valves, 80 lb. bin	200 lbs. / 91 kgs.
CB2323-AK8	631100050	Drop-in dispenser with eight fast flow UF-1 valves, 80 lb. bin	201 lbs. / 92 kgs.
CB2323	162111002	Drop-in ice chest with sealed in nine circuit cold plate slotted rim for mounting of Universal Tower	145 lbs. / 66 kgs
C-2123	162111004	Drop-in ice chest with sealed in nine circuit cold plate	145 lbs. / 66 kgs.
C-2123	162540000	Drop-in ice chest without sealed in cold plate	45 lbs. / 20 kgs.
	165492000	Cabinet stand – turns 2323 drop-in into a freestanding unit	61 lbs. / 28 kgs.

For more information or to place an order, contact your sales representative or authorized distributor.

In the US:
Phone: 1-800-238-3600
Fax: 1-800-535-4235
Outside the US:
Phone: 1-763-421-6120
Fax: 1-763-422-3297

IMI Cornelius Inc.
One Cornelius Place
Anoka, MN 55303-6234
USA

© 2001 IMI Cornelius