Reebok 1000 ZX

Model No. RBEL9906.1
Serial No. _____

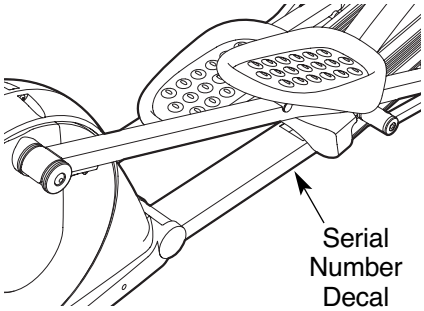

USER'S MANUAL

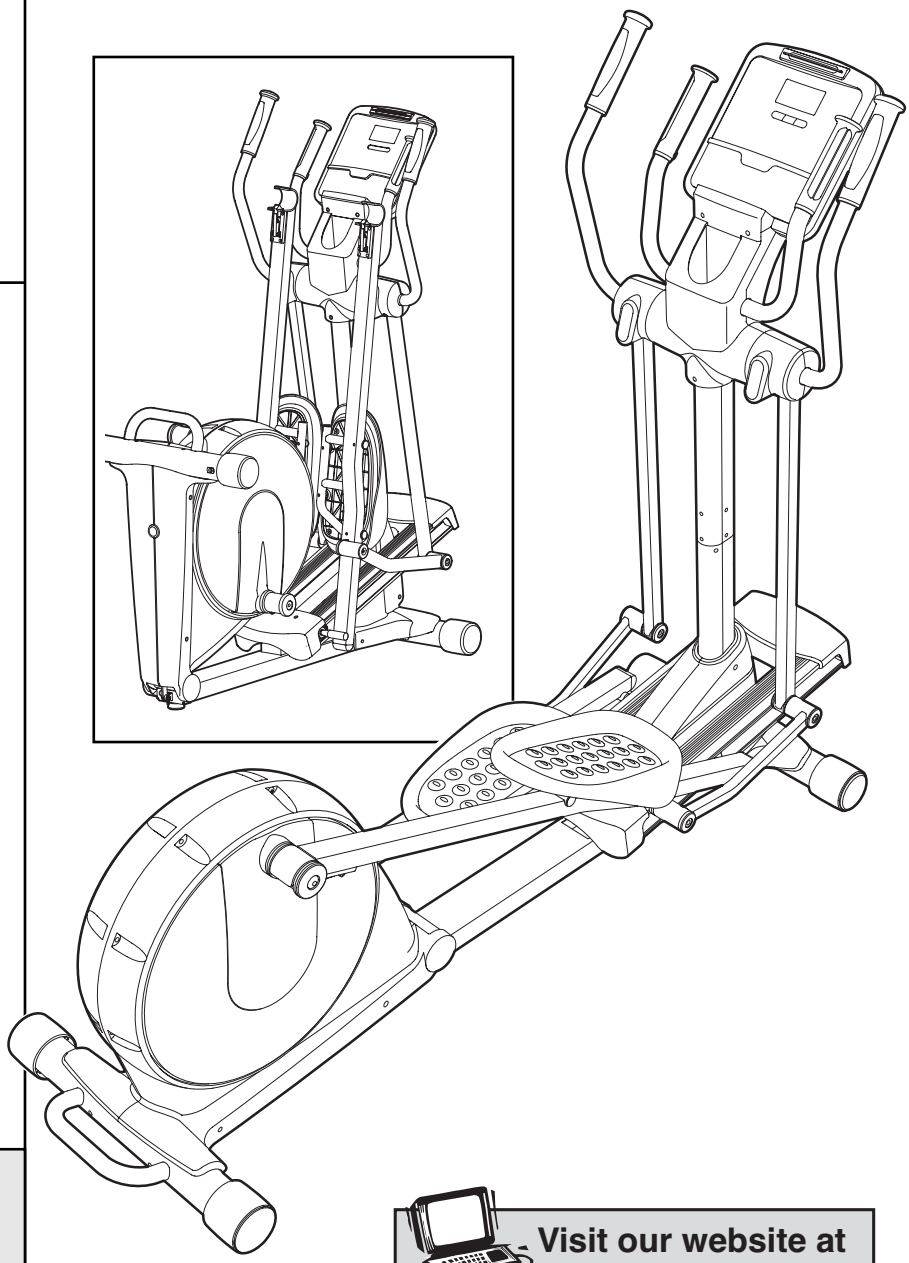

QUESTIONS?

As a manufacturer, we are committed to providing complete customer satisfaction. If you have questions, or if parts are damaged or missing, PLEASE CONTACT OUR CUSTOMER SERVICE DEPARTMENT DIRECTLY.

CALL TOLL-FREE:
1-877-994-4999
Mon.–Fri., 6 a.m.–6 p.m. MST

ON THE WEB:
www.reebokservice.com

⚠ CAUTION

Read all precautions and instructions in this manual before using this equipment. Keep this manual for future reference.

Visit our website at

www.reebokhomefitness.com

new products, prizes, fitness tips, and much more!

Reebok 1000 ZX

TABLE OF CONTENTS

IMPORTANT PRECAUTIONS 3
BEFORE YOU BEGIN 4
ASSEMBLY 5
HOW TO USE THE ELLIPTICAL EXERCISER 11
MAINTENANCE AND TROUBLESHOOTING 22
CONDITIONING GUIDELINES 23
PART LIST 24
EXPLODED DRAWING 26
HOW TO ORDER REPLACEMENT PARTS . . . . . Back Cover
LIMITED WARRANTY . . . . . Back Cover

REEBOK and the Vector Logo are registered trademarks and service marks of Reebok. This product is manufactured and distributed under license from Reebok International.

IMPORTANT PRECAUTIONS

⚠ WARNING: To reduce the risk of serious injury, read the following important precautions before using the elliptical exerciser.

1. **Read all instructions in this manual and all warnings on the elliptical exerciser before using the elliptical exerciser. Use the elliptical exercise only as described in this manual.**

2. **It is the responsibility of the owner to ensure that all users of the elliptical exerciser are adequately informed of all precautions.**

3. **The elliptical exerciser is intended for home use only. Do not use the elliptical exerciser in a commercial, rental, or institutional setting.**

4. **Keep the elliptical exerciser indoors, away from moisture and dust. Place the elliptical exerciser on a level surface, with a mat beneath it to protect the floor or carpet. Make sure that there is enough clearance around the elliptical exerciser to mount, dismount, and use it.**

5. **Inspect and properly tighten all parts regularly. Replace any worn parts immediately.**

6. **Keep children under age 12 and pets away from the elliptical exerciser at all times.**

7. **The elliptical exerciser should not be used by persons weighing more than 325 pounds.**

8. **Wear appropriate exercise clothes while using the elliptical exerciser. Always wear athletic shoes for foot protection while exercising.**

9. **Hold the handgrip pulse sensors or the upper body arms when mounting, dismounting, or using the elliptical exerciser.**

10. **The pulse sensor is not a medical device. Various factors may affect the accuracy of heart rate readings. The pulse sensor is intended only as an exercise aid in determining heart rate trends in general.**

11. **Keep your back straight while using the elliptical exerciser; do not arch your back.**

12. **If you feel pain or dizziness while exercising, stop immediately and cool down.**

13. **When you stop exercising, allow the pedals to slowly come to a stop.**

14. **The warning decals shown on page 4 have been placed on the elliptical exerciser in the locations shown. If a decal is missing or illegible, call the toll-free telephone number on the front cover of this manual and order a free replacement decal. Apply the decal in the location shown.**

⚠ WARNING: Before beginning this or any exercise program, consult your physician. This is especially important for persons over the age of 35 or persons with pre-existing health problems. Read all instructions before using. ICON assumes no responsibility for personal injury or property damage sustained by or through the use of this product.

BEFORE YOU BEGIN

Thank you for purchasing the revolutionary REEBOK® 1000 ZX elliptical exerciser. The 1000 ZX elliptical exerciser provides an array of features designed to make your workouts at home more effective and enjoyable—and when you're not exercising, the unique elliptical exerciser can be folded out of the way.

For your benefit, read this manual carefully before you use the elliptical exerciser. If you have questions after reading this manual, please see the front cover of this manual. To help us assist you, note the product model number and serial number before contacting us. The model number is RBEL9906.1. The serial number can be found on a decal attached to the elliptical exerciser (see the front cover of this manual for the location of the decal).

To avoid a registration fee for any service needed under warranty, you must register the elliptical exerciser at www.reebokservice.com/registration.

Before reading further, please familiarize yourself with the parts that are labeled in the drawing below.

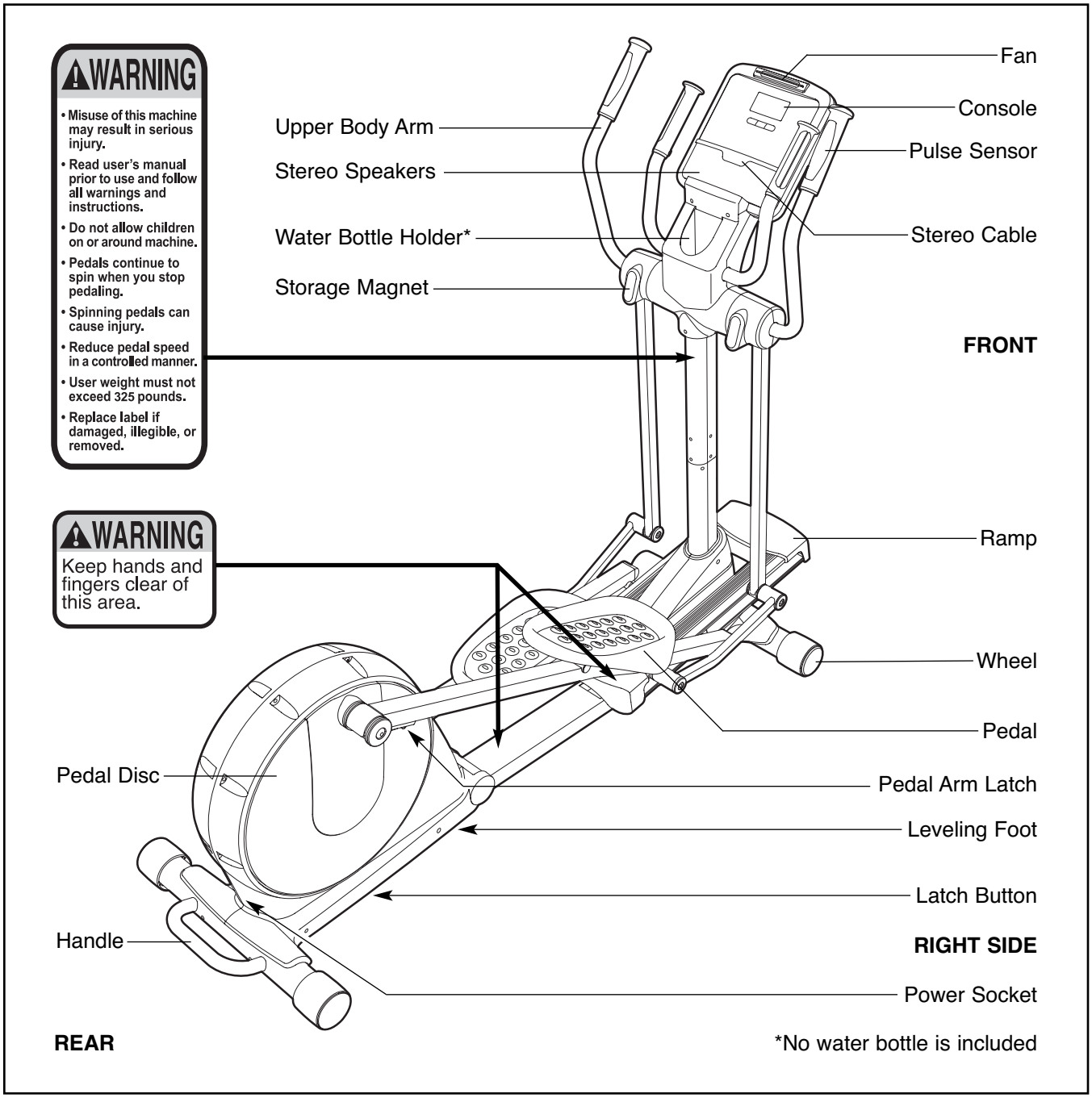

ASSEMBLY

To hire an authorized service technician to assemble the elliptical exerciser, call toll-free 1-800-445-2480.

Assembly requires two persons. Place all parts of the elliptical exerciser in a cleared area and remove the packing materials. Do not dispose of the packing materials until assembly is completed.

Assembly requires the included hex keys and your own Phillips screwdriver and rubber mallet .

As you assemble the elliptical exerciser, use the drawings below to identify small parts. The number in parentheses below each drawing is the key number of the part, from the PART LIST on pages 24 and 25. The number following the parentheses is the quantity needed for assembly. **Note: Some small parts may have been preassembled. If a part is not in the parts bag, check to see if it has been preassembled.**

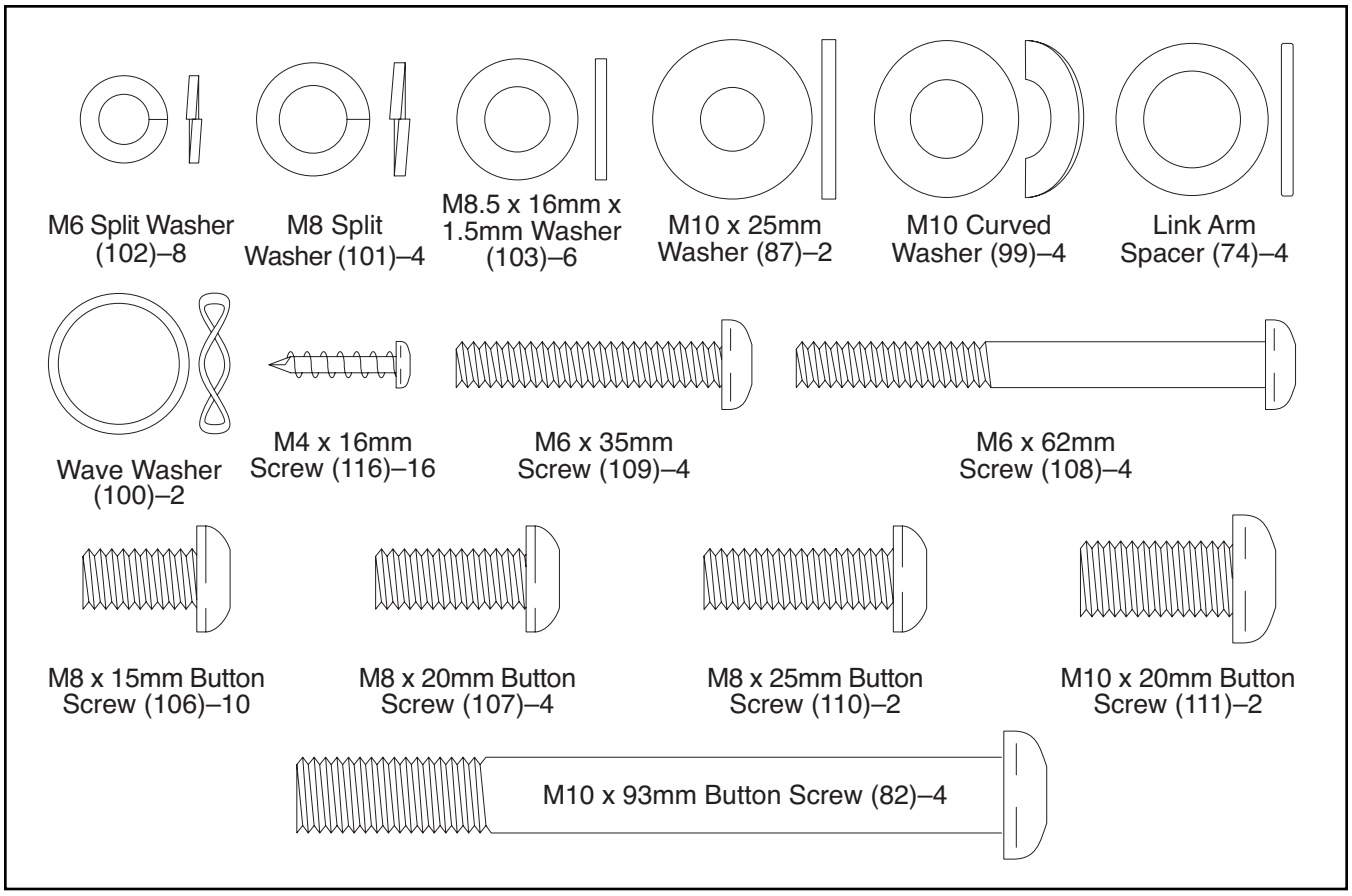

1. While another person lifts the front of the Frame (1), attach the Front Stabilizer (4) to the Frame with two M10 x 93mm Button Screws (82) and two M10 Curved Washers (99).

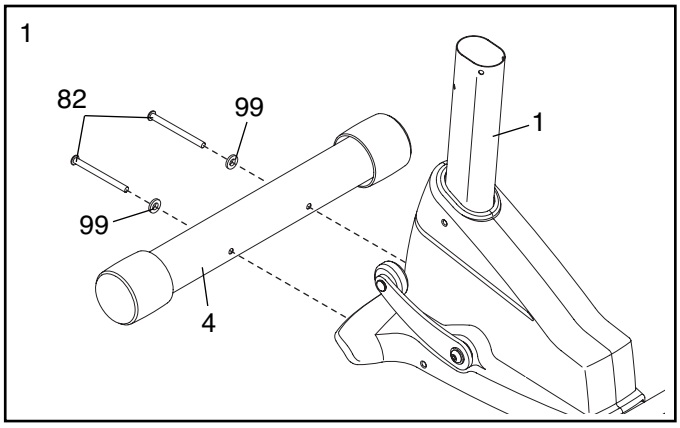

2. While another person lifts the Folding Frame (2), attach the Rear Stabilizer (3) to the Folding Frame with two M10 x 93mm Button Screws (82) and two M10 Curved Washers (99). Next, tighten the Center Foot (95) into the Frame (1).

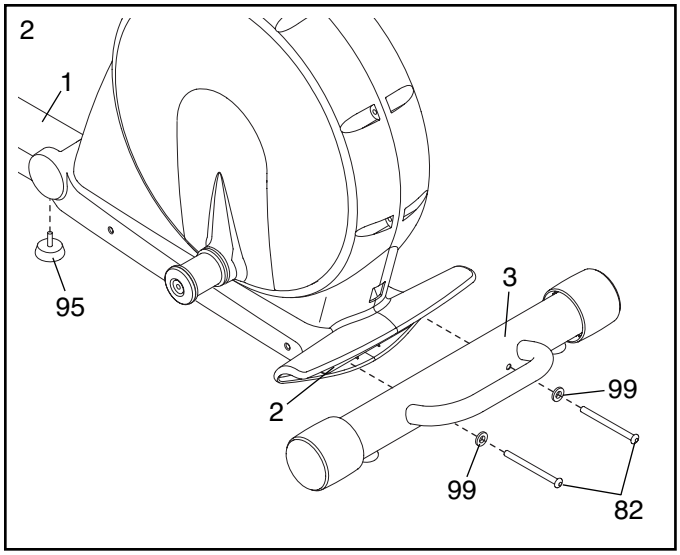

3. Attach the Front Ramp Cover (6) to the Ramp (5) with four M4 x 16mm Screws (116).

   Slide an M10 x 25mm Washer (87) onto an M10 x 20mm Button Screw (111). Tighten the Button Screw into one end of the Ramp Axle (72). Apply a small amount of the included grease to the Ramp Axle.

   Orient the Ramp (5) as shown. Align the lower end of the Ramp with the welded tube on the Frame (1). Insert the Ramp Axle (72) into the Ramp and the welded tube.

   Slide an M10 x 25mm Washer (87) onto an M10 x 20mm Button Screw (111). Tighten the Button Screw into the open end of the Ramp Axle (72).

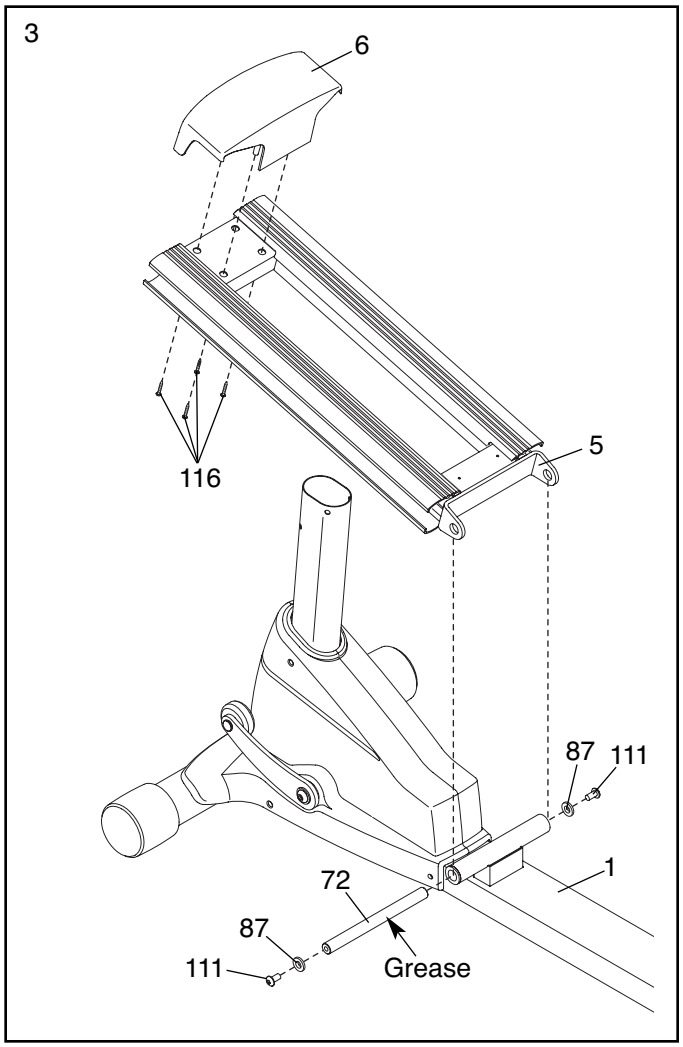

4. Identify the Left Pedal (34) and the Left Pedal Arm (32), which are marked with stickers.

   Attach the Left Pedal (34) to the Left Pedal Arm (32) with two M6 x 62mm Screws (108), two M6 x 35mm Screws (109), and four M6 Split Washers (102).

   Attach the Right Pedal (not shown) to the Right Pedal Arm (not shown) in the same way.

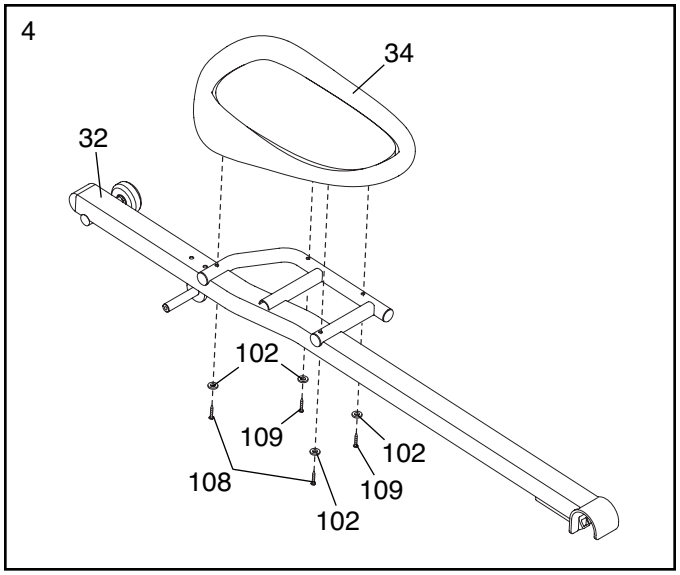

5. Insert the Roller (38) on the Left Pedal Arm (32) and the Roller on the Right Pedal Arm (33) into the sides of the Ramp (5).

   Attach the Rear Ramp Cover (7) to the Ramp (5) with two M4 x 16mm Screws (116).

   See the inset drawing. Lift the Pedal Arm Latch (41) on the Left Pedal Arm (32) and set the end of the Left Pedal Arm on the left Crank Bushing Sleeve (54). Release the Pedal Arm Latch; make sure that the Left Pedal Arm is securely connected to the Crank Bushing Sleeve.

   Connect the Right Pedal Arm (33) to the right Crank Bushing Sleeve (not shown) in the same way.

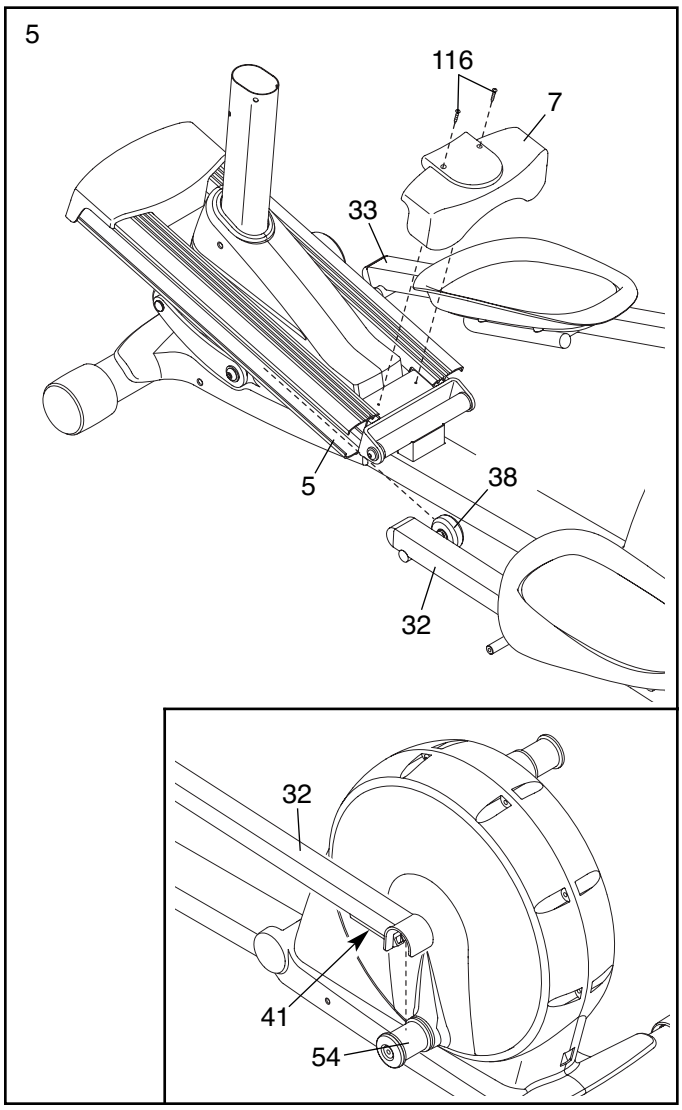

6. While another person holds the Upright (10) near the Frame (1), connect the Upper Wire Harness (65) to the Lower Wire Harness (64).

   Carefully insert the Upright (10) into the Frame (1); **be careful not to damage the Wire Harnesses (64, 65).** Attach the Upright with four M8 x 20mm Button Screws (107) and four M8 Split Washers (101).

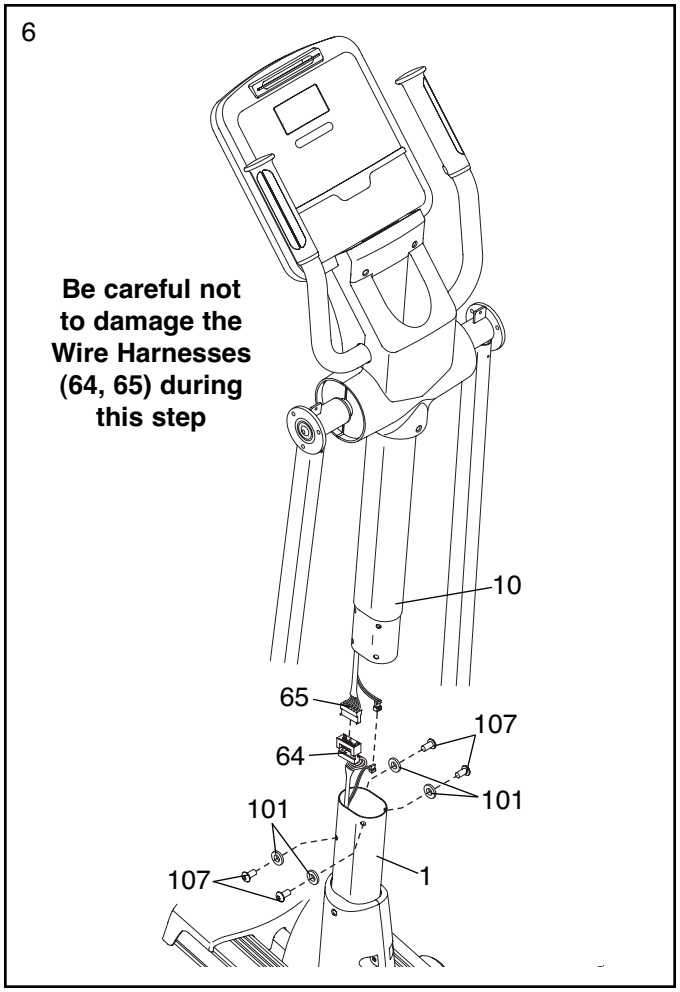

7. Attach the Left Upper Body Arm (22) to the left Upper Body Leg (24) with three M8 x 15mm Button Screws (106).

   Attach the Right Upper Body Arm (23) in the same way.

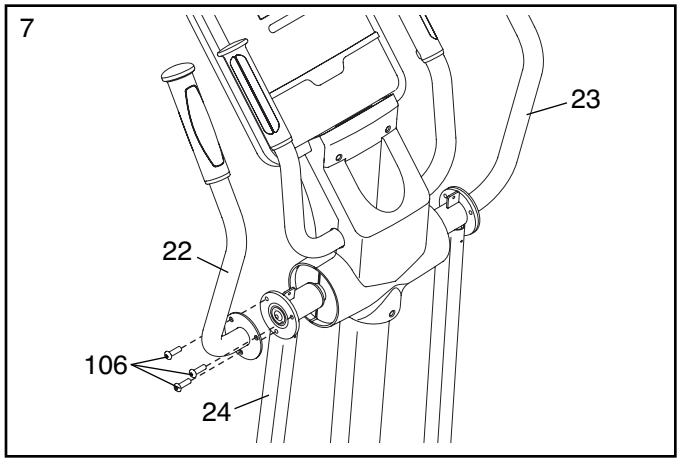

8. Hold the Left Rear Upper Body Cover (26) and the Left Front Upper Body Cover (27) around the left Upper Body Leg (24). Attach the Upper Body Covers with five M4 x 16mm Screws (116).

   Attach the Right Rear Upper Body Cover (28) and the Right Front Upper Body Cover (29) in the same way.

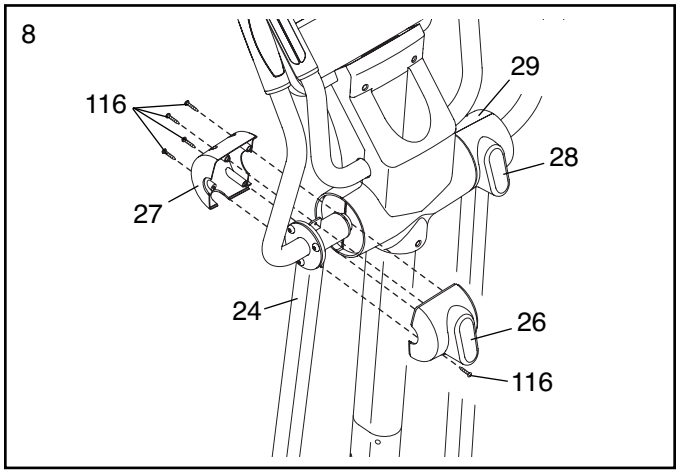

9. Apply a small amount of grease to the axle on the Left Link Arm (30), to the axle on the Left Pedal Arm (32), and to a Wave Washer (100).

   Slide the Wave Washer (100) onto the axle on the Left Pedal Arm (32). Next, slide a Link Arm Spacer (74) onto the axle on the Left Link Arm (30).

   Then, insert the axle on the Left Link Arm (30) into the left Upper Body Leg (24) while sliding the Left Link Arm onto the axle on the Left Pedal Arm (32).

   Repeat this step with the Right Link Arm (31).

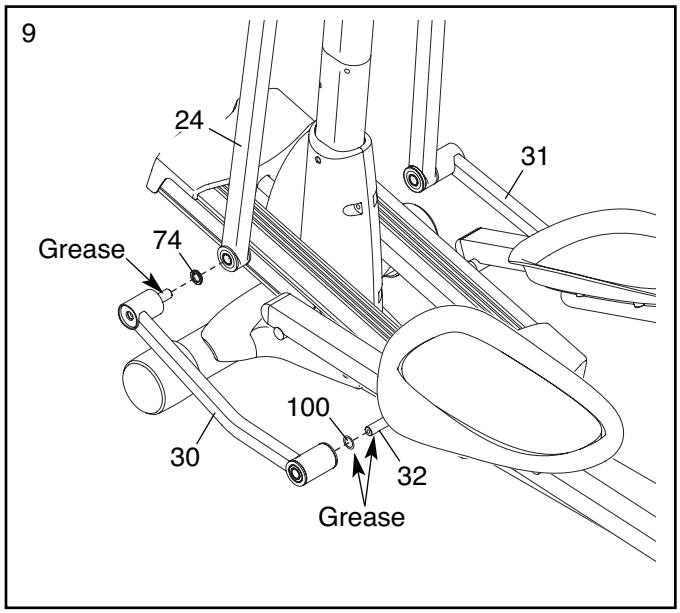

10. Attach the Left Link Arm (30) to the Left Pedal Arm (32) with an M8 x 15mm Button Screw (106), an M8.5 x 16mm x 1.5mm Washer (103), and an Axle Cover (66).

    Attach the Left Link Arm (30) to the left Upper Body Leg (24) with an M8 x 25mm Button Screw (110), two M8.5 x 16mm x 1.5mm Washers (103), two Axle Covers (66), a Link Arm Spacer (74), and an M8 x 15mm Button Screw (106) as shown.

    Attach the Right Link Arm (31) in the same way.

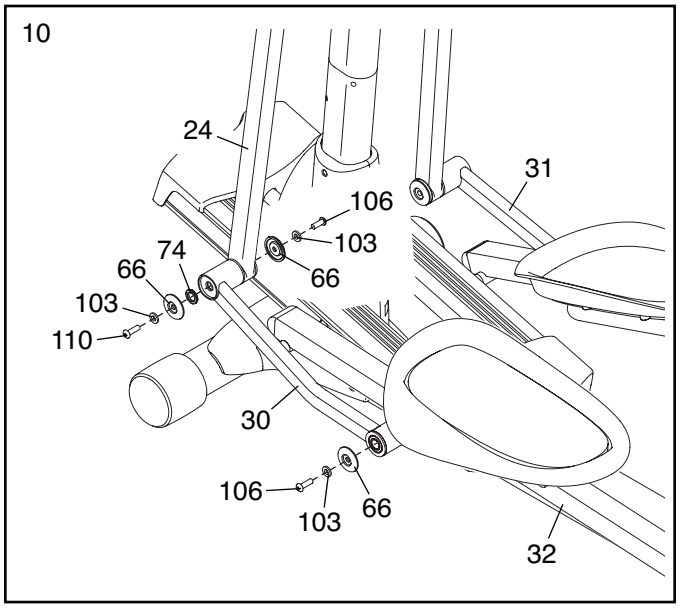

11. **Plug the power cord (not shown) into the power socket (not shown) at the rear of the elliptical exerciser.**

    Make sure that all parts of the elliptical exerciser are properly tightened. Note: Some hardware may be left over after assembly is completed. To protect the floor or carpet from damage, place a mat under the elliptical exerciser.

HOW TO PLUG IN THE POWER CORD

This product must be grounded. If it should malfunction or break down, grounding provides a path of least resistance for electric current to reduce the risk of electric shock. This product is equipped with a cord having an equipment-grounding conductor and a grounding plug. **Plug the power cord into an appropriate outlet that is properly installed and grounded in accordance with all local codes and ordinances. This product is for use on a nominal 120-volt circuit. Important: The elliptical exerciser is not compatible with GFCI-equipped outlets.**

⚠ DANGER: Improper connection of the equipment-grounding conductor can result in an increased risk of electric shock. Check with a qualified electrician or serviceman if you are in doubt as to whether the product is properly grounded. Do not modify the plug provided with the product—if it will not fit the outlet, have a proper outlet installed by a qualified electrician.

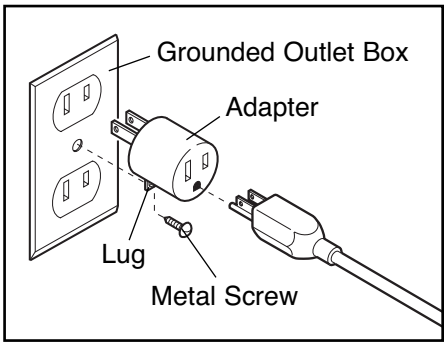

A temporary adapter may be used to connect the power cord to a 2-pole receptacle as shown at the right if a properly grounded outlet is not available. The temporary adapter should be used only until a properly grounded outlet can be installed by a qualified electrician.

The green-colored rigid ear, lug, or the like extending from the adapter must be connected to a permanent ground such as a properly grounded outlet box cover. Whenever the adapter is used, it must be held in place by a metal screw. **Some 2-pole receptacle outlet box covers are not grounded. Contact a qualified electrician to determine if the outlet box cover is grounded before using an adapter.**

HOW TO FOLD AND UNFOLD THE ELLIPTICAL EXERCISER

When the elliptical exerciser is not in use, the frame can be folded out of the way. First, lift the latch under each pedal arm, and lift the pedal arms off the sleeves on the crank arms.

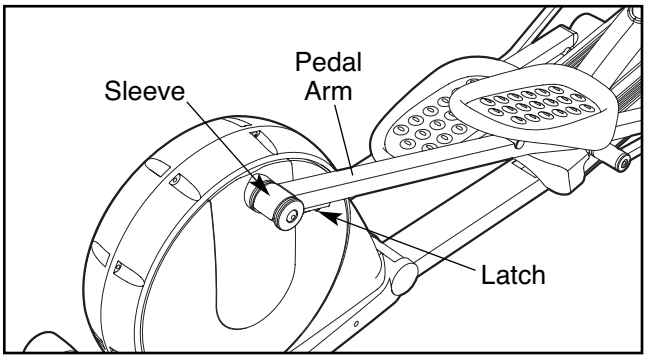

Next, raise the pedal arms until they touch the magnets on the upper body legs; the magnets will hold the pedal arms in place. Then, hold the handle and lift the frame until it locks in a vertical position.

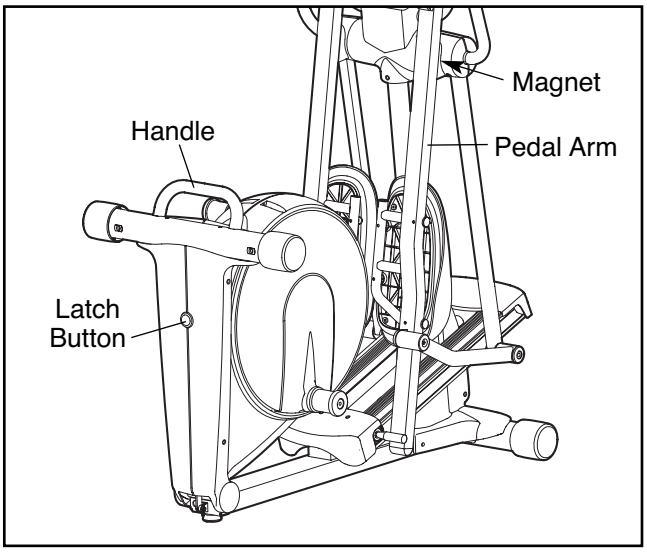

To use the elliptical exerciser, first hold the handle, press the latch button, and lower the frame.

Next, pull the pedal arms off the magnets on the upper body legs. Then, **lift the latches under the pedal arms,** and set the pedal arms on the sleeves on the crank arms. Release the latches, and make sure that the pedal arms are securely connected to the crank arms.

HOW TO MOVE THE ELLIPTICAL EXERCISER

To move the elliptical exerciser, first fold it as described on page 11. Next, stand in front of the elliptical exerciser, hold the handgrip pulse sensors, and place one foot against the center of the front stabilizer. Pull the pulse sensors until the elliptical exerciser will roll on the front wheels. Carefully move the elliptical exerciser to the desired position, and then lower it.

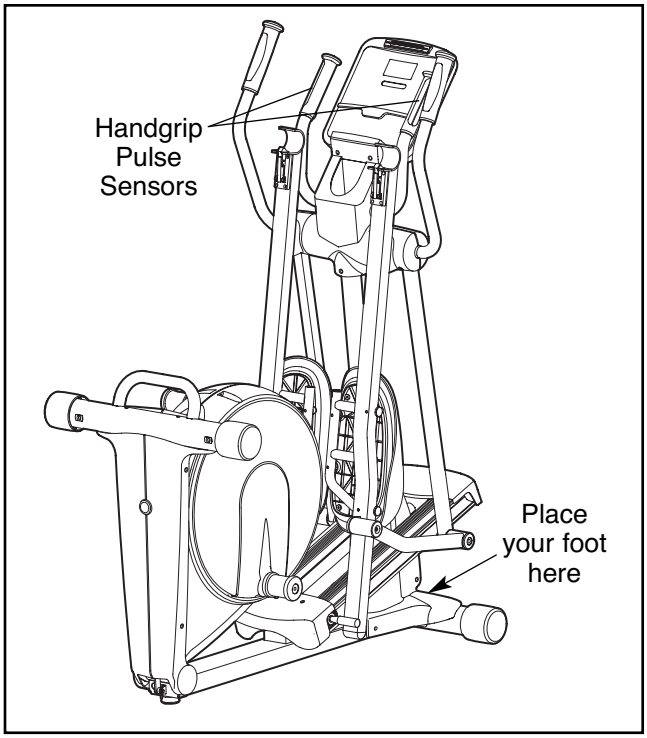

HOW TO EXERCISE ON THE ELLIPTICAL EXERCISER

To mount the elliptical exerciser, hold the upper body arms and step onto the pedal that is in the lowest position. Next, step onto the other pedal. Push the pedals until they begin to move with a continuous motion.

Note: The crank arms can turn in either direction. It is recommended that you turn the crank arms in the direction shown by the arrow below; however, for variety you can turn the crank arms in the opposite direction.

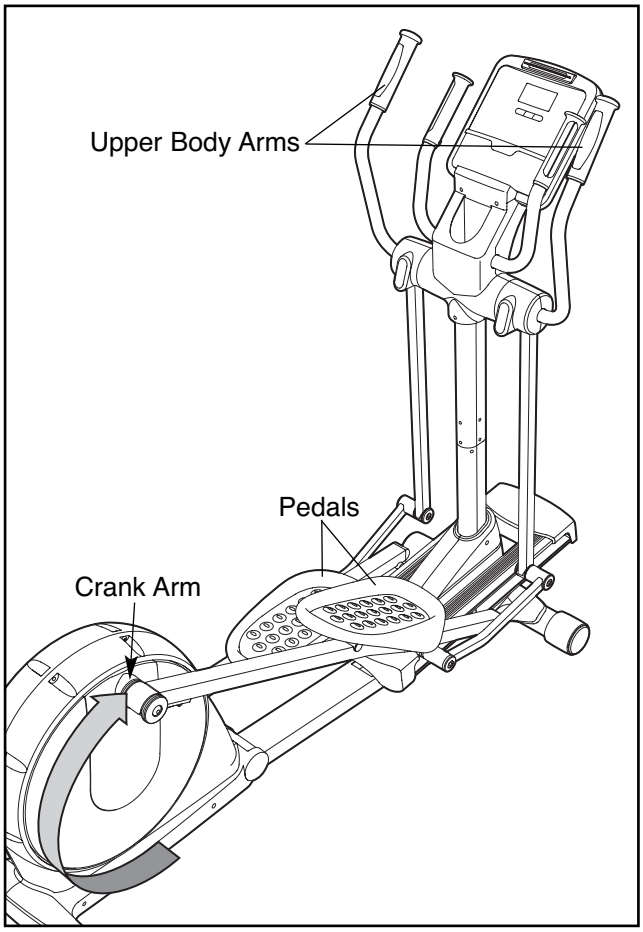

To dismount the elliptical exerciser, wait until the pedals come to a complete stop. **Note: The elliptical exerciser does not have a free wheel; the pedals will continue to move until the flywheel stops.** When the pedals are stationary, step off the higher pedal first. Then, step off the lower pedal.

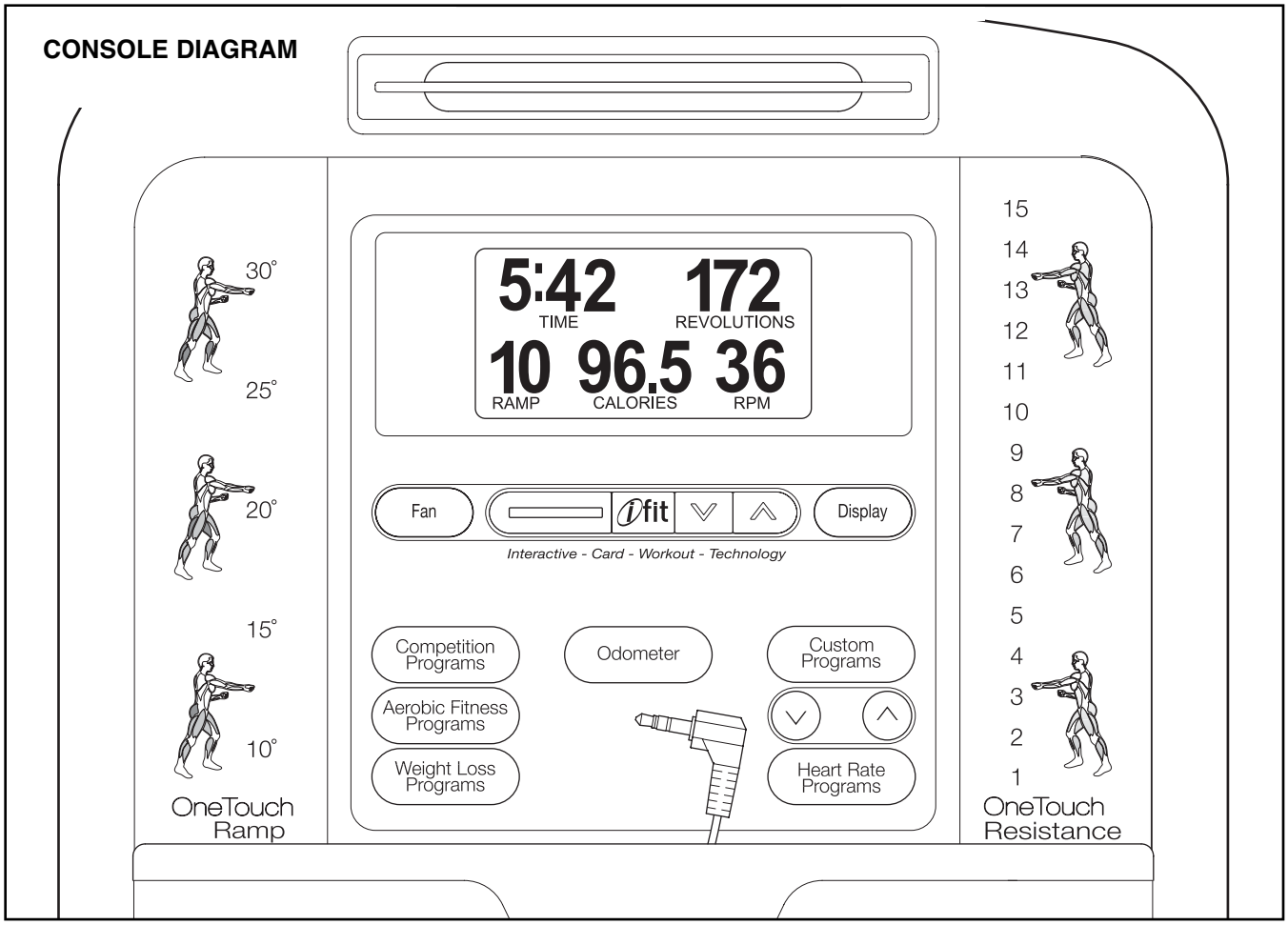

FEATURES OF THE CONSOLE

The advanced console offers an array of features designed to make your workouts more effective and enjoyable. When you select the manual mode of the console, you can change the resistance of the pedals and the incline of the ramp with the touch of a button. As you exercise, the console will provide continuous exercise feedback. You can even measure your heart rate using the handgrip pulse sensor.

The console features twenty preset programs. Each program automatically changes the resistance of the pedals and prompts you to increase or decrease your pedaling pace as it guides you through an effective workout.

The console also offers two custom programs that allow you to create your own workout programs and store them in memory for future use.

In addition, the console features two heart rate programs that change the resistance of the pedals to keep your heart rate near target heart rate settings while you exercise.

The console also features the new iFIT Interactive Workout System. The iFIT Interactive Workout System enables the console to accept iFIT Cards containing workout programs designed to help you achieve specific fitness goals. For example, lose unwanted pounds with the 8-week Weight Loss program. iFIT programs control the resistance of the pedals while the voice of a personal trainer coaches you and motivates you through your workouts. One iFIT Card with three new programs is included. Additional iFIT Cards are available separately. **To purchase iFIT Cards, go to www.iFIT.com or call the toll-free telephone number on the front cover of this manual. iFIT Cards are also available at select stores.**

You can even connect your MP3 player or CD player to the console's stereo sound system and listen to your favorite music or audio books while you exercise.

To use the manual mode of the console, follow the steps beginning on page 14. **To use a preset program**, see page 16. **To create a custom program**, see page 17. **To use a custom program**, see page 18. **To use a heart rate program**, see page 19. **To use an iFIT program**, see page 21. **To use the stereo sound system**, see page 21.

HOW TO USE THE MANUAL MODE

Note: If there is a sheet of clear plastic on the face of the console, remove the plastic.

1 Press any button on the console or begin pedaling to turn on the console.

When you turn on the console, the display will light. A tone will then sound and the console will be ready for use.

2 Select the manual mode.

When you turn on the console, the manual mode will be selected. If you have selected a program, reselect the manual mode by pressing any of the Programs buttons repeatedly until zeros appear in the display.

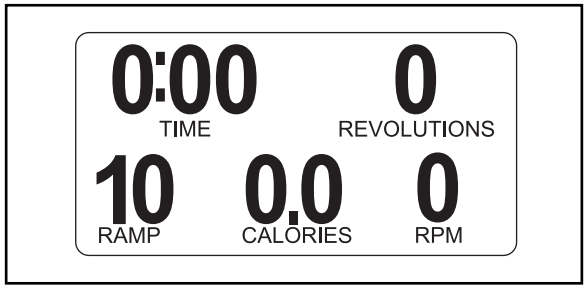

3 Begin pedaling and change the resistance of the pedals and the incline of the ramp as desired.

As you pedal, change the resistance of the pedals by pressing the OneTouch Resistance buttons. There are fifteen resistance levels. Note: After you press the buttons, it will take a moment for the pedals to reach the selected resistance level.

To vary the motion of the pedals, you can change the incline of the ramp. To change the incline, press the OneTouch Ramp buttons. There are five incline levels. Note: After you press the buttons, it will take a moment for the ramp to reach the selected incline level.

4 Follow your progress with the display.

While you pedal, the upper left corner of the display will show the elapsed time. Note: During a program, except for heart rate program 1, the display will show the time remaining in the program.

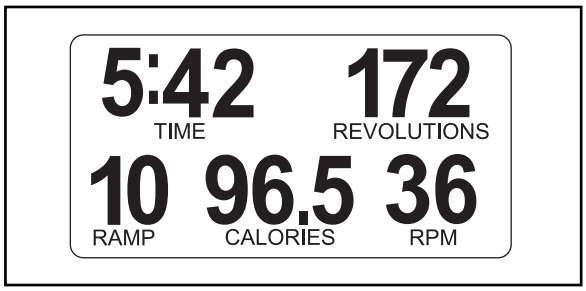

The upper right corner of the display will show the distance you have pedaled, in total revolutions. The display will also show your heart rate when you use the handgrip pulse sensor (see step 5 on page 15).

The lower left corner of the display will show the ramp incline level.

The lower center of the display will show the approximate number of calories you have burned.

The lower right corner of the display will show your pedaling pace, in revolutions per minute.

The center of the display will show the resistance level of the pedals for a few seconds each time the resistance level changes.

You can also view selected information at a larger size. Press the Display button repeatedly to view the elapsed time and the distance you have pedaled, the elapsed time and the approximate number of calories you have burned, or the elapsed time. Press the Display button again to view a workout history of resistance levels and pedaling pace.

To again view the time, distance, ramp incline, number of calories burned, and pedaling pace, press the Display button again.

To view the total distance pedaled since the elliptical exerciser was purchased and the trip distance, press the Odometer button. The information will appear in the display for a few seconds. To reset the trip distance, hold down the Odometer button for a few seconds.

5 **Measure your heart rate if desired.**

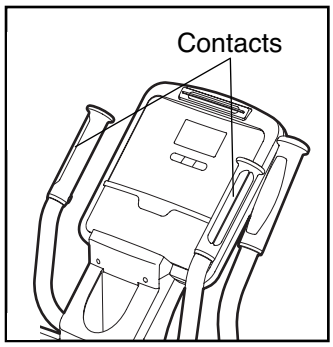

If there are sheets of clear plastic on the metal contacts on the handgrip pulse sensor, remove the plastic. In addition, make sure that your hands are clean. To measure your heart rate, hold the handgrip pulse sensor with your palms resting against the metal contacts. **Avoid moving your hands or gripping the contacts tightly.**

When your pulse is detected, your heart rate will be shown in the display. For the most accurate heart rate reading, hold the contacts for at least 15 seconds.

If your heart rate is not shown, make sure that your hands are positioned as described. Be careful not to move your hands excessively or to squeeze the metal contacts tightly. For optimal performance, clean the metal contacts using a soft cloth; **never use alcohol, abrasives, or chemicals to clean the contacts.**

6 **Turn on the fan if desired.**

To turn on the fan at high speed, press the Fan button. To turn on the fan at low speed, press the Fan button a second time. To turn off the fan, press the Fan button again. Note: If the pedals have not moved for about thirty seconds, the fan will automatically turn off.

Pivot the fan louvers above the display upward or downward to direct the airflow from the fan.

7 **When you are finished exercising, the console will turn off automatically.**

If the pedals have not moved for several seconds, a series of tones will sound and the console will pause.

If the pedals have not moved for about five minutes, the console will turn off and the display will be reset.

HOW TO USE A PRESET PROGRAM

1 **Turn on the console.**

See step 1 on page 14.

2 **Select a preset program.**

To select a weight loss program, press the Weight Loss Programs button repeatedly; to select an aerobic fitness program, press the Aerobic Fitness Programs button; to select a competition program, press the Competition Programs button.

When you select a preset program, the name of the program, the program time, and the maximum pace and resistance level for the program will appear in the display for a few seconds. A profile of the resistance levels of the program will then appear in the display.

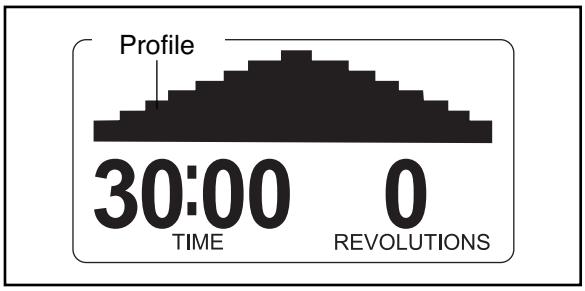

3 **Begin pedaling to start the program.**

Each program is divided into 20, 30, or 45 one-minute segments. One resistance level and one target pace setting are programmed for each segment. Note: The same resistance level and/or target pace setting may be programmed for two or more consecutive segments.

During the program, the program profile will show your progress (see the drawing above). The flashing segment of the profile represents the current segment of the program. The height of the flashing segment indicates the resistance level for the current segment. At the end of each segment of the program, a series of tones will sound and the next segment of the profile will begin to flash. If a different resistance level is programmed for the next segment, the resistance level will appear in the display for a few seconds to alert you. The resistance of the pedals will then change.

As you exercise, you will be prompted to keep your pedaling pace near the target pace setting for the current segment. When an upward-pointing arrow or the prompt SPEED UP appears next to the pace information in the display (see step 4 on page 17), increase your pace. When a downward-pointing arrow or the prompt SLOW DOWN appears, decrease your pace. When no arrow or prompt appears, maintain your current pace. **Important: The target pace settings are intended only to provide motivation. Make sure to pedal at a pace that is comfortable for you.**

If the resistance level for the current segment is too high or too low, you can manually override the setting by pressing the OneTouch Resistance buttons. However, when the current segment ends, the pedals will automatically adjust to the resistance level for the next segment.

If you stop pedaling for several seconds, a series of tones will sound and the program will pause. To restart the program, simply resume pedaling. The program will continue until the last segment of the profile flashes and the last segment of the program ends.

4 **Follow your progress with the display.**

During the program, the display will show the program profile, the time remaining in the program, and the distance you have pedaled.

To view the profile, your pedaling pace, and the distance you have pedaled, press the Display button. Note: The words SPEED UP or SLOW DOWN may appear in the display to prompt you to keep your pedaling pace near the target pace setting for the current segment.

To view the time remaining in the program and the distance pedaled, press the Display button. Press the Display button again to view the time remaining and the approximate number of calories burned.

To view the time remaining, distance pedaled, ramp incline, number of calories burned, and pedaling pace, press the Display button again. Note: An upward- or downward-pointing arrow may appear in the display to prompt you to keep your pedaling pace near the target pace setting for the current segment.

To view the first display again, press the Display button again.

5 **Measure your heart rate if desired.**

See step 5 on page 15.

6 **Turn on the fan if desired.**

See step 6 on page 15.

7 **When you are finished exercising, the console will turn off automatically.**

See step 7 on page 15.

HOW TO CREATE A CUSTOM PROGRAM

1 **Turn on the console.**

See step 1 on page 14.

2 **Select a custom program.**

To select a custom program, press the Custom Programs button once or twice. When you select a custom program, the name of the program and the settings for the program will appear in the display for a few seconds.

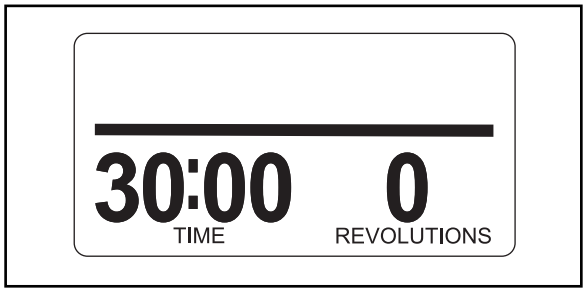

3 **Begin pedaling to start the program, and program the desired settings.**

Each custom program is divided into 30 one-minute segments. You can program one resistance level and one target pace setting for each segment.

To program a resistance level for the first segment, simply adjust the resistance of the pedals by pressing the OneTouch Resistance buttons. To program a target pace for the first segment, simply pedal at the desired pace.

At the end of the first segment, the program will store the current resistance level and your current pace in memory. Program a resistance level and a target pace for the second segment as described above.

Continue exercising for up to forty minutes. Stop pedaling when you are finished with your workout. The program you created will then be stored in memory. Note: If your workout is less than thirty minutes long, any remaining segments in the program will be stored with the last resistance level and target pace setting you programmed.

4 **When the program is finished, the console will turn off automatically.**

See step 7 on page 15.

HOW TO USE A CUSTOM PROGRAM

1 **Turn on the console.**

See step 1 on page 14.

2 **Select a custom program.**

To select a custom program, press the Custom Programs button repeatedly until the words CUSTOM 1 or CUSTOM 2 appear in the display.

When you select a custom program, the name of the program, the program time, and the maximum pace and resistance level will appear in the display for a few seconds. A profile of the resistance levels of the program will then appear in the display.

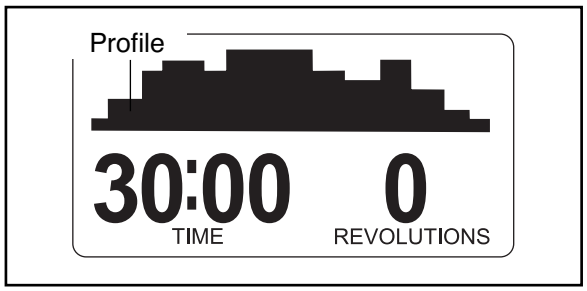

3 **Begin pedaling to start the program.**

Each custom program is divided into 30 one-minute segments. One resistance level and one target pace setting are programmed for each segment. Note: The same resistance level and/or target pace setting may be programmed for two or more consecutive segments.

During the program, the program profile will show your progress. The flashing segment of the profile represents the current segment of the program. The height of the flashing segment indicates the resistance level for the current segment. At the end of each segment of the program, a series of tones will sound and the next segment of the profile will begin to flash. If a different resistance level is programmed for the next segment, the resistance level will appear in the display for a few seconds to alert you. The resistance of the pedals will then change.

As you exercise, you will be prompted to keep your pedaling pace near the target pace setting for the current segment.
When an upward-pointing arrow or the prompt SPEED UP appears next to the pace information in the display (see step 4 on page 17), increase your pace. When a downward-pointing arrow or the prompt SLOW DOWN appears, decrease your pace. When no arrow or prompt appears, maintain your current pace. **Important: The target pace settings are intended only to provide motivation. Make sure to pedal at a pace that is comfortable for you.**

If the resistance level for the current segment is too high or too low, you can manually override the setting by pressing the OneTouch Resistance buttons. However, when the current segment ends, the pedals will automatically adjust to the resistance level for the next segment.

If you stop pedaling for several seconds, a series of tones will sound and the program will pause. To restart the program, simply resume pedaling. The program will continue until the last segment of the profile flashes and the last segment of the program ends.

4 **Change the program if desired.**

If desired, you can change the program while using it. **To change the resistance level for the current segment,** simply press the OneTouch Resistance buttons. At the end of the current segment, the new resistance level will be stored in memory. **To change the target pace for the current segment,** simply change your pedaling pace. At the end of the current segment, your pace will be stored in memory. You can continue exercising and changing the program for up to thirty minutes.

5 **Follow your progress with the display.**

See step 4 on page 17.

6 **Measure your heart rate if desired.**

See step 5 on page 15.

7 **Turn on the fan if desired.**

See step 6 on page 15.

8 **When you are finished exercising, the console will turn off automatically.**

See step 7 on page 15.

HOW TO USE A HEART RATE PROGRAM

1 **Turn on the console.**

See step 1 on page 14.

2 **Select a heart rate program.**

To select one of the heart rate programs, press the Heart Rate Programs button repeatedly until the words HEART RATE 1 or HEART RATE 2 appear in the display.

3 **Enter a target heart rate setting.**

A few seconds after you select a heart rate program, the words ENTER MAX TARGET HEART RATE FOR THIS WORKOUT will appear in the display and the number 110 will begin to flash.

During heart rate program 1, the same target heart rate setting will be programmed for all segments of the program. If you have selected heart rate program 1, press the increase and decrease buttons above the Heart Rate Programs button to enter the desired target heart rate setting (see EXERCISE INTENSITY on page 23).

During heart rate program 2, different target heart rate settings will be programmed for different segments of the program. If you have selected heart rate program 2, press the increase and decrease buttons above the Heart Rate Programs button to enter the desired maximum target heart rate setting for the program (see EXERCISE INTENSITY on page 23).

4 **Hold the handgrip pulse sensor.**

It is not necessary to hold the handgrip pulse sensor continuously during heart rate programs; however, you should hold the handgrip pulse sensor frequently for the programs to operate properly. **Each time you hold the handgrip pulse sensor, keep your hands on the metal contacts for at least 30 seconds.**

5 **Begin pedaling to start the program.**

Heart rate program 1 is divided into 40 one-minute segments. Note: For a shorter workout, stop exercising or select a different program before the program ends.

Heart rate program 2 is divided into 30 one-minute segments. One target heart rate setting is programmed for each segment. Note: The same target heart rate setting may be programmed for consecutive segments.

During the program, the program profile in the display will show your progress. The flashing segment of the profile represents the current segment of the program. The height of the flashing segment indicates the target heart rate setting for the current segment. At the end of each segment of the program, a series of tones will sound and the next segment of the profile will begin to flash.

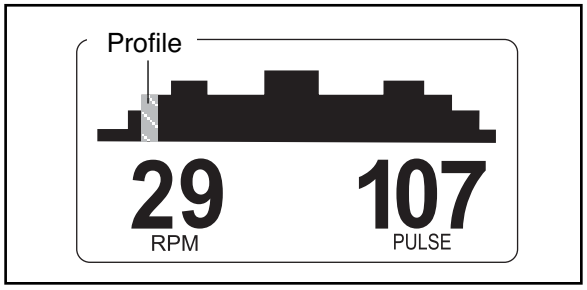

During both programs, the console will regularly compare your heart rate to the target heart rate setting for the current segment of the program. If your heart rate is too far below or above the target heart rate setting, the resistance of the pedals will automatically increase or decrease to bring your heart rate closer to the target heart rate setting. Each time the resistance changes, the resistance level will appear in the display for a few seconds to alert you.

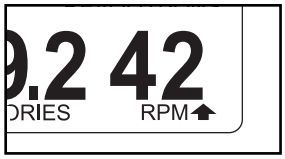

While you exercise, you will be prompted to maintain a constant pedaling pace. When an upward-pointing arrow or the prompt SPEED UP appears next to the pace information in the display (see step 6 on this page), increase your pace. When a downward-pointing arrow or the prompt SLOW DOWN appears, decrease your pace. When no arrow or prompt appears, maintain your current pace.

If the resistance level for the current segment is too high or too low, you can manually override the setting by pressing the OneTouch Resistance buttons. However, when the console compares your heart rate to the target heart rate setting, the resistance of the pedals may automatically increase or decrease to bring your heart rate closer to the target heart rate setting.

If you stop pedaling for several seconds, a series of tones will sound and the program will pause. To restart the program, simply resume pedaling. The program will continue until the last segment of the program ends.

6 **Follow your progress with the display.**

During heart rate program 1, the display will show a graphic that represents a heartbeat each time your heartbeat is detected, the elapsed time, and the distance that you have pedaled. **During heart rate program 2,** the display will show the program profile, the time remaining in the program, and the distance that you have pedaled.

To view the profile, your pedaling pace, and the distance you have pedaled, press the Display button. Note: The words SPEED UP or SLOW DOWN may appear in the display to prompt you to keep your pedaling pace near the target pace setting for the current segment.

To view the time remaining in the program and the distance pedaled, press the Display button. Press the Display button again to view the time remaining and the approximate number of calories burned.

To view the time remaining, distance pedaled, ramp incline, number of calories burned, and pedaling pace, press the Display button again. Note: An upward- or downward-pointing arrow may appear in the display to prompt you to keep your pedaling pace near the target pace setting for the current segment.

To view the first display again, press the Display button again.

7 **Turn on the fan if desired.**

See step 6 on page 15.

8 **When you are finished exercising, the console will turn off automatically.**

See step 7 on page 15.

HOW TO USE AN IFIT PROGRAM

1 **Turn on the console.**

See step 1 on page 14.

2 **Insert an iFIT Card and select a program.**

To use an iFIT program, insert an iFIT Card into the iFIT slot; make sure that the iFIT Card is oriented so the metal contacts are face-down and facing the slot. When the iFIT Card is properly inserted, the indicator next to the slot will light and the words IFIT 1 will appear in the display.

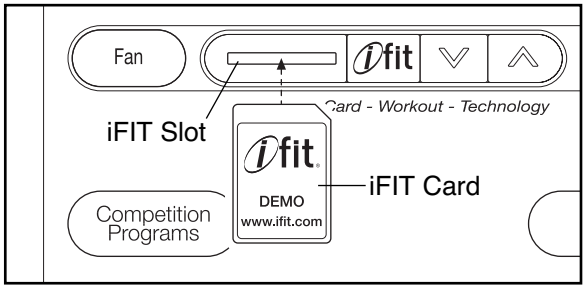

Next, select the desired program on the iFIT Card by pressing the increase and decrease buttons next to the iFIT slot.

A moment after you select a program, the voice of a personal trainer will begin guiding you through your workout. iFIT programs work in the same way as preset programs. To use the program, see steps 3 to 6 on pages 16 and 17.

HOW TO USE THE STEREO SOUND SYSTEM

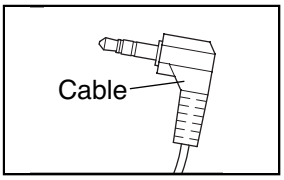

To play music or audio books through the console's stereo sound system while you exercise, first locate the stereo audio cable in the center of the console above the speakers. Plug the cable into a jack on your MP3 player or CD player; **make sure that the audio cable is fully plugged in.**

Next, press the play button on your MP3 player or CD player. Adjust the volume of the speakers using the volume control on your MP3 player or CD player.

When not in use, insert the stereo audio cable into the storage recess on the console.

MAINTENANCE AND TROUBLESHOOTING

Inspect and tighten all parts of the elliptical exerciser regularly. Replace any worn parts immediately.

To clean the elliptical exerciser, use a damp cloth and a small amount of mild soap. **Important: To avoid damage to the console, keep liquids away from the console and keep the console out of direct sunlight.**

HOW TO LEVEL THE ELLIPTICAL EXERCISER

If the elliptical exerciser rocks on your floor during use, turn one or both of the leveling feet beneath the rear stabilizer until the rocking motion is eliminated.

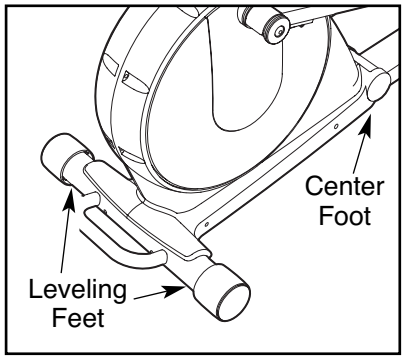

HANDGRIP PULSE SENSOR TROUBLESHOOTING

- Avoid moving your hands while using the handgrip pulse sensor. Excessive movement may interfere with heart rate readings.
- Do not hold the metal contacts too tightly; doing so may interfere with heart rate readings.
- For the most accurate heart rate reading, hold the metal contacts for about 30 seconds.
- For optimal performance of the handgrip pulse sensor, keep the metal contacts clean. The contacts can be cleaned with a soft cloth—**never use alcohol, abrasives, or chemicals to clean the contacts.**

HOW TO ELIMINATE FLEXING IN THE CENTER OF THE ELLIPTICAL EXERCISER

If the elliptical exerciser flexes in the center during use, turn the center foot beneath the frame (see the drawing at the left) until the flexing is eliminated.

HOW TO ADJUST THE BELT

If the pedals slip while you are pedaling, even while the resistance is adjusted to the highest setting, the belt may need to be adjusted. To adjust the belt, first carefully pry off the left Disc Cover (13) using a flat screwdriver. Next, remove the four screws (not shown) from the center of the left Disc (12). Gently rotate the Disc Cover and the Disc away from the elliptical exerciser.

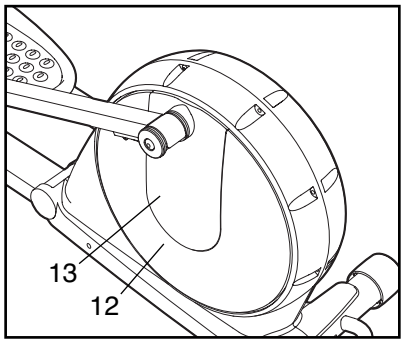

Loosen, but do not remove, the three 1/4" x 19mm Button Screws (114). Insert the shaft of a screwdriver downward between the Idler (47) and the Idler Pulley (48). Pull the top of the screwdriver toward the rear of the elliptical exerciser until the Belt (96) is tight, and then tighten the three Button Screws.

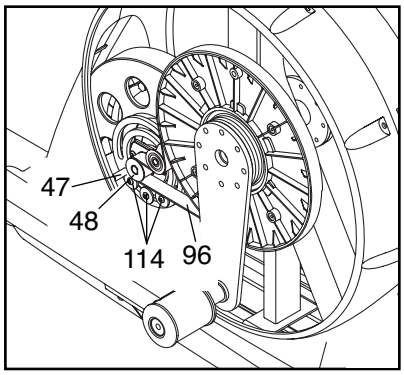

Reattach the left disc with the four screws and then reattach the left disc cover.

CONDITIONING GUIDELINES

⚠ WARNING:

Before beginning this or any exercise program, consult your physician. This is especially important for persons over the age of 35 or persons with pre-existing health problems.

The pulse sensor is not a medical device. Various factors may affect the accuracy of heart rate readings. The pulse sensor is intended only as an exercise aid in determining heart rate trends in general.

The following guidelines will help you to plan your exercise program. Remember that proper nutrition and adequate rest are essential for successful results.

EXERCISE INTENSITY

Whether your goal is to burn fat or to strengthen your cardiovascular system, the key to achieving the desired results is to exercise with the proper intensity. The proper intensity level can be found by using your heart rate as a guide. The chart below shows recommended heart rates for fat burning, maximum fat burning, and cardiovascular (aerobic) exercise.

165	*155*	*145*	*140*	*130*	*125*	*115*	💗
145	*138*	*130*	*125*	*118*	*110*	*103*	💗
125	*120*	*115*	*110*	*105*	*95*	*90*	♥
20	*30*	*40*	*50*	*60*	*70*	*80*	

To find the proper heart rate for you, first find your age at the bottom of the chart (ages are rounded off to the nearest ten years). Next, find the three numbers above your age. The three numbers are your "training zone." The lower two numbers are recommended heart rates for fat burning; the highest number is the recommended heart rate for aerobic exercise.

Fat Burning

To burn fat effectively, you must exercise at a relatively low intensity level for a sustained period of time.

During the first few minutes of exercise, your body uses easily accessible *carbohydrate* calories for energy. Only after the first few minutes of exercise does your body begin to use stored *fat* calories for energy. If your goal is to burn fat, adjust the intensity of your exercise until your heart rate is near the lowest number in your training zone as you exercise.

For maximum fat burning, adjust the intensity of your exercise until your heart rate is near the middle number in your training zone as you exercise.

Aerobic Exercise

If your goal is to strengthen your cardiovascular system, your exercise must be "aerobic." Aerobic exercise is activity that requires large amounts of oxygen for prolonged periods of time. This increases the demand on the heart to pump blood to the muscles, and on the lungs to oxygenate the blood. For aerobic exercise, adjust the intensity of your exercise until your heart rate is near the highest number in your training zone as you exercise.

WORKOUT GUIDELINES

Each workout should include the following three parts:

A warm-up, consisting of 5 to 10 minutes of stretching and light exercise. A proper warm-up increases your body temperature, heart rate, and circulation in preparation for exercise.

Training zone exercise, consisting of 20 to 30 minutes of exercising with your heart rate in your training zone. Note: During the first few weeks of your exercise program, do not keep your heart rate in your training zone for longer than 20 minutes.

A cool-down, with 5 to 10 minutes of stretching. This will increase the flexibility of your muscles and will help to prevent post-exercise problems.

EXERCISE FREQUENCY

To maintain or improve your condition, complete three workouts each week, with at least one day of rest between workouts. After a few months of regular exercise, you may complete up to five workouts each week if desired. The key to success is to make exercise a regular and enjoyable part of your everyday life.

PART LIST—MODEL NO. RBEL9906.1

R1206A

Key No.	Qty.	Description
1	1	Frame
2	1	Folding Frame
3	1	Rear Stabilizer
4	1	Front Stabilizer
5	1	Ramp
6	1	Front Ramp Cover
7	1	Rear Ramp Cover
8	2	Side Ramp Cover
9	1	Lift Motor
10	1	Upright
11	1	Console
12	2	Disc
13	2	Disc Cover
14	1	Left Side Shield
15	1	Right Side Shield
16	2	Rear Endcap
17	2	Wheel
18	2	Wheel Cover
19	1	Rear Upright Cover
20	1	Front Upright Cover
21	2	Handgrip
22	1	Left Upper Body Arm
23	1	Right Upper Body Arm
24	2	Upper Body Leg
25	2	Pulse Sensor/Wire
26	1	Left Rear Upper Body Cover
27	1	Left Front Upper Body Cover
28	1	Right Rear Upper Body Cover
29	1	Right Front Upper Body Cover
30	1	Left Link Arm
31	1	Right Link Arm
32	1	Left Pedal Arm
33	1	Right Pedal Arm
34	1	Left Pedal
35	1	Right Pedal
36	1	Left Frame Cover
37	1	Right Frame Cover
38	4	Roller
39	2	Pedal Arm Endcap
40	1	Tray
41	2	Pedal Arm Latch
42	4	Pedal Arm Latch Spring
43	6	Pedal Arm Cap
44	1	Eddy Mechanism
45	1	Eddy Crank Assembly
46	1	Pillow Block
47	1	Idler
48	1	Idler Pulley
49	1	Eddy Motor
50	1	Reed Switch/Wire
51	1	Clamp
52	2	Large Axle Cover
53	2	Crank Bushing
54	2	Crank Bushing Sleeve
55	2	Crank Arm
56	1	Crank Arm Spacer
57	1	Large Pulley
58	1	Crank Flange
59	2	Crank Bearing Assembly
60	1	Crank Spacer
61	1	Crank
62	2	Lift Bracket
63	1	Lift Axle
64	1	Lower Wire Harness
65	1	Upper Wire Harness
66	6	Axle Cover
67	8	Bushing Assembly
68	4	Brass Bushing
69	1	Latch Bracket
70	1	Latch Button
71	1	Upper Body Axle
72	1	Ramp Axle
73	1	Pivot Axle
74	4	Link Arm Spacer
75	1	Latch Axle
76	1	Latch Spring
77	2	Lift Axle Screw
78	1	Button Frame
79	2	Hairpin Cotter
80	2	Lift Axle Washer
81	1	Control Board
82	4	M10 x 93mm Button Screw
83	2	Crank Snap Ring
84	2	Crank Arm Washer
85	2	Outside Crank Bushing
86	1	Flange Screw
87	4	M10 x 25mm Washer
88	5	Bolt Set
89	4	Small Snap Ring
90	1	Idler Snap Ring
91	1	Eddy Snap Ring
92	1	Idler Spacer
93	2	M10 Nylon Locknut
94	3	Idler Washer
95	1	Center Foot
96	1	Belt
97	1	Control Box
98	2	Leveling Foot
99	4	M10 Curved Washer
100	4	Wave Washer

Key No.	Qty.	Description	Key No.	Qty.	Description
101	4	M8 Split Washer	119	4	Bearing Assembly
102	12	M6 Split Washer	120	2	Upright Brass Bushing
103	8	M8.5 x 16mm x 1.5mm Washer	121	1	Left Lift Arm
104	4	M8 x 20mm x 2mm Washer	122	1	Right Lift Arm
105	4	M8 x 16mm Button Screw	123	2	Lift Bushing
106	10	M8 x 15mm Button Screw	124	1	Transformer
107	8	M8 x 20mm Button Screw	125	1	Control Box Cover
108	4	M6 x 62mm Screw	126	1	Motor Clevis Pin
109	4	M6 x 35mm Screw	127	1	Bracket Pin
110	6	M8 x 25mm Button Screw	128	1	Lift Reed Switch
111	4	M10 x 20mm Button Screw	129	1	Switch Cover
112	8	M8 x 25mm Shoulder Screw	130	1	Power Socket
113	2	M8 x 30mm Button Screw	131	2	Motor Spacer
114	5	1/4" x 19mm Button Screw	132	4	M4 x 10mm Screw
115	3	M4 x 12mm Screw	#	-	User’s Manual
116	56	M4 x 16mm Screw	#	-	Hex Key
117	8	M4 x 16mm Cupped Screw	#	-	Grease
118	4	M6 Nylon Locknut	#	-	Power Cord

Note: “#” indicates a non-illustrated part. Specifications are subject to change without notice. See the back cover of this manual for information about ordering replacement parts.

EXPLODED DRAWING A—MODEL NO. RBEL9906.1 R1206A

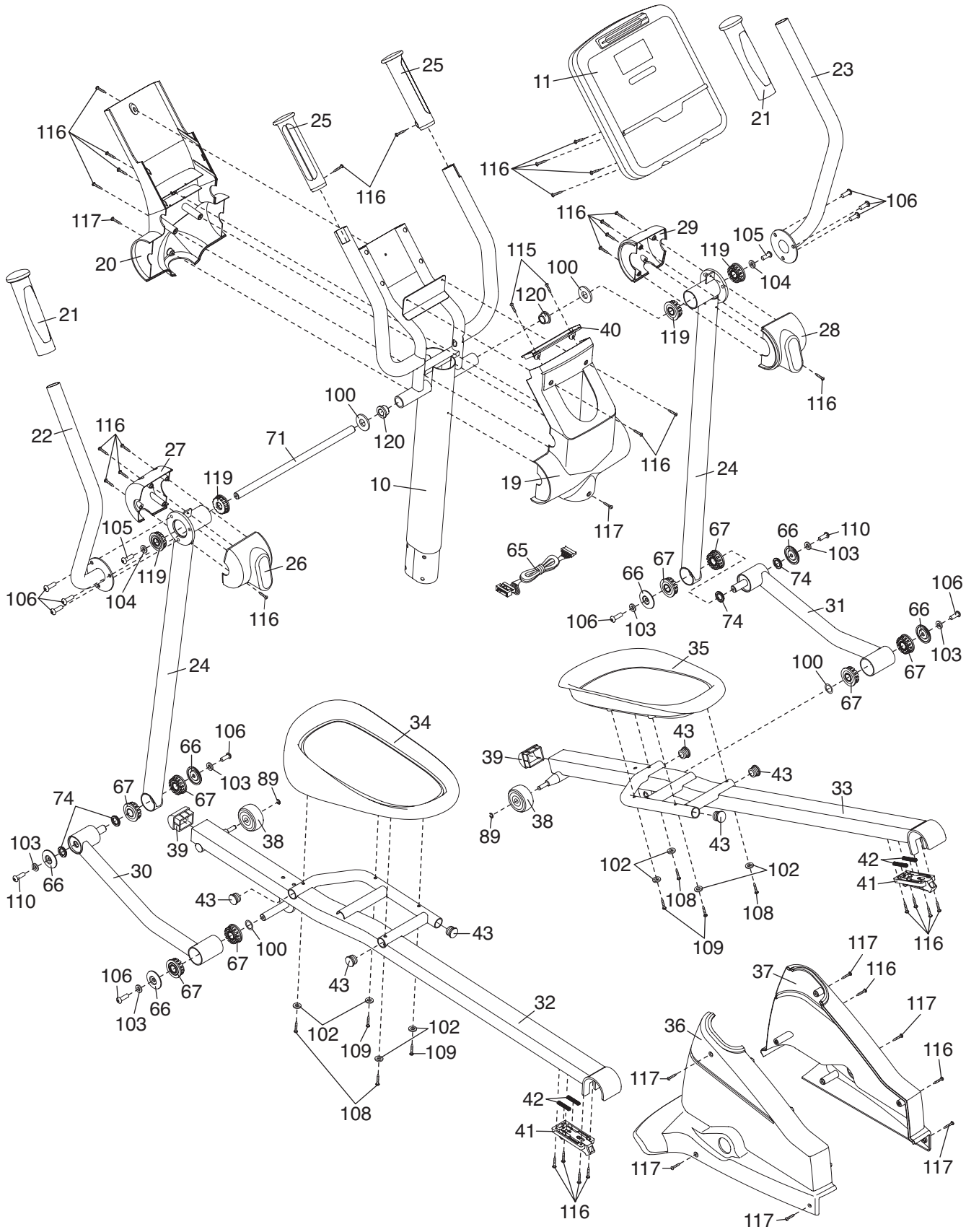

EXPLODED DRAWING B—MODEL NO. RBEL9906.1

R1206A

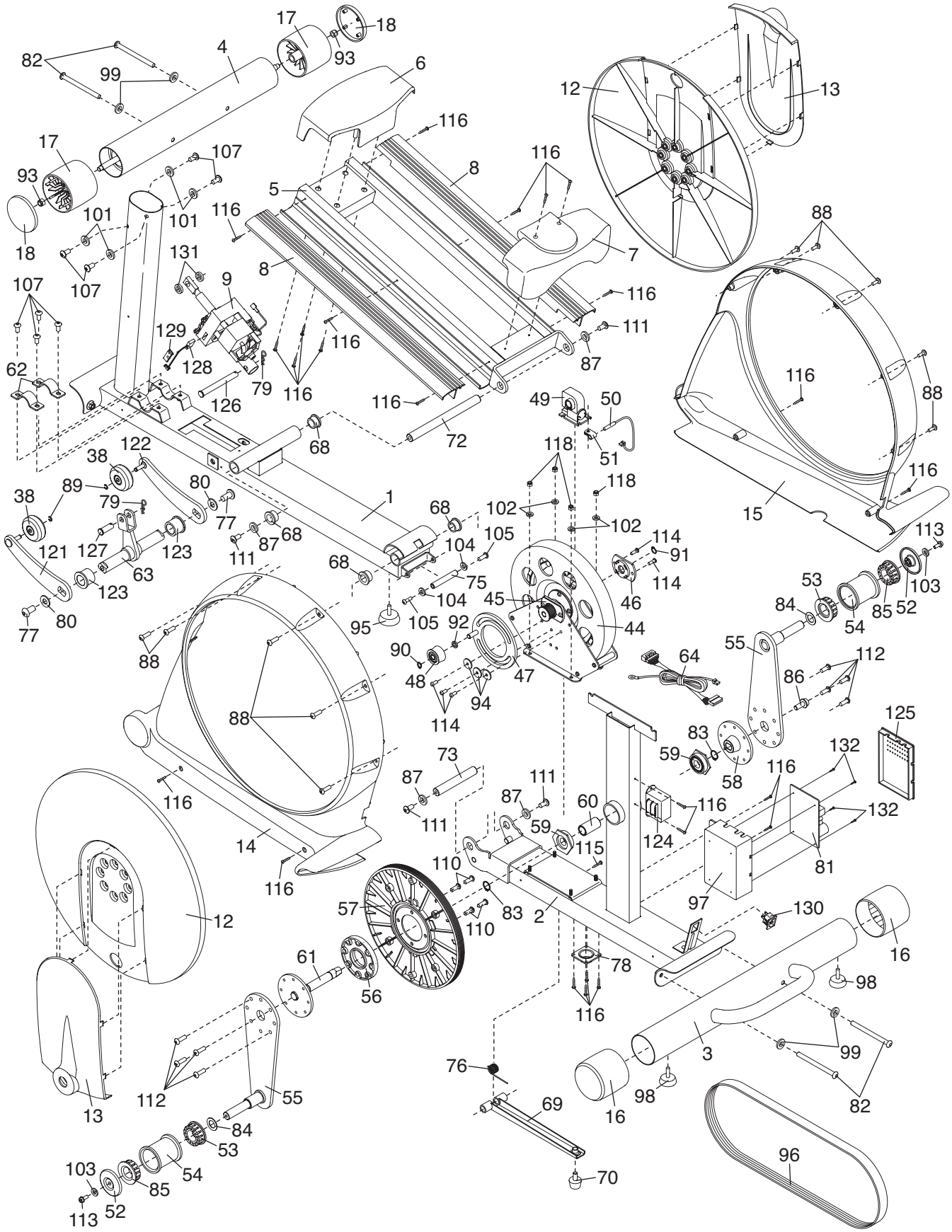

HOW TO ORDER REPLACEMENT PARTS

To order replacement parts, please see the front cover of this manual. To help us assist you, be prepared to provide the following information when contacting us:

- the MODEL NUMBER of the product (RBEL9906.1)
- the NAME of the product (REEBOK 1000 ZX elliptical exerciser)
- the SERIAL NUMBER of the product (see the front cover of this manual)
- the KEY NUMBER and DESCRIPTION of the part(s) (see pages 24 to 27)

LIMITED WARRANTY

ICON Health & Fitness, Inc. (ICON) warrants this product to be free from defects in workmanship and material, under normal use and service conditions, for a period of one (1) year from the date of purchase. There is a lifetime warranty on the frame. This warranty extends only to the original purchaser. ICON's obligation under this warranty is limited to replacing or repairing, at ICON's option, the product through one of its authorized service centers. All repairs for which warranty claims are made must be pre-authorized by ICON. If the product is shipped to a service center, freight charges to and from the service center will be the customer's responsibility. For in-home service, the customer will be responsible for a minimal trip charge. This warranty does not extend to any product or damage to a product caused by or attributable to freight damage, abuse, misuse, improper or abnormal usage or repairs not provided by an ICON authorized service center; products used for commercial or rental purposes; or products used as store display models. No other warranty beyond that specifically set forth above is authorized by ICON.

ICON is not responsible or liable for indirect, special or consequential damages arising out of or in connection with the use or performance of the product or damages with respect to any economic loss, loss of property, loss of revenues or profits, loss of enjoyment or use, costs of removal or installation or other consequential damages of whatsoever nature. Some states do not allow the exclusion or limitation of incidental or consequential damages. Accordingly, the above limitation may not apply to you.

The warranty extended hereunder is in lieu of any and all other warranties and any implied warranties of merchantability or fitness for a particular purpose is limited in its scope and duration to the terms set forth herein. Some states do not allow limitations on how long an implied warranty lasts. Accordingly, the above limitation may not apply to you.

This warranty gives you specific legal rights. You may also have other rights which vary from state to state.

ICON HEALTH & FITNESS, INC., 1500 S. 1000 W., LOGAN, UT 84321-9813

Part No. 249904 R1206A

Printed in China © 2006 ICON IP, Inc.