BE817

Frost Free Fridge Freezer

INSTALLATION AND USER INSTRUCTIONS

You must read these instructions prior to using the appliance and retain them for future reference.

belling

Contents

Introduction & safety warnings 2
Electrical requirements 3
Transportation instructions 4
Installation instructions - guidelines 5
Getting to know your fridge / freezer 6
Suggested arrangement of food in the fridge / freezer 7
Temperature control and adjustment 8
Getting Started 9
Storing frozen food 9
Freezing fresh food 10
Making ice cubes 10
Defrosting 11
Cleaning and care 12
Replacing the interior light bulb 13
Do's and don'ts 14
Energy saving tips 15
Problem solving 15
Reversing the doors 16
Installation instructions - detailed step by step 16
Guarantee details 25
How to obtain service 26
Tecnical data 27
Wiring Diagram 28
Customer Care ..... **back cover**

Please keep this handbook for future reference, or for anyone else who may use the appliance.

Congratulations on your choice of a **Belling** quality Appliance which has been designed to give you service for many years.

WARNING !
IMPORTANT !
DO NOT connect your appliance to the electricity supply until all packing and transit protectors have been removed.
• Leave to stand for at least 4 hours before switching on to allow compressor oil to settle if transported horizontally.
• If you are discarding an old refrigerator with a lock or latch fitted to the door, disable the lock/latch, ensure that it is left in a safe condition to prevent the entrapment of young children.
• This fridge/freezer must only be used for its intended purpose i.e the storing and freezing of edible foodstuff.
• Do not dispose of the appliance on a fire. At **Belling**, the care and protection of our environment is an ongoing commitment. This appliance which is among the latest range introduced is particularly environment friendly. Your appliance contains non CFC / HFC natural substances in the cooling system (Called R600a) and in the insulation (Called cyclopentane) which are potentially flammable if exposed to fire. Therefore, take care not to damage, the cooling circuit / pipes of the appliance in transportation and in use. In case of a damage do not expose the appliance to fire, potential ignition source and immediately ventilate the room where the appliance is situated.
• We suggest you contact your local authority for disposal information and facilities available.
• We do not recommend use of this appliance in an unheated, cold room.
(E.g.: garage, conservatory, annex, shed, out-house etc.)
• To obtain the best possible performance and trouble free operation from your appliance it is very important to carefully read these instructions.
• Ensure that the plug remains readily accessible. Do not use multiple adapter bar.
• Failure to observe these instructions may invalidate your right to free service during the guarantee period.
• Route electrical supply cord to allow easy connection and disconnection after installation.
• We recommend a separate switch be employed to ensure easy switch on / off.
WARNING- Keep ventilation openings, in the appliance enclosure or in the built-in structure,clear of obstruction.
WARNING- Do not use mechanical devices or other means to accelerate the defrosting process, other than those recommended by the manufacturer.
WARNING- Do not damage the refrigerant circuit.
WARNING- Do not use electrical appliances inside the food storage compartments of the appliance, unless they are of the type recommended by the manufacturer.
• We suggest you keep these instructions in a safe place for easy reference.
• This appliance is not intended for use by persons (including children) with reduced physical, sensory or mental capabilities, or lack of experience and knowledge, unless they have been given supervision or instruction concerning use of the appliance by a person responsible for their safety.
• Children should be supervised to ensure that they do not play with the appliance.

ELECTRICAL REQUIREMENTS

Before you insert the plug into the wall socket make sure that the voltage and the frequency shown in the rating plate inside the appliance corresponds to your electricity supply. Rating label is on the left hand side of freezer inner liner. We recommend that this appliance is connected to the mains supply via a suitable switched and fused socket in a readily accessible position. Should the mains lead of the appliance become damaged or should it need replacing at any time, it must be replaced by a special purpose made mains lead which can only be obtained from a Belling Authorised Service Agent.

WARNING! THIS APPLIANCE MUST BE EARTHED

If the fitted moulded plug is not suitable for your socket, then the plug should be cut off and an appropriate plug fitted. Destroy the old plug which is cut off as a plug with bared cord could cause a shock hazard if inserted into a socket elsewhere in the house.

The moulded plug on this appliance incorporates a 13 A fuse. Should the fuse need to be replaced an ASTABEAB approved BS 1362 fuse of the same rating must be used. Do not forget to refit the fuse cover. In the event of losing the fuse cover the plug must not be used until a replacement fuse cover has been fitted. Colour of the replacement fuse cover must be the same colour as that visible on the pin face of the plug. Fuse covers are available from any good electrical store.

IMPORTANT! FITTING A DIFFERENT PLUG

As the colours of the wires in themains lead of this appliance may not correspond with the colouredmarkings identifying the terminals in your plug proceed as follows: (See diagram).

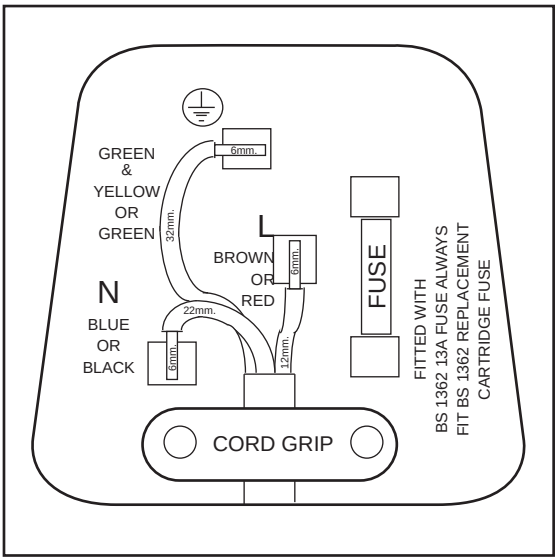

1. Connect the green-yellow or green (Earth) wire to the terminal in the plug marked 'E' or with the symbol ⏚ or coloured green and yellow or green.

2. Connect the blue (Neutral) wire to the terminal in the plug marked 'N' or coloured black.

3. Connect the brown (Live) wire to the terminal in the plug marked 'L' or coloured red. With alternative plugs a 13 A fuse must be fitted either in the plug or adaptor or in the main fuse box.If in doubt contact a qualified electrician.

TRANSPORTATION INSTRUCTIONS

1. The appliance should be transported only in a vertical upright position. The packing as supplied must be intact during transportation.
2. If during the course of transport the appliance has to be transported horizontally, it must only be laid on its left hand side when standing in the front of the appliance. After bringing it to upright position,it must not be operated for at least 4 hours to allow the system to settle.
3. Failure to comply with the above instructions could result in damage occuring to the appliance. The manufacturer will not be held responsible if these instructions are disregarded.
4. The appliance must be protected against rain, moisture and other atmospheric influences.
5. When positioning your appliance take care not to damage your flooring, kitchen furniture, related parts and doors, pipes, wall coverings etc. Do not move the appliance by pulling by the door.
6. Empty any water in the drain tray before moving. See section ‘Defrosting’ and ‘Care & cleaning’ for further information.
7. Make sure that the defrost water pipe at the back of the product is fixed to the plastic evaporating pan on the top of the compressor, to avoid defrost water spillage on the floor.

   IMPORTANT : Care must be taken while cleaning / carrying the appliance to avoid touching the bottom of the condenser metal wires at the back of the appliance as you might injure your fingers and hands.

   Do not attempt to sit or stand on top of your appliance as it is not designed for such use. You could injure yourself or damage the appliance.

   IMPORTANT: Make sure that mains cable is not caught under the appliance during and after carrying / moving the appliance, to avoid the mains cable becoming cut or damaged."

   Do not allow children to play with the appliance or tamper with the controls. **Belling** declines to accept any liability should the instructions not be followed.

- This appliance is not intended for use by persons (including children) with reduced physical, sensory or mental capabilities, or lack of experience and knowledge, unless they have been given supervision or instruction concerning use of the appliance by a person responsible for their safety.

- Children should be supervised to ensure that they do not play with the appliance.

INSTALLATION INSTRUCTIONS

1. The space in the room where the appliance is installed must not be smaller than 10 cubic metres.

2. See for detailed Installation Instructions including reversing door opening direction.

3. Do not put your fridge freezer in a cold room where the temperature is likely to go below +5 degrees C (41 degrees F) during night time and/or especially in winter.

This fridge freezer has been designed to operate in ambient temperatures between +5 and +32 degrees C (41 and 90 degrees F) Therefore if the appliance is installed in an unheated/cold room (eg: conservatory/annex/ shed/garage etc) then the appliance will not operate causing the freezer compartment to run warmer and as a result the storage time of frozen food may be reduced.

4. Do not place the appliance near cookers, radiators or in direct sunlight as this will cause your appliance to work harder. If installed next to a source of heat or freezer, maintain the following minimum side clearances:

From Cookers	50 mm (2")
From Radiators	300 mm (12")
From Freezers	25 mm (1")

5. Refer to cleaning and care section to prepare your appliance for use.

6. A special receptacle is supplied to store the mains plug during transit.
The receptacle is fixed at the back of the cabinet, on the side of the compressor. (See diagram) Gently remove the plug from the receptacle. Never pull the mains cord, you may damage the appliance. In the case of transportation,ensure you locate the plug in the receptacle provided to avoid transit damage.

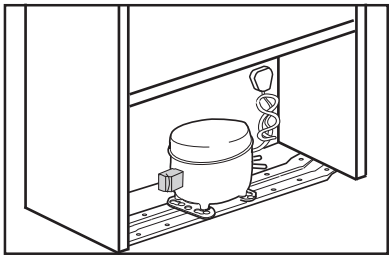

Getting to know your appliance

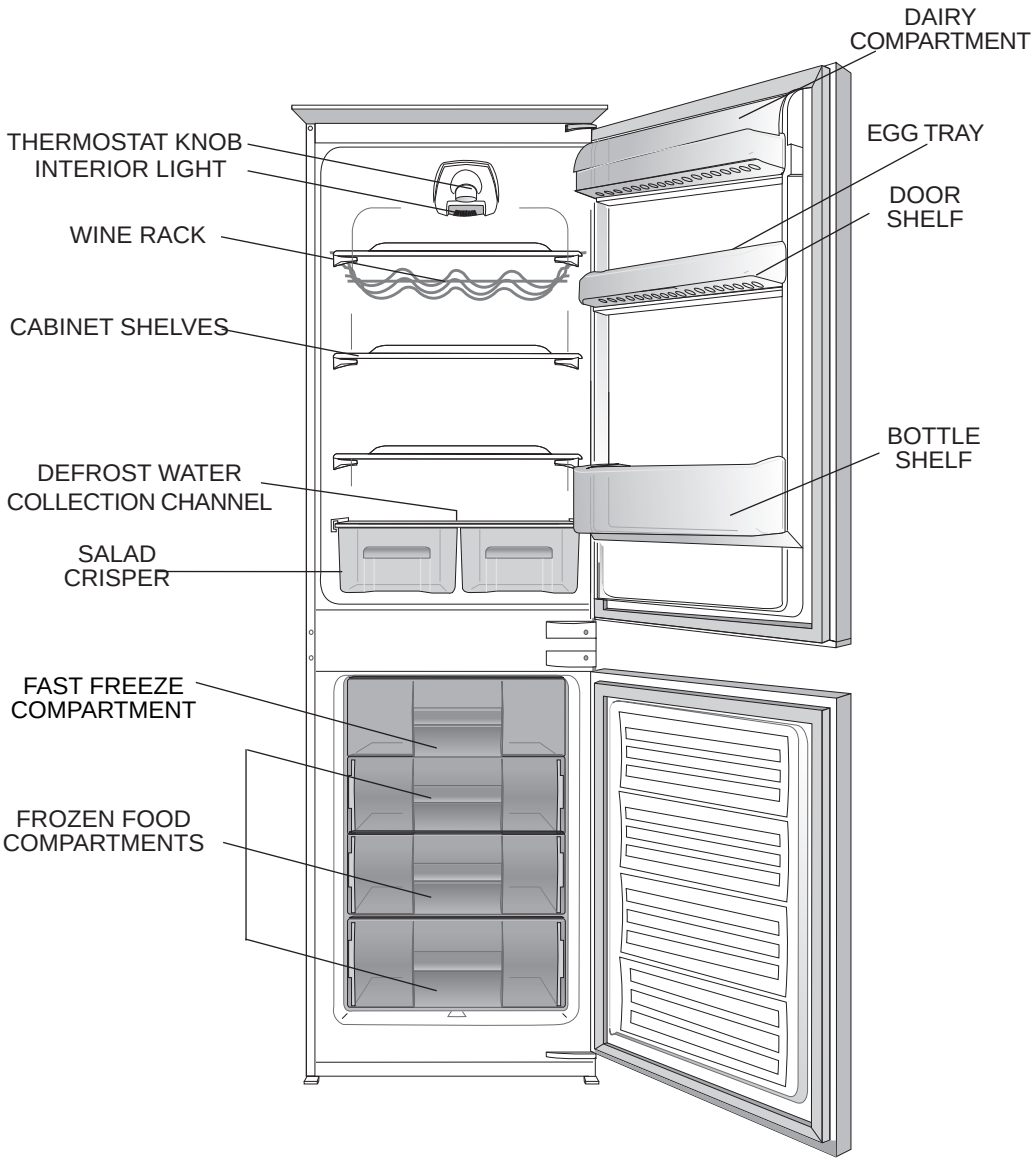

SUGGESTED ARRANGEMENT OF FOOD IN THE FRIDGE/FREEZER

Arrangement Examples (See diagram)

1. Baked, chilled cooked food, dairy products, cans.
2. Wine,
3. Meat, sausages, cold cuts.
4. Fruit, vegetables, salads.
5. Frozen food and freezing of fresh food.
6. Frozen food.
7. Butter, cheese.
8. Small bottles, cans, tubes.
9. Eggs.
10. Tall, large bottles, beverages.

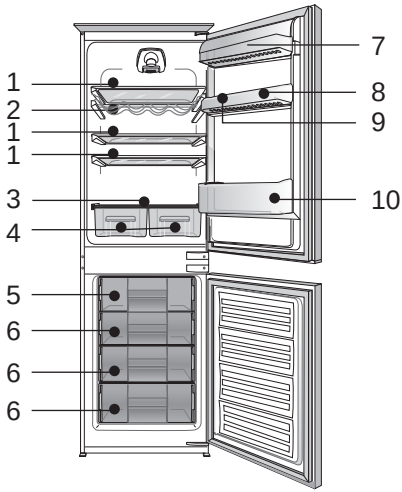

The following guidelines and recommendations are suggested to obtain the best results and storage hygiene.

1. The fridge compartment is for the short term storage of fresh food and drinks.
2. The freezer compartment is ✳*** rated and suitable for the freezing and storage of pre frozen food. The recommendation for ✳*** storage as stated on the food packaging should be observed at all times.
3. Cooked dishes must be stored in airtight covered containers.
4. Fresh wrapped produce can be placed on the shelf. Fresh fruit and vegetables should be cleaned and stored in the crisper bins.
5. Bottles can be placed in the door section.
6. To store raw meat, wrap in polythene bags and place on the lowest shelf. Do not allow to come into contact with cooked food to avoid contamination. For safety, only store raw meat for two to three days.
7. Keep the food packed wrapped or covered. Allow hot food and beverages to cool before placing them in the fridge. Do not store explosive substances. High proof alcohol must be stored upright in sealed containers. Left over canned food should not be stored in the can.
8. Fizzy drinks should not be frozen and products such as flavoured water ices should not be consumed too cold.
9. Some fruit and vegetables suffer damage if kept at temperatures near 0°C. The refore wrap pineapples, melons, cucumbers, tomatoes and similar produce in polythene bags.
10. Place chilled cooked food and similar food near the rear of the fridge inner liner where the cold wall is located.
11. Shelves, racks, crisper bins, drawers, flaps, bottle grippers are all removable.
12. Do not leave frozen food at room temperature to thaw; the best way to defrost food is to put it in the fridge to thaw slowly. Make sure you avoid defrosting food or food juices drip onto other food.
13. For hygiene reasons, always wrap food using a suitable packaging material before storing in your appliance to avoid contact with the appliance surface.

TEMPERATURE CONTROL AND ADJUSTMENT

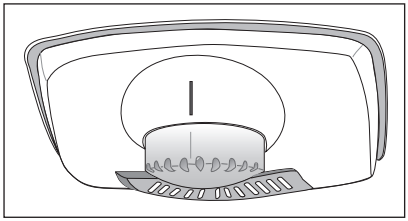

Operating temperatures are controlled by the thermostat knob (see diagram) located on the ceiling of fridge compartment. Settings may be made from 1 to 5, 5 being the coldest position. When the appliance is switched on for the first time, the thermostat should be adjusted so that after 24 hours, the average fridge temperature is no higher than +5°C (+41°F). We recommend you set the thermostat half way between the 1 and 5 setting and monitor to obtain the desired temperature i. e. towards 5 you will obtain a colder fridge temperature and vice versa. Some sections of the fridge may be cooler or warmer (such as the salad crisper and the top part of the cabinet) which is quite normal.
The normal storage temperature of the freezer should be -18°C (0°F). Lower temperatures may be obtained by adjusting thermostat knob towards 5 position.

We recommend that you check the temperature with an accurate thermometer to ensure that the storage compartments are kept to the desired temperature.
Remember you must take your reading very quickly since the thermometer temperature will rise very rapidly after you remove it from the freezer.
Please remember each time the door is opened cold air escapes and the internal temperature rises. Therefore never leave the door open and ensure it is closed immediately after food is put in or removed.

In case of a temporary ice build up in the fridge compartment, reduce the thermostat setting to 1, monitoring at the same time that the fridge temperature is maximum +5 degrees C [41 degrees F]. Once the ice build up disappears and the appliance starts auto defrosting again as normal, then you may increase the thermostat setting, if required.

GETTING STARTED

Before you start using the fridge/freezer check that:

1. The interior is dry and air can circulate freely at the rear of the cabinet.
2. Clean the interior as recommended under "CLEANING AND CARE."
3. Insert the plug into the wall socket and switch on the electricity supply.
• When the door is open the fridge interior light will come on.
4. You will hear a noise as the compressor starts up. The liquid and gases sealed within the refrigeration system may also give rise to noise, whether the compressor is running or not which is quite normal.
5. Set the thermostat knob half way between 1 and 5.
6. Front edges of the cabinet may feel warm. This is normal. These areas are designed to be warm to avoid condensation.

7. "Do not load the appliance immediately it is switched on. Wait until the correct storage temperature has been reached. We recommend that you check the temperature with an accurate thermometer (see; Temperature Control and Adjustment)"

STORING FROZEN FOOD

Prepacked commercially frozen food should be stored in accordance with the frozen food manufacturer's instructions for a ✳*** frozen food storage compartment.
To ensure that the high quality achieved by the frozen food manufacturer and the food retailer is maintained, the following should be remembered:
1. Put packets in the freezer as quickly as possible after purchase.
2. Ensure that contents are labelled and dated.
3. Do not exceed "Use By", "Best Before" dates on the packaging.

If there is a power failure do not open the door. Frozen food should not be affected if the failure lasts for less than 14 hrs. If the failure is longer, then the food should be checked and either eaten immediately or cooked and then re-frozen.

FREEZING FRESH FOOD

Please observe the following instructions to obtain the best results.
Do not freeze too large a quantity at any one time. The quality of the food is best preserved when it is frozen right through to the core as quickly as possible.
Do not exceed the freezing capacity of your appliance in 24 h which is 4 kg (9 lb)

Placing warm food into the freezer compartment causes the refrigeration compressor to operate continuously until the food is frozen solid. This can temporarily lead to excessive cooling of the refrigeration compartment.

You may place fresh food to be frozen in any part of the freezer.

Take special care not to mix already frozen food and fresh food.

MAKING ICE CUBES

Fill the ice - cube tray 3/4 full with water. Loosen frozen trays with the handle of a spoon, never use sharp edged objects such as knives, forks.

Note: If freshly made ice cubes are not consumed for several weeks, they will slowly reduce in size and eventually disappear completely.

DEFROSTING

A) FRIDGE COMPARTMENT

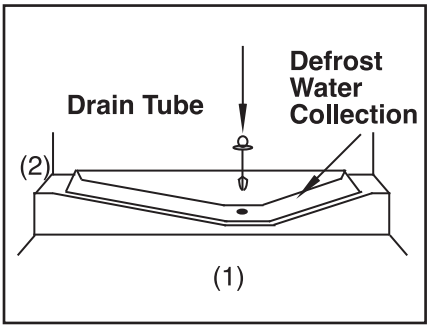

The fridge compartment defrosts automatically. The defrosting water runs to the drain tube via a collection container at the back of the appliance (1).
(see diagram) During defrosting water droplets may form at the back of the fridge compartment where concealed evaporator is located. Some droplets may remain on the liner and refreeze when defrosting is completed. Do not use pointed or sharp edged objects such as knives, forks to remove the droplets which have frozen.
If at any time the defrost water does not drain from the collection channel, check to ensure that no food particles have blocked the drain tube. The drain tube can be cleared by pushing the special plastic plunger provided down the drain tube (2). If the frost layer reaches about 1/4"(7 mm), reduce the setting (i.e. from 4 to 1) to restart automatic defrosting.

B) FREEZER COMPARTMENT

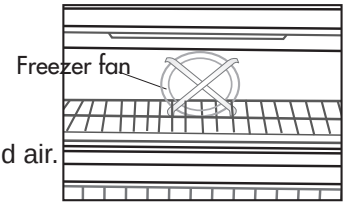

The freezer compartment defrosts automatically.

WARNINGS!

The fan inside the freezer compartment circulates cold air.
Never insert any object through the guard.
Do not allow children to play with the freezer fan.
Never store products that contain inflammable propellant gas (eg dispensers, spray cans etc.) or explosive substances.
Don’t cover the shelves with any protective materials, which may obstruct air circulation.
Do not allow children to play with the appliance or tamper with the controls.
Do not obstruct the freezer fan guard to ensure that you obtain the best possible performance from your appliance.

CLEANING AND CARE

** We recommend that you switch off the appliance at the socket outlet and pull out the mains plug before cleaning.

** Never use any sharp abrasive instrument, soap, household cleaner, detergent and wax polish for cleaning.

** Use luke warm water to clean the cabinet of the appliance and wipe it dry.

** Use a damp cloth wrung out in a solution of one teaspoon of bicarbonate of soda to one pint of water to clean the interior and wipe it dry.

** Make sure that no water enters the lamp housing.

** Excess deposits of ice should be removed on a regular basis with the handle of a spoon. Large accumulation of ice will impair the performance of the appliance.

** If the appliance is not going to be used for a long period of time switch it off, remove all food, clean it and leave the door ajar.

** Check door seals regularly to ensure they are clean and free from food particles.

** Removal of door tray

- To remove door racks, remove all the contents and then simply push the door rack upwards from the base.

** To remove a freezer drawer, pull it as far as possible, and then tilt it upwards, and then pull it out completely.

REPLACING THE INTERIOR LIGHT BULB (See diagram)

Should the light fail to work, proceed as follows.

1. Switch off at the socket outlet and pull out the mains plug.

• You may find it useful to remove shelves for easy access.

2. Use a flat tipped screwdriver to remove the light diffuser cover by inserting the blade in the centre between diffuser and thermostat housing.

3. First check that the bulb hasn't worked loose by ensuring it is screwed securely in the holder. Replace the plug and switch on. If the bulb works, replace the light cover by pushing upwards to locate the lugs.

4. If the light still fails to work, switch off at the socket outlet and pull out the mains plug. Replace the bulb with a new 15 watt (max) screw cap (SES) bulb.

5. Carefully dispose of the burnt-out light bulb immediately.
Replacement light bulb can easily be obtained from a good local electrical or DIY store.

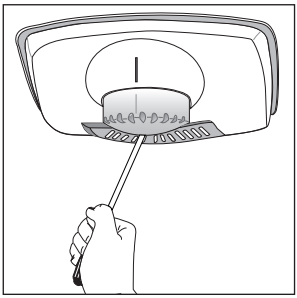

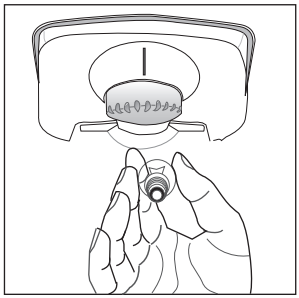

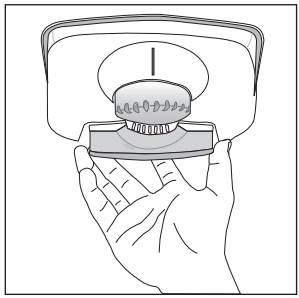

DO'S AND DON'TS

Do- Clean and defrost your appliance regularly (See "Defrosting")
Do- Keep raw meat and poultry below cooked food and dairy products.
Do- Take off any unusable leaves on vegetables and wipe off any soil.
Do- Leave lettuce, cabbage, parsley and cauliflower on the stem.
Do- Wrap cheese firstly in greaseproof paper and then in a polythene bag excluding as much air as possible. For best results take out of the fridge compartment an hour before eating.
Do- Wrap raw meat and poultry loosely in polythene or aluminium foil. This prevents drying.
Do- Wrap fish and offal in polythene bags.
Do- Wrap food which have a strong odour or can dry out in polythene bags, aluminium foil or place in an airtight container.
Do- Wrap bread well to keep it fresh.
Do- Chill white wines, beer, lager and mineral water before serving.
Do- Check contents of the freezer every so often.
Do- Keep food for as short a time as possible and adhere to "Best Before", "Use by" etc. dates.
Do- Store commercially frozen food in accordance with the instructions given on the packets that you buy.
Do- Always choose high quality fresh food and be sure it is thoroughly clean before you freeze it.
Do- Prepare fresh food for freezing in small portions to ensure rapid freezing.
Do- Wrap all food in aluminium foil or freezer quality polythene bags and make sure any air is excluded.
Do- Wrap frozen food when you buy it and put it in to the freezer as soon as possible.
Do- Defrost food in the fridge compartment.
Do- Remove ice cream from the freezer 10-20 minutes before serving.

Don't- Store bananas in your fridge compartment.
Don't- Store melon in your fridge. It can be chilled for short periods as long as it is wrapped to avoid it flavouring other food.
Don't- Store poisonous or any dangerous substances in your appliance. It has been designed for the storage of edible foodstuffs only.
Don't- Consume food which has been stored for an excessive time in the fridge.
Don't- Store cooked and fresh food together in the same container. They should be packaged and stored seperately.
Don't- Let defrosting food or food juices drip onto food.
Don't- Leave the door open for long periods as this will make the appliance more costly to run and cause excessive ice formation.
Don't- Use pointed sharp edged objects such as knives, forks to remove the ice.
Don't- Put hot food into the appliance. Let it cool down first.
Don't- Put liquid-filled bottles or sealed cans containing carbonated liquids into the freezer as they may burst.
Don't- Exceed the maximum freezing loads (4 kg in any 24 hours) when freezing fresh food.
Don't- Give children ice-cream and water ices direct from the freezer. The low temperature may cause 'freezer burns' on lips.
Don't- Freeze fizzy drinks.
Don't- Try to keep frozen food which has thawed, it should be eaten within 24 hours or cooked and refrozen.
Don't- Remove items from the freezer with wet hands.
Don't- Close the freezer door before placing the compartment cover in its place.
Don’t- Leave frozen food at room temperature to thaw; the best way to defrost food is to put it in the fridge to thaw slowly. Make sure you avoid defrosting food or food juices drip onto other food.

ENERGY SAVING TIPS

1- Ensure your appliance is installed in a well ventilated area. If the ambient temperature is low (but in no case lower than 5 degrees C), then the energy saving will be more. In this case, check temperatures of fridge and freezer compartments with an accurate thermometer and lower the thermostat setting (towards 1) if necessary.

2- Ensure the time between buying chilled/frozen food and placing them in your appliance is kept at minimum, particularly in summer. We recommend you use a cool bag or a special carrier bag to carry frozen food.

3- Do not leave the door (s) of your appliance open longer than necessary and ensure they are closed properly after each opening.

4- Defrost frozen food in the fridge compartment, so that frozen food acts as an ice pack to assist cooling in the fridge.

PROBLEM SOLVING

If the appliance does not operate when switched on, check whether:

• The plug is inserted properly in the socket and that the power supply is on. (To check the power supply to the socket, plug in another appliance)

• The fuse has blown/circuit breaker has tripped/main distribution switch has been turned off.

• The temperature control has been set correctly.

• New plug is wired correctly if you have changed the fitted moulded plug.

If the appliance is still not operating after the above checks, please refer to the section on “How To Obtain Service”.

Please ensure that above checks have been made as a charge will be made if no fault is found.

REVERSING THE DOORS

Top Door

1.Unscrew top hinge (4).
2.Carefully remove the top door.
3.Unscrew lower hinge (6)
4.Remove plastic plugs (10 &11).
5.Refit top hinge (4) as lower hinge (14) on the left hand side.
6.Replace top door
7.Refit lower hinge (6) as top hinge (16) on the left hand side.

Lower door

1.Unscrew top hinge (7)
2.Carefully remove the lower door.
3.Unscrew lower hinge (9).
4.Remove plastic plugs (12 &13).
5.Refit hinge (7) as lower hinge (19) on the left hand side.
6.Replace lower door
7.Refit lower hinge (9) as top hinge (21) on the left hand side.

Refit plastic plugs (10, 11, 12& 13) into the screw holes on the right hand side (17, 18, 22 & 23).

Screw the plastic fixing piece (1) to the top of the appliance.

Stick the decorative sealing strip (3) to the right hand side of the appliance.

REVERSING THE DOORS

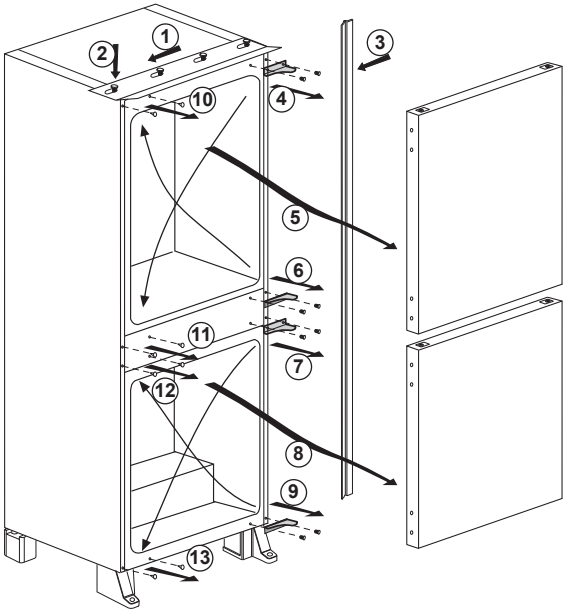

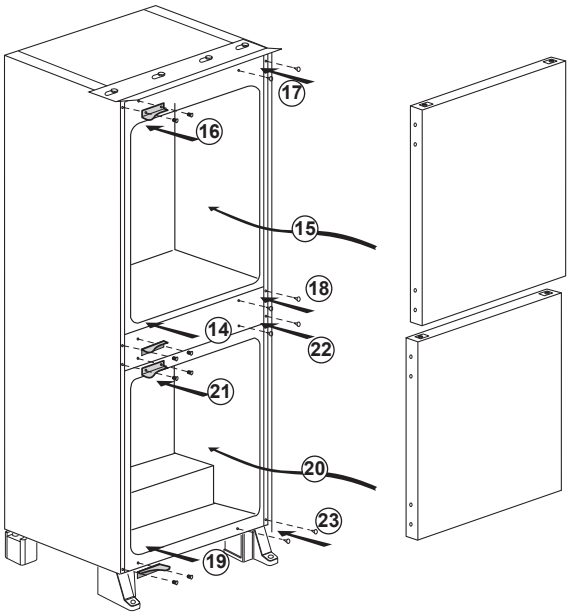

INSTALLATION INSTRUCTIONS (All dimensions are in mm)

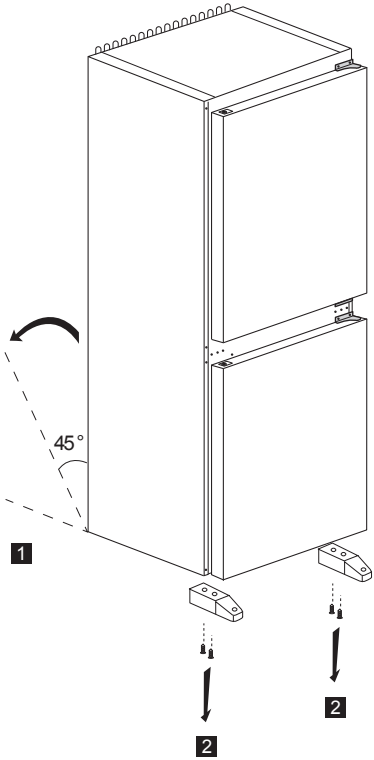

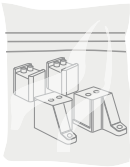

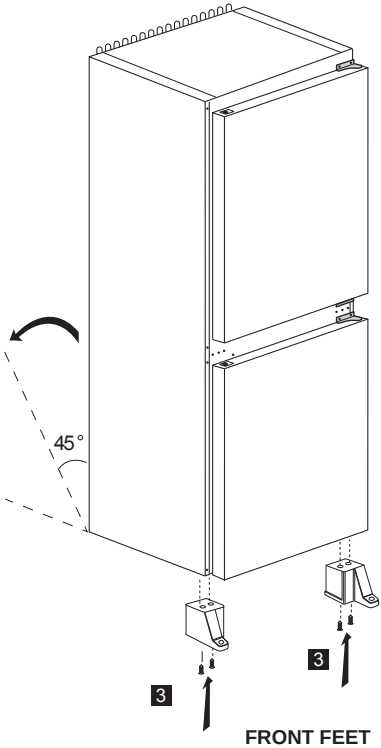

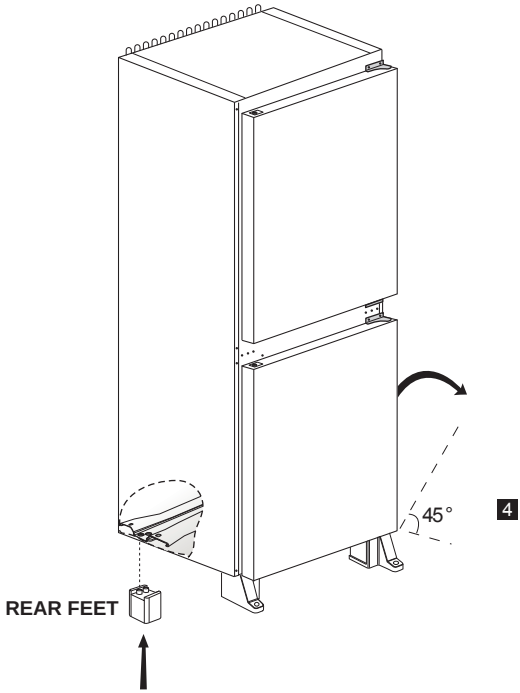

5

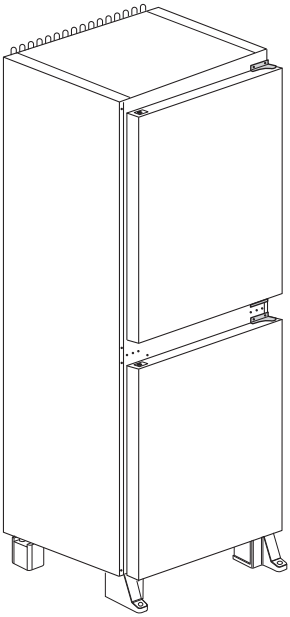

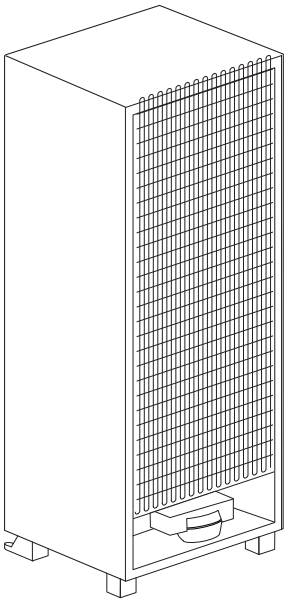

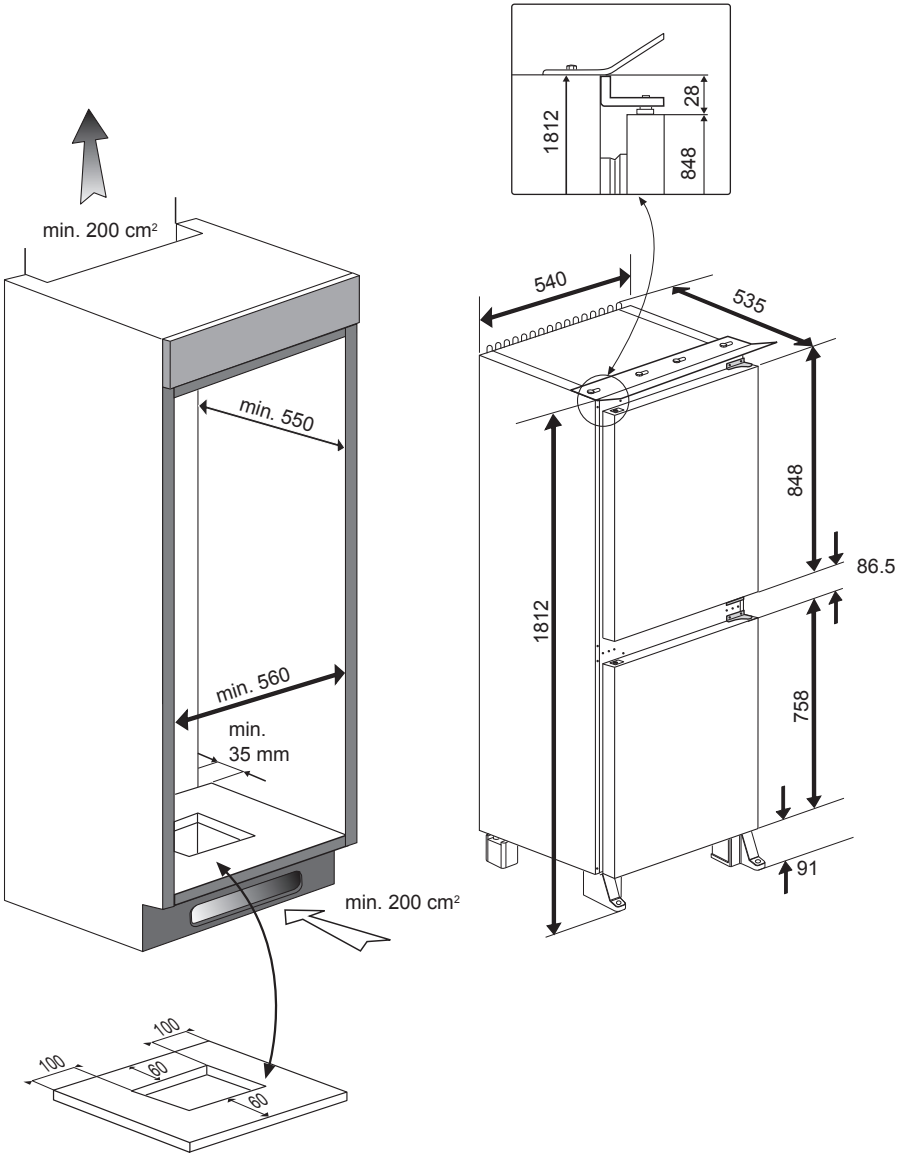
min. 200 cm²
min. 550
min. 560
min.
35 mm
min. 200 cm²
100
100
60
60
1812
28
848
540
535
848
86.5
1812
758
91

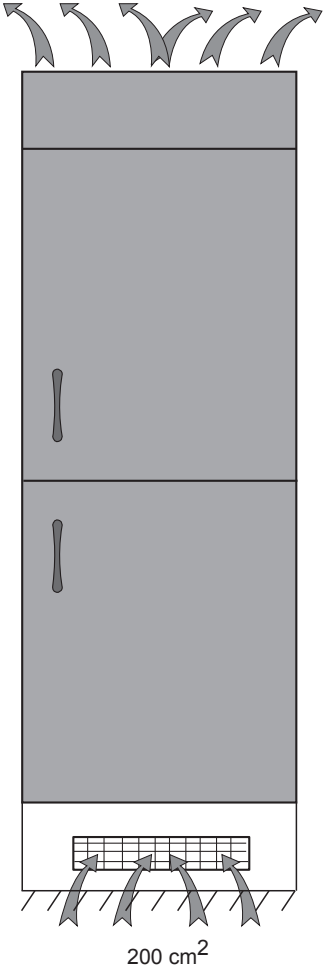
200 cm2

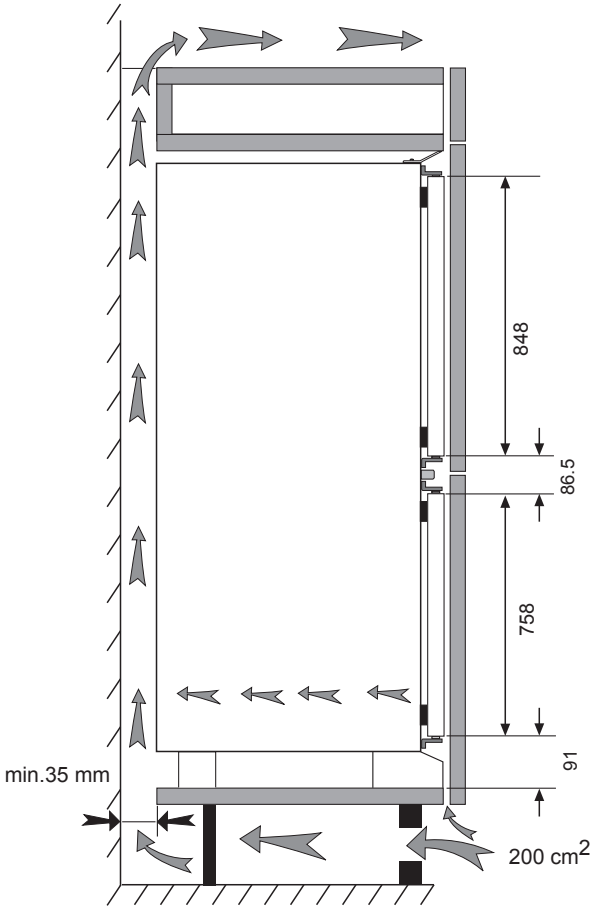
848
86.5
758
91
min.35 mm
200 cm2

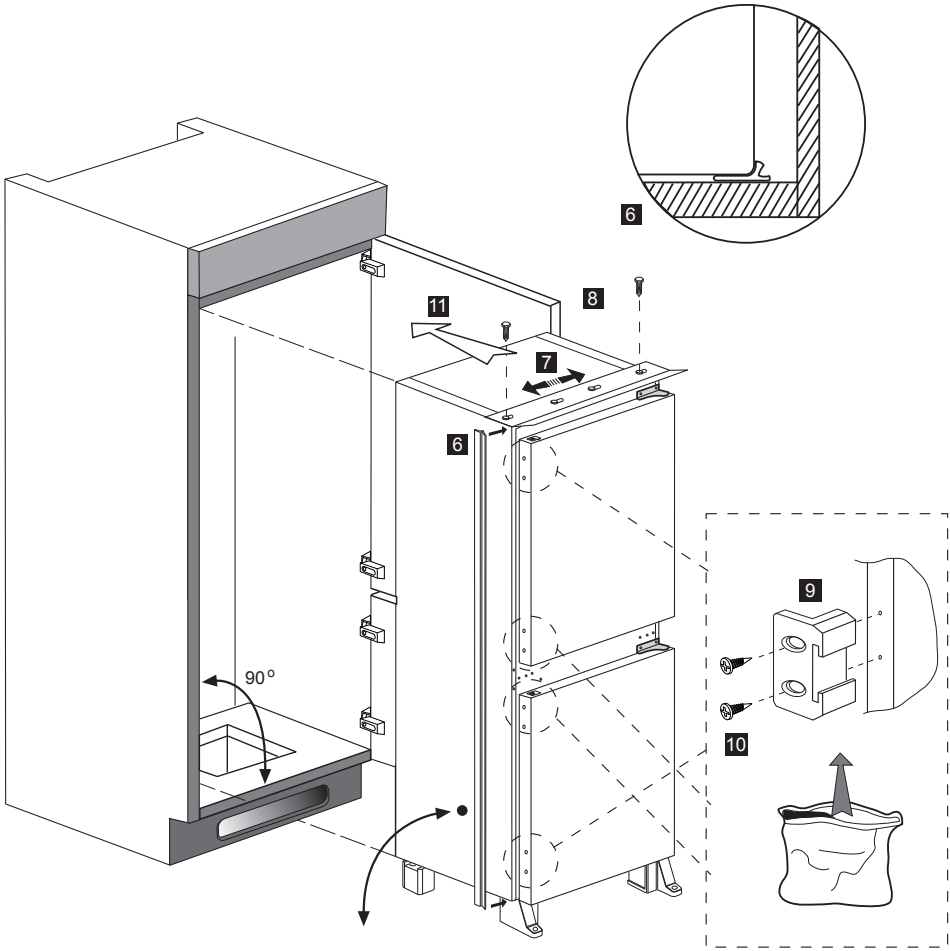
6
11
8
7
6
9
90°
10

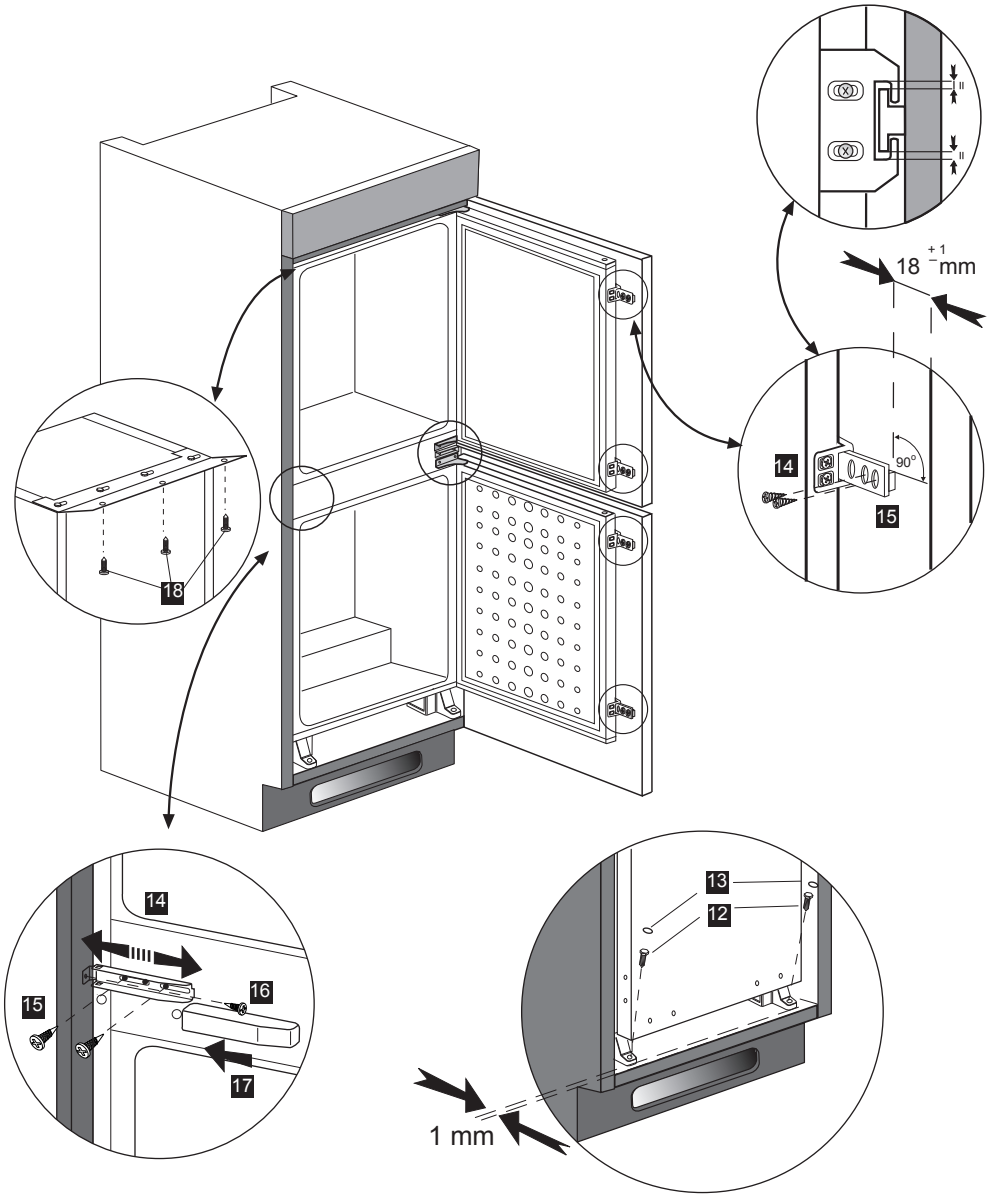
18 ±1 mm
90°
14
15
18
14
15
16
17
13
12
1 mm

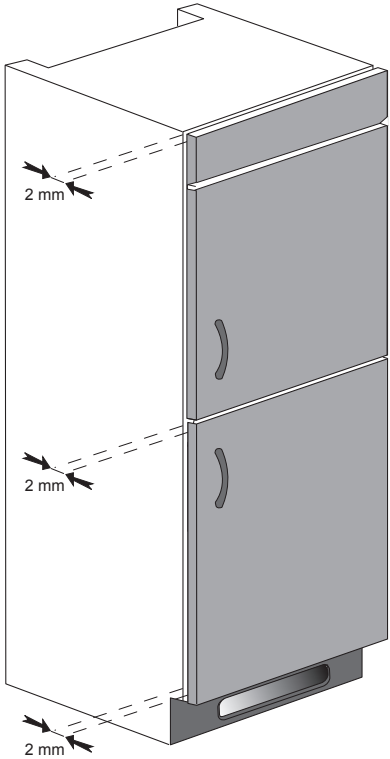

Ensure 2 mm gaps are obtained, adjust if necessary.

GUARANTEE DETAILS

Your new Belling product is guaranteed against the cost of breakdown repairs for twelve months from the date of the original purchase.

What is covered?

- Repairs necessary as a result of faulty materials, defective components or manufacturing defect.
- The cost of functional replacement parts, but excluding consumable items.
- The labour costs of a Belling approved repairer to carry out the repair.

What is not covered?

- Transit, delivery or accidental damage or misuse and abuse.
- Cabinet or appearance parts, including knobs, flaps, handles or container lids.
- Accessories or consumable items including but not limited to, ice trays, scrapers, cutlery baskets, filters and light bulbs.
- Repairs required as a result of unauthorised repair or inexpert installation that fails to meet the requirements contained in the user instruction book.
- Repairs to products used on commercial or non-residential household premises.
- Loss of frozen food in freezers or fridge/freezers. (Food loss insurance is often included within your household contents insurance policy, or may be available separately from your retailer).

Important notes.

- Your Belling product is designed and built for domestic household use only.
- The guarantee will be void if the product is installed or used in commercial or non-residential domestic household premises.
- The product must be correctly installed, located and operated in accordance with the instructions contained in the User Instructions Booklet provided.
- The guarantee is given only within the boundaries of the United Kingdom and the Republic of Ireland.
- The guarantee is applicable only to new products and is not transferable if the product is resold.
- Belling disclaims any liability for incidental or consequential damages. The guarantee does not in anyway diminish your statutory or legal rights.

HOW TO OBTAIN SERVICE

Please keep your purchase receipt or other proof of purchase in a safe place; you will need to have it should the product require attention under guarantee.
You should also complete the details below; it will help us assist you when requesting service.
(The model number is printed on the Instruction Booklet and the serial number is printed on the Rating Label affixed to the appliance)
Model No: Serial No: Retailer: Date of purchase:

Before requesting service please check the problem solving section in the Operating Instructions as a charge may be levied where no fault is found even though your product may still be under guarantee.

Service once the manufacturers guarantee has expired.
If you have purchased an extended guarantee please refer to the instructions contained within the extended guarantee agreement document.
Otherwise please call the appropriate number above where service can be obtained at a charge.

This product bears the selective sorting symbol for waste electrical and electronic equipment (WEEE).
This means that this product must be handled pursuant to European Directive 2002/96/EC in order to be recycled or dismantled to minimize its impact on the environment.
For further information, please contact your local or regional authorities.

Electronic products not included in the selective sorting process are potentially dangerous for the environment and human health due to the presence of hazardous substances.

Technical data

PERFORMANCE	BE817 Frost Free Fridge Freezer
Energy efficiency class	A
Energy consumption - Kwh/year	301
Net storage - vol fresh food ltrs (cu.ft.)	155 lt. (5.5)
Net storage - vol frozen food ltrs (cu.ft.)	62 lt. (2.2)
Total net vol - ltrs (cu.ft.)	217 lt. (7.7)
Frozen food compartment rating	4 STAR
Conservation time from failure	13 h.
Freezing capacity fresh food - kg (lb) / 24 hrs.	3.5 (7.9)
Climate class	SN
Operating noise level dB(A)	41

WIRING DIAGRAM

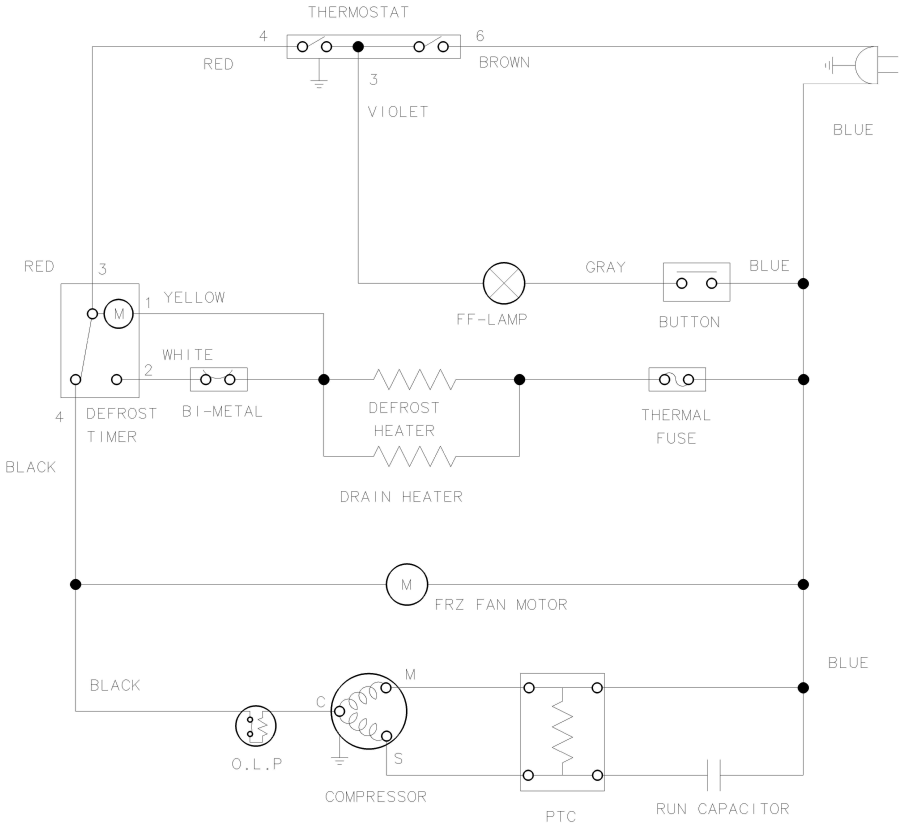

BELLING CUSTOMER CARE

In case of difficulty within the UK, please call
Belling Customer Care Centre Helpline on

0844 815 3746

When you dial this number you will hear a recorded message and be given a number of options.
This indicates that your call has been accepted and is being held in a queue.
Calls are answered in strict rotation as our Customer Care Representatives become available.
Enter appliance numbers here for future reference:

Model No

Serial No

Please ensure you have the above details (Model No and Serial No) to hand when calling Belling Customer Care. They are essential to booking your call.

belling

Stoney Lane, Prescot, Merseyside, L35 2XW

48 6119 00 00