LifeFitness

C3-0100-01 Exercise Bike

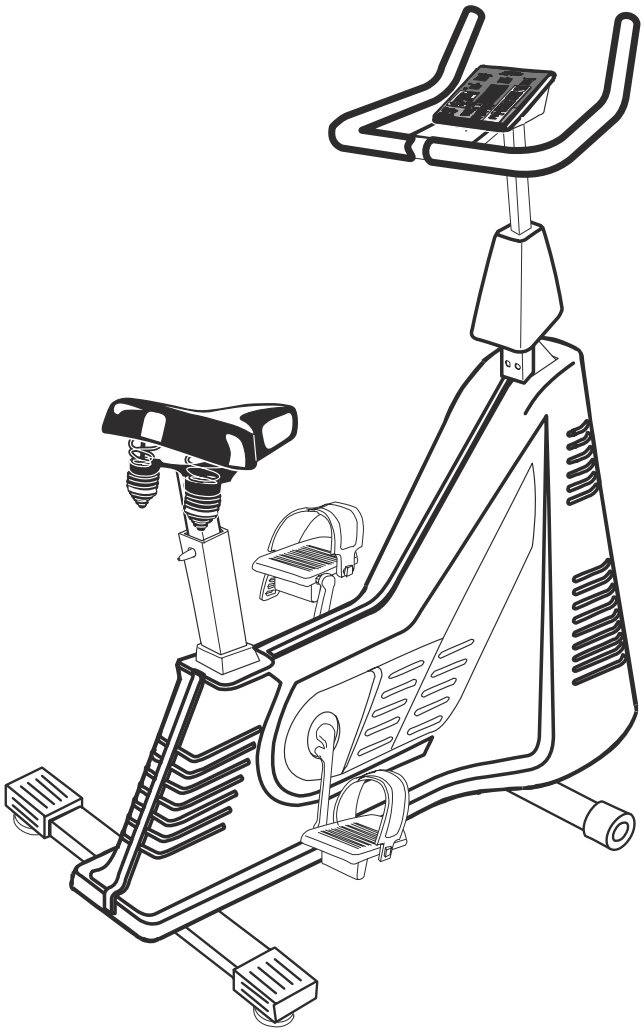

Customer Support Services

PARTS MANUAL

revised 05 Mar 2008

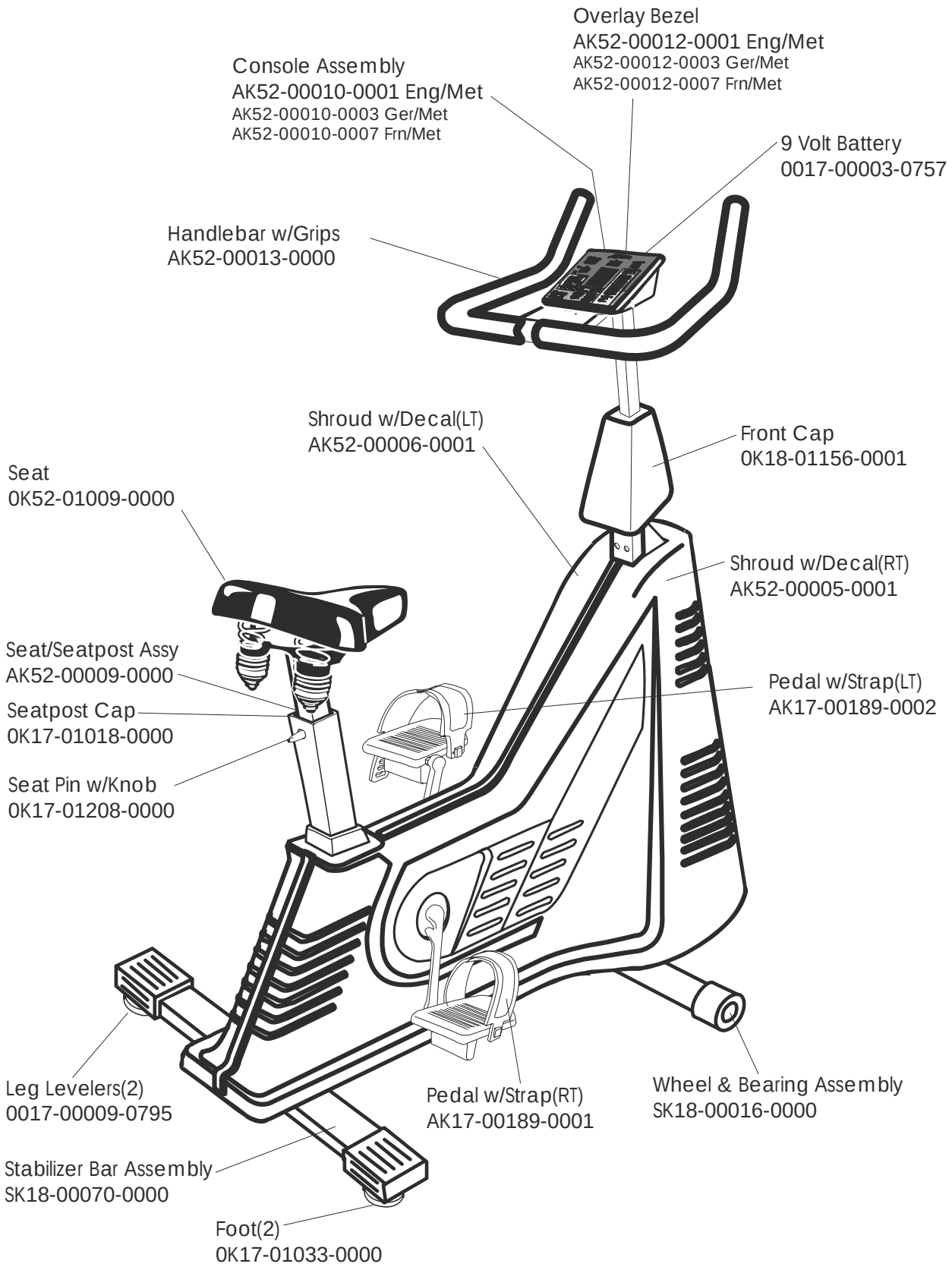
Overlay Bezel
AK52-00012-0001 Eng/Met
AK52-00012-0003 Ger/Met
AK52-00012-0007 Frn/Met
Console Assembly
AK52-00010-0001 Eng/Met
AK52-00010-0003 Ger/Met
AK52-00010-0007 Frn/Met
9 Volt Battery
0017-00003-0757
Handlebar w/Grips
AK52-00013-0000
Shroud w/Decal(LT)
AK52-00006-0001
Front Cap
0K18-01156-0001
Seat
0K52-01009-0000
Shroud w/Decal(RT)
AK52-00005-0001
Seat/Seatpost Assy
AK52-00009-0000
Pedal w/Strap(LT)
AK17-00189-0002
Seatpost Cap
0K17-01018-0000
Seat Pin w/Knob
0K17-01208-0000
Leg Levelers(2)
0017-00009-0795
Pedal w/Strap(RT)
AK17-00189-0001
Wheel & Bearing Assembly
SK18-00016-0000
Stabilizer Bar Assembly
SK18-00070-0000
Foot(2)
0K17-01033-0000

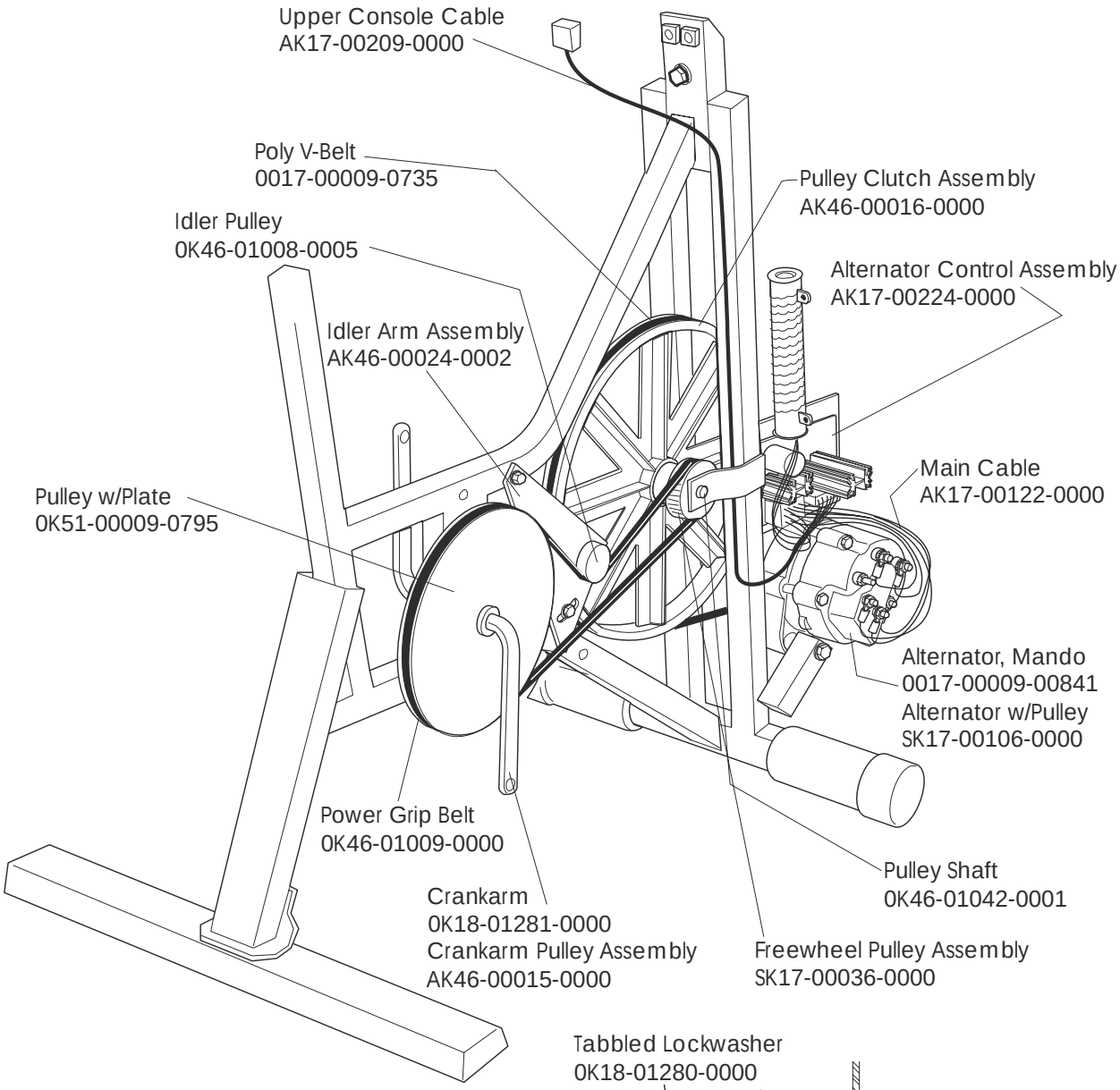
Upper Console Cable
AK17-00209-0000
Poly V-Belt
0017-00009-0735
Idler Pulley
0K46-01008-0005
Idler Arm Assembly
AK46-00024-0002
Pulley w/Plate
0K51-00009-0795
Pulley Clutch Assembly
AK46-00016-0000
Alternator Control Assembly
AK17-00224-0000
Main Cable
AK17-00122-0000
Alternator, Mando
0017-00009-00841
Alternator w/Pulley
SK17-00106-0000
Power Grip Belt
0K46-01009-0000
Crankarm
0K18-01281-0000
Crankarm Pulley Assembly
AK46-00015-0000
Pulley Shaft
0K46-01042-0001
Freewheel Pulley Assembly
SK17-00036-0000

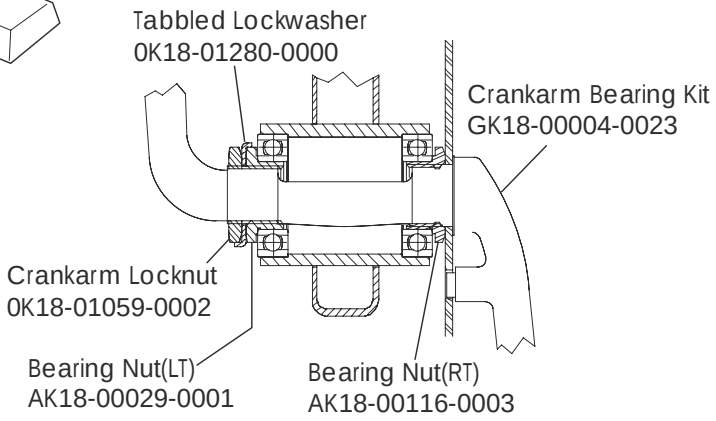
Tabbled Lockwasher
0K18-01280-0000
Crankarm Bearing Kit
GK18-00004-0023
Crankarm Locknut
0K18-01059-0002
Bearing Nut(LT)
AK18-00029-0001
Bearing Nut(RT)
AK18-00116-0003