G1227LVL 20040804

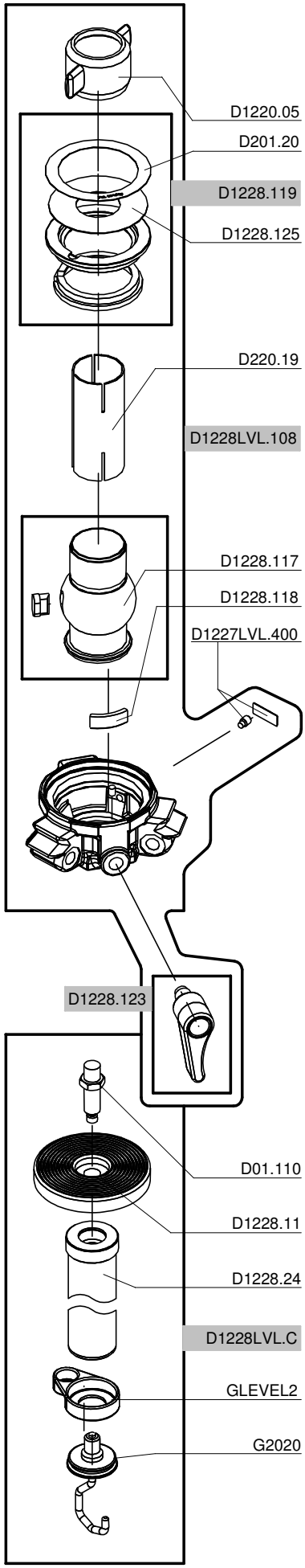

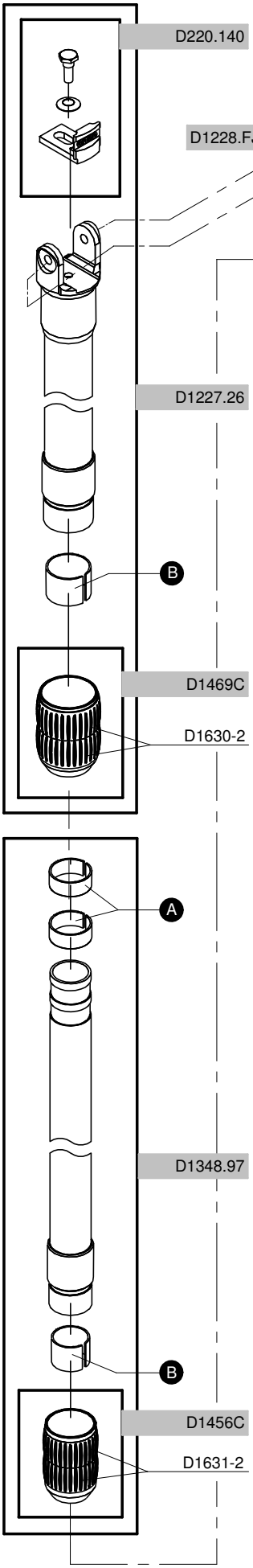

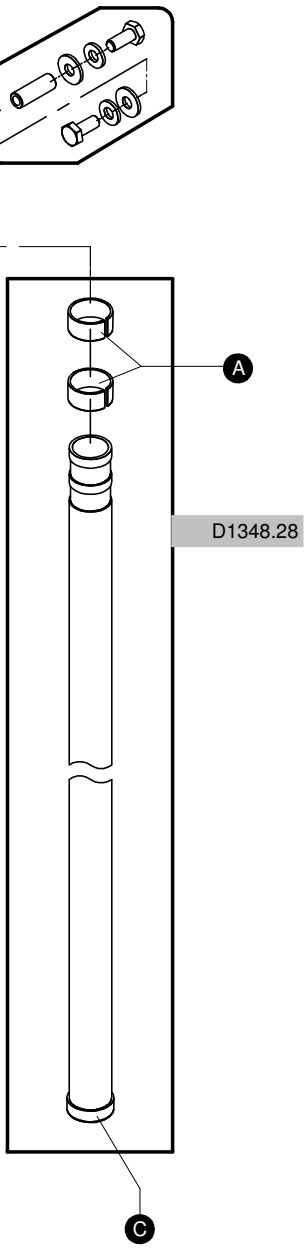

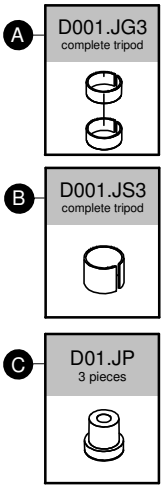

G1227LVL

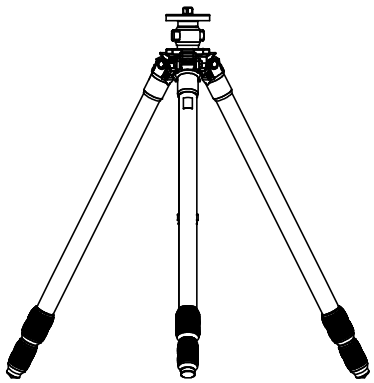

for serial numbers from G0000000