ELKAY®
SPECIFICATIONS

Hand Wash-Up Sink with Pedestal and Side Splashes Model CHSP1716LRSC

GENERAL

CHSP1716LRSC Type 304 (18-8) stainless steel hand wash-up sink with 7" (178mm) high right and left side splashes. Basin has 1-3/4" (45mm) radius coved corners. Full length 7" (178mm) high backsplash. Exposed surfaces have a brushed finish. Furnished with stainless steel pedestal and wall hanger. Carries NSF International Certification.

FURNISHED COMPLETE WITH:

SUPPLY: **LK399A**. Floor mounted, foot operated double pedal valve.

SPOUT: **LK395A**. Chrome plated 8-1/4" (210mm) high swing gooseneck spout with AE19A vandal-resistant anti-hose aerator. (Intermediate piping not included.)

DRAIN: **LK8**. Chrome plated stamped brass perforated strainer grid. 1-1/2" (38mm) O.D. x 4" (102mm) tailpiece.

TRAP: **LK500**. Chrome plated cast brass 1-1/2" (38mm) O.D. "P" trap with cleanout, 1-1/2" (38mm) O.D. waste arm to wall, and wall flange.

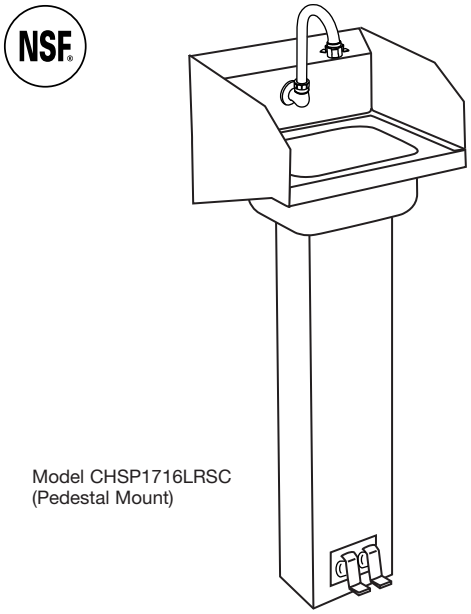

Model CHSP1716LRSC
(Pedestal Mount)

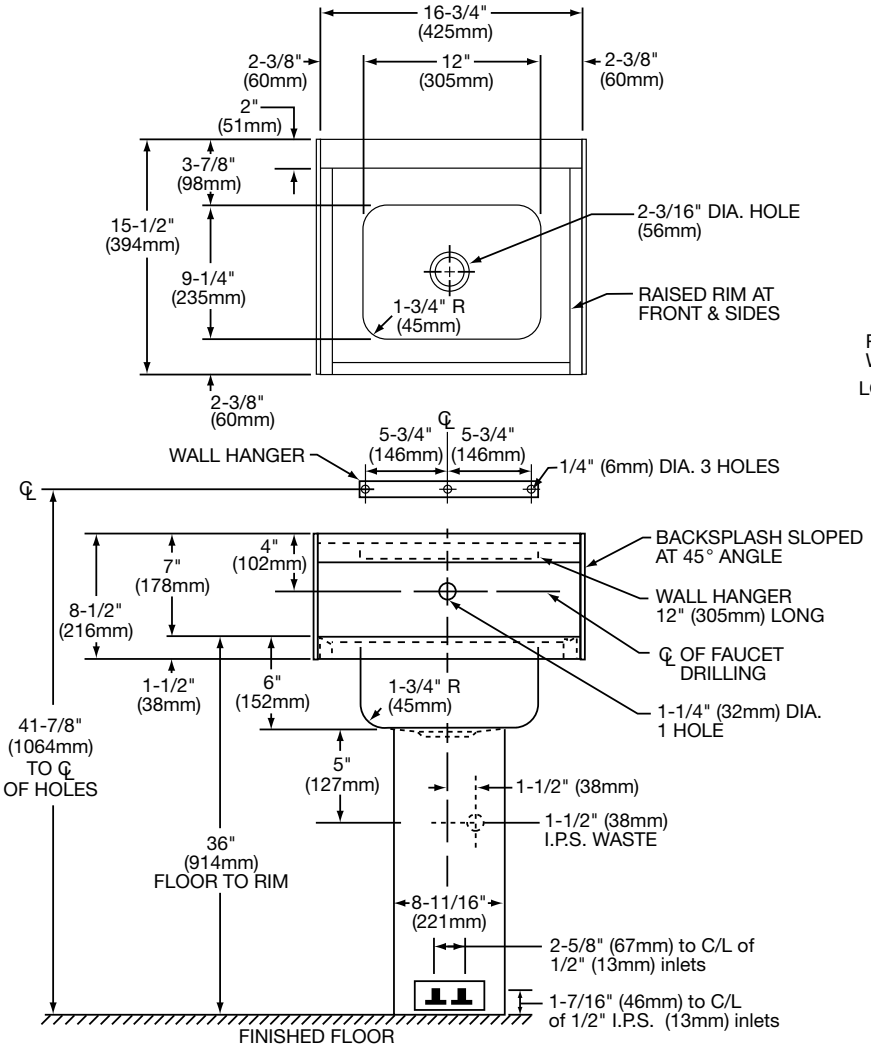

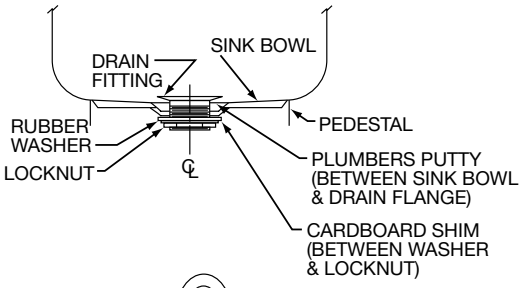

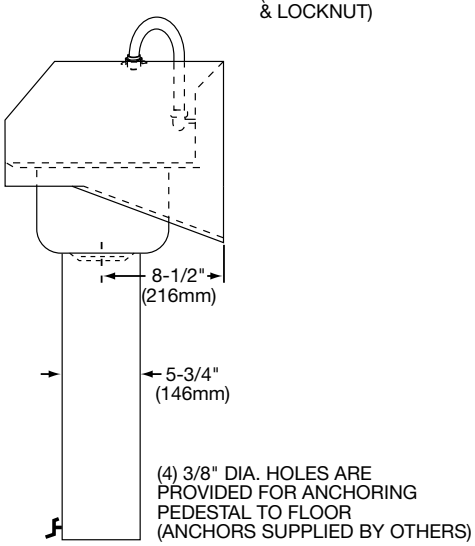

In keeping with our policy of continuing product improvement, Elkay reserves the right to change product specifications without notice.

©2003 Elkay