PARTS GUIDE

STOP

Using the Parts Guide below, check to make sure all parts are included in the box.
If parts are missing or damaged call 1-888-830-1326.
PLEASE DO NOT RETURN THIS PRODUCT TO THE STORE.

Before installing your fan, record the following information for your records and warranty assistance.

Fan Parts (Not Drawn to Scale)

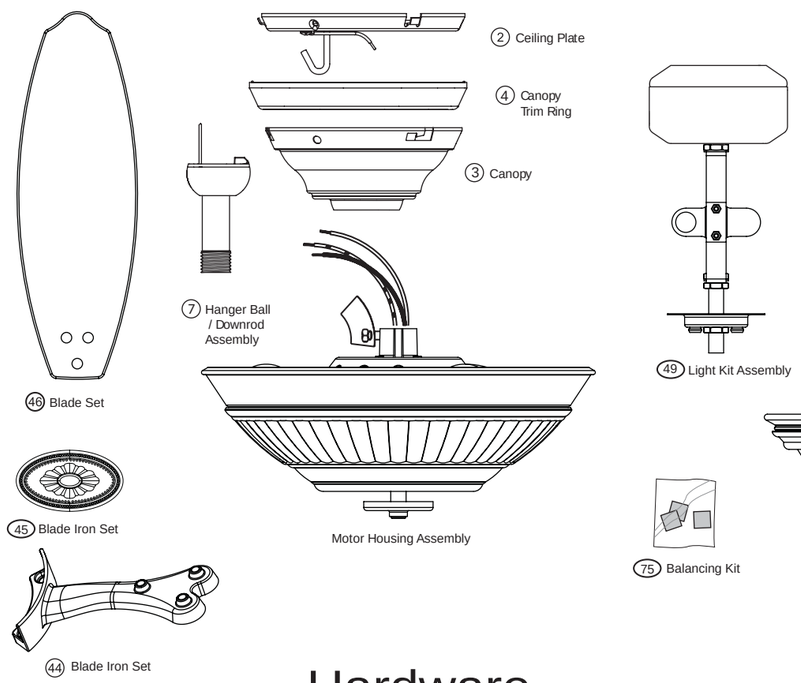

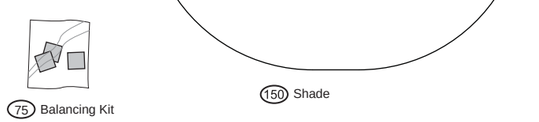

Model Name _____

Catalog No. _____

Serial No. _____

Date Purchased _____

Where Purchased _____

_____

Missing / Broken Parts:
Call 1-888-830-1326

Fan does not work:
1. Reference the Trouble Shooting guide in your Instruction Manual.
2. Call your Local Service Center.
3. Call Technical Support at 901-248-2222.

For additional information on:
Hunter Products • Trouble Shooting
Dealer Location • Service Center Locator
Call 1-800-448-6837
www.hunterfan.com

Hardware (Drawn to Scale)

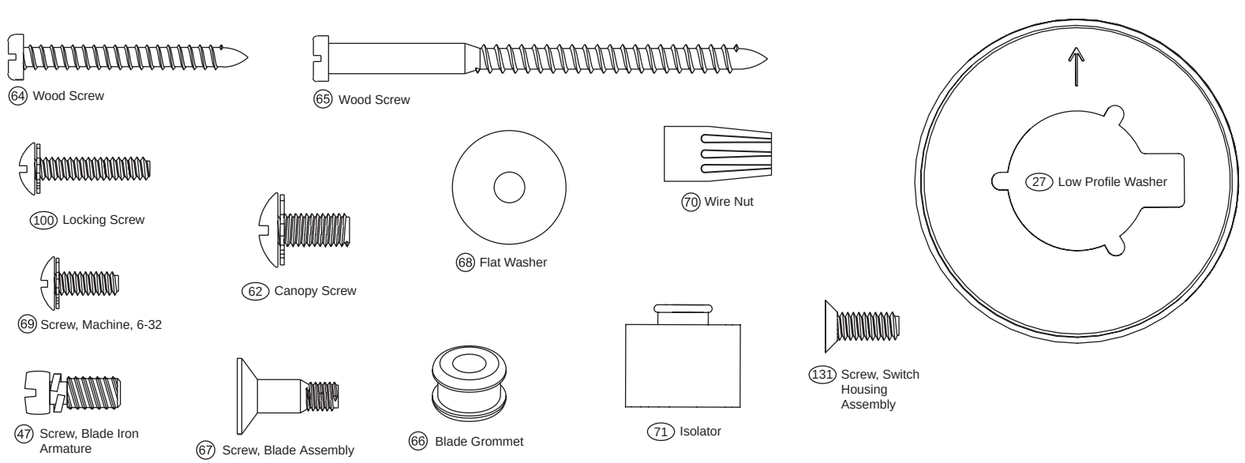

Parts List

		Model #	23802
		Asm. Dwg. #	97169-01
		Finish	Leather Brown/Vieux Gold
Item #	**Item Name**	**Qnty**	**Part #**
	Hanging System Kit	**1**	**97232-03-000**
2	Ceiling Plate	1	----------
3	Canopy	1	----------
4	Canopy Trim Ring	1	----------
7	Hanger Ball / Downrod Assembly	1	----------
8	Set Screw (Not shown)	1	----------
27	Low Profile Washer	1	----------
62	Canopy Screw	4	----------
64	Wood Screw	2	----------
65	Wood Screw	2	----------
68	Flat Washer	4	----------
71	Isolator	4	----------
100	Locking Screw	3	----------
44	**Blade Iron Set**	**1**	**97212-05-000**
45	**Medallions**	**5**	**87412-01-000**
46	**Blade Set**	**1**	**00000-00-000**
47	**Screw, Blade Iron Armature**	**11**	**63755-05-247**
49	**Light Kit Assembly**	**1**	**97211-01-000**
	*** Hardware Kit**	**1**	**97169-01-850**
66	Blade Grommet	16	05989-01-000
67	Screw, Blade Assembly	16	63730-07-247
69	Screw, Machine, 6-32	3	74506-36-247
70	Wire Nut	4	05172-01-000
131	Screw, Switch Housing Assembly	3	64555-02-247
75	**Balancing Kit**	**1**	**07570-01-000**
150	**Glass Globe/Shade**	**1**	**87407-01-000**
151	**Cap**	**1**	**87435-02-000**
152	**Finial**	**1**	**65397-00-000**

Hunter Fan Company
2500 Frisco Avenue
Memphis, TN 38114
www.hunterfan.com

98000-01-670
10/10/06