FF 5000 SERIES

Revolving mixer with separate handshower

Installation guide

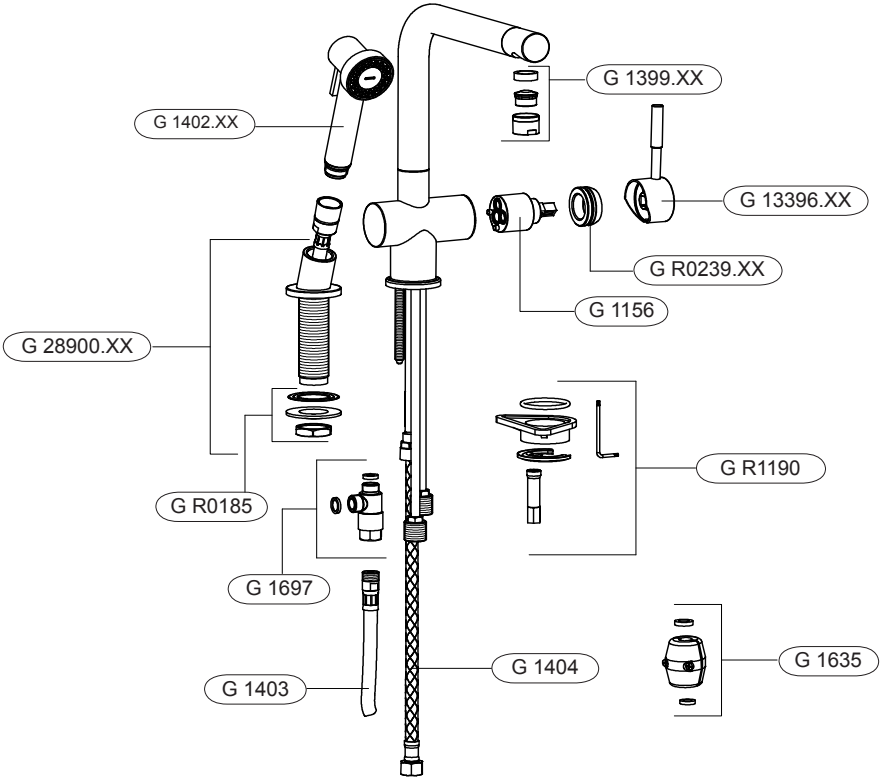

PARTS LIST	
G 1156	Cartridge
G R0239.XX	Ring cap
G 13396.XX	Handle
G 1399.XX	Aerator
G 1402.XX	Side spray
G 28900.XX	Hook for side spray
G R0185	Fastening set (rubber washer, metal washer, nut)
G 1697	Priority water flow system
G 1403	Flexible hose of the side spray
G 1404	Flexible hose
G 1635	Counter weight
G R1190	Fastening set (rubber washer, triangular flange, metal washer, nut, allen key 2,5mm)

TECHNICAL FEATURES
Maximum water flow 2.2 gpm - 60 psi
Recommended pressure range 15-75 psi - Over 75 psi PRV required
Complies with Proposition 65, NSF61, UPC and C-UPC requirements

Faucet installation

Please remove all components from package and inspect prior to installation (see itemized table and picture).

NOTE:

Call us immediately if you see inconsistencies. (1-800-626-5771)
or visit
www.frankeksd.com

TABLE OF CONTENT	
1	Faucet
2	Flexible hose of the side spray
3	Hook for side spray
4	Side spray
5	Priority water flow system
6	Fastening set (rubber washer, metal washer, nut)
7	Fastening set (rubber washer, triangular flange, metal washer, nut, allen key 2,5mm)
8	Counter weight

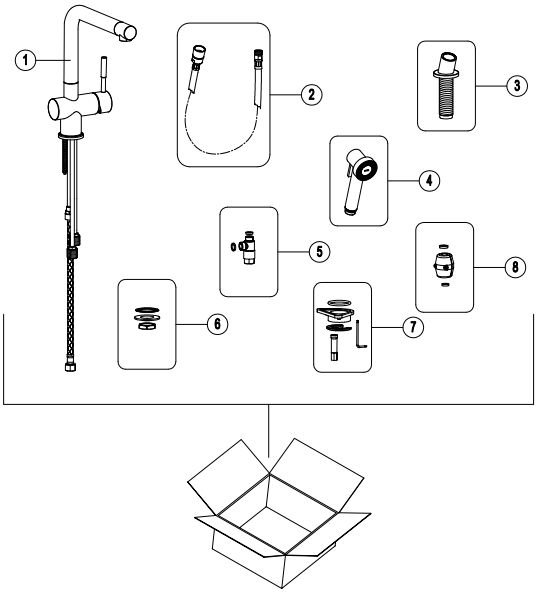

Remove all mounting hardware from protecting plastic bag.

Install faucet to the sink or countertop

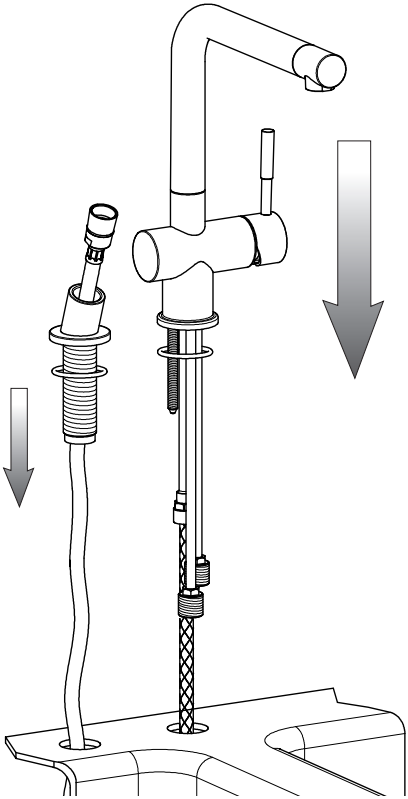

Set the faucet into place on the sink as indicated in the figure.

NOTE:
the rubber O-ring should be sitting on top of the countertop and between the faucet body. DO NOT use putty or other sealant at this location.

Install faucet to the sink or countertop - follows

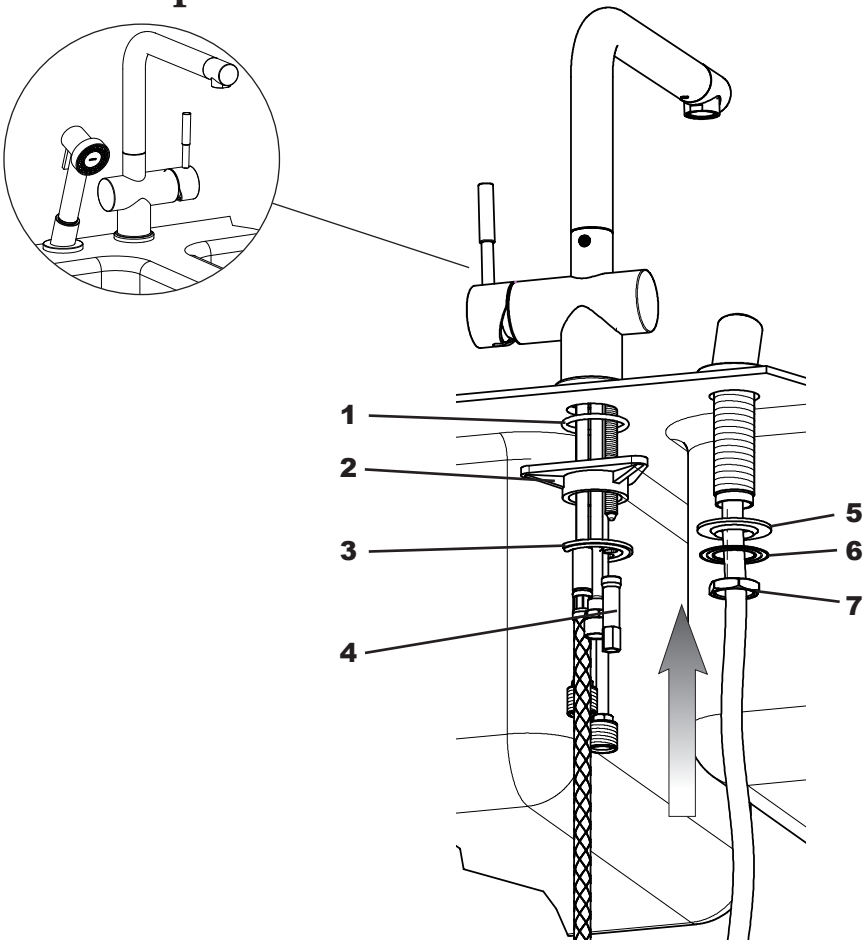

Install the fastening components to the faucet's threaded shank in the following sequence: round gasket (1), triangular flange (2), metal washer (3) and threaded nut (4) (the triangular flange can be omitted if the sink/countertop is too thick). Install the fastening items of the spray head holder in the following sequence: the flat rubber washer (5), the metal washer (6) and the threaded nut (7).

Assembly of side spray and connecting of the priority water flow system

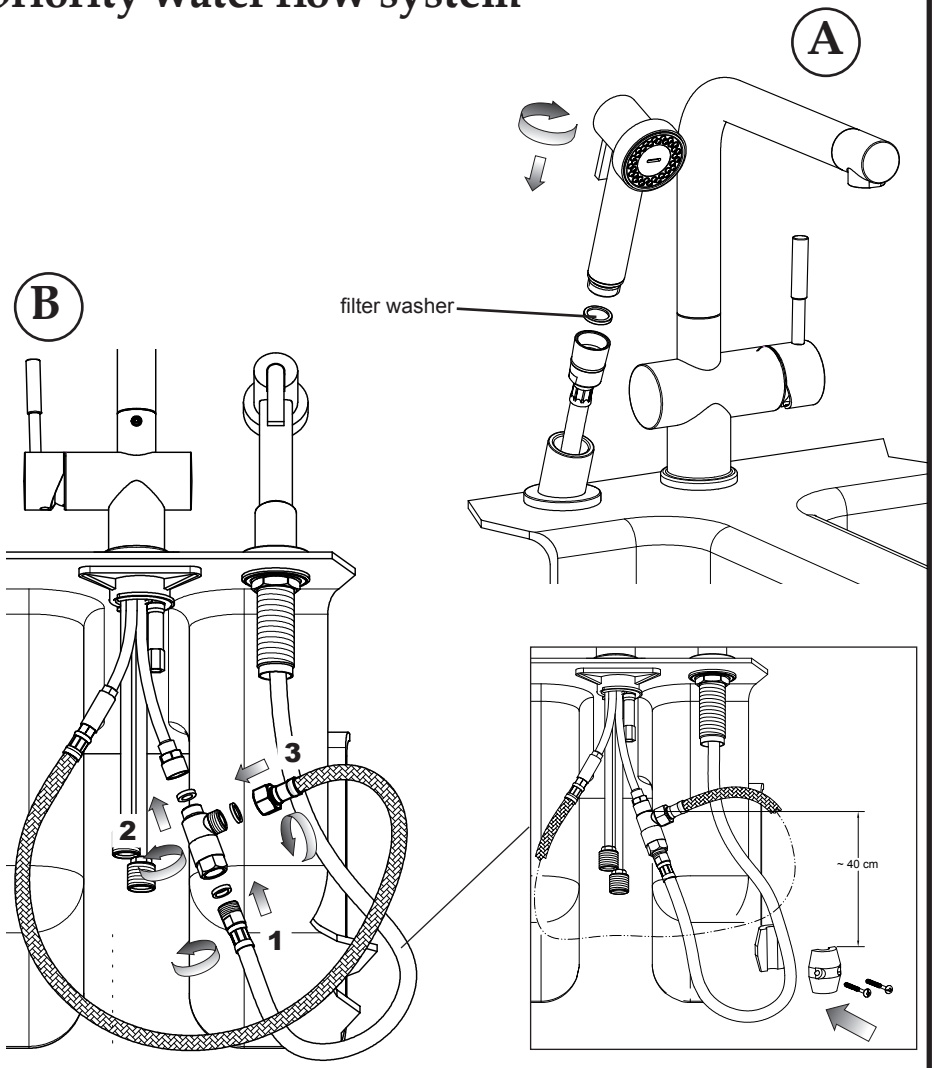

Proceed to the connection of the flexible hose of the side spray (A) and the priority water flow system (B - follow the phases indicated). Interposing the holding gaskets within the connections as indicated in the figure. Fix the lead counter weight to the flexible hose of the side spray at a distance of approx. 40 cm from the connection to the outlet pipe.

Connect the supply lines

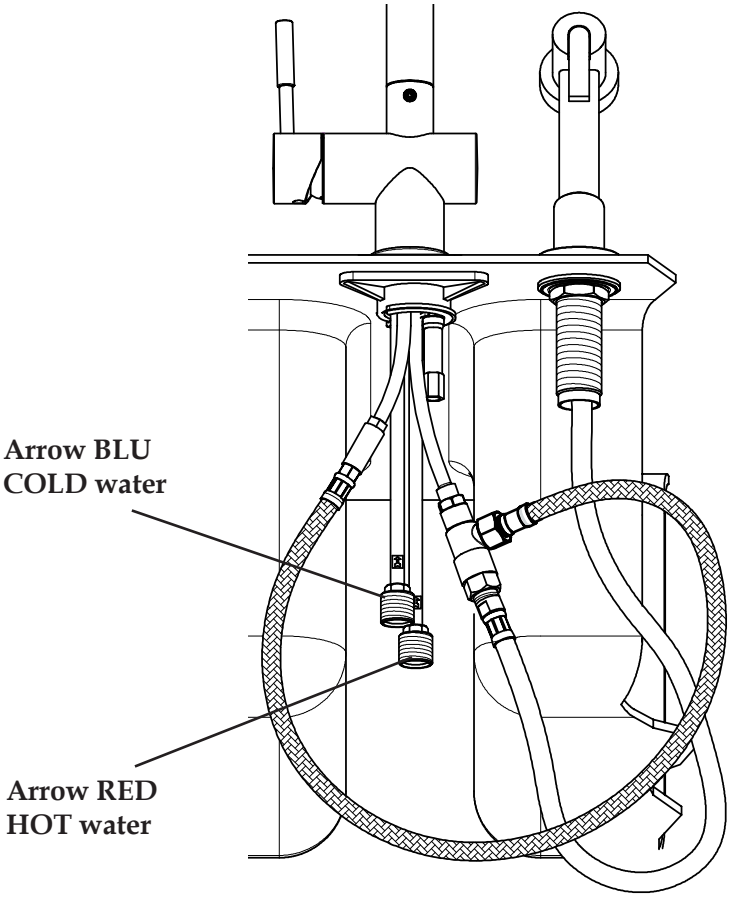

Connect the hot and cold supply lines. Do not allow the supply tubes to twist or bend sharply. Leave the valves closed.

- Move the faucet handle by rotating it onwards so that it opens in the full hot position and open the hot supply for 15 seconds. Close the hot supply.
- Move the faucet handle by rotating it backwards so that it opens in the full cold position and open the cold supply for 15 seconds. Close the cold supply.
- Move the faucet handle to the off position.

Replacing the cartridge

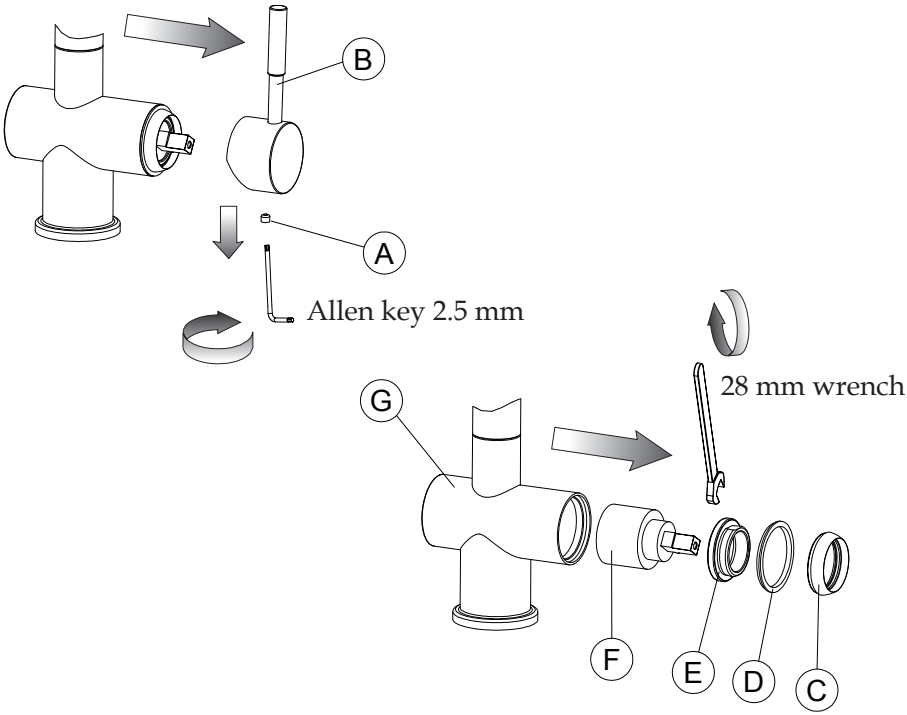

Before starting, shut off the water supply to the faucet and move the faucet handle to the off position. Use a 2.5 mm Allen key to loosen the set screw (A) which is accessible from the back of the handle. Lift the handle (B) from the cartridge (F). Find the small notch at the base of the chrome ring cap and carefully pry up against this to remove the cap (C). Remove the brass retaining ring (E) using a 28 mm wrench. Lift out the cartridge (F). Ensure that the grommets (O-rings) are in good condition and properly seated and remove all mineral deposits. Install the new cartridge so that the central pivots fit into the corresponding seats.

Cleaning of the aerator

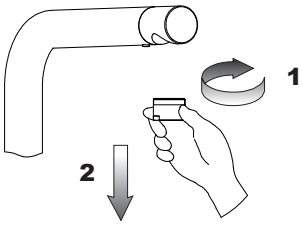

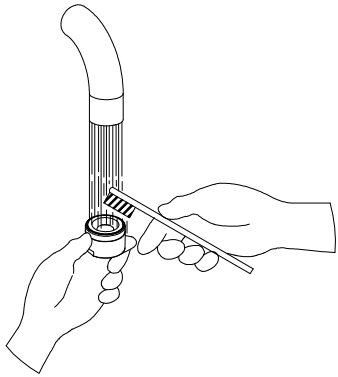

It is recommended that you periodically clean the aerator of your faucet. To do so, unscrew the aerator holder from its own seat. Simply using a toothbrush, or something similar, rub the filter under the water, removing the impurities and any build up. Screw the areator back into place.

Cleaning of the side spray

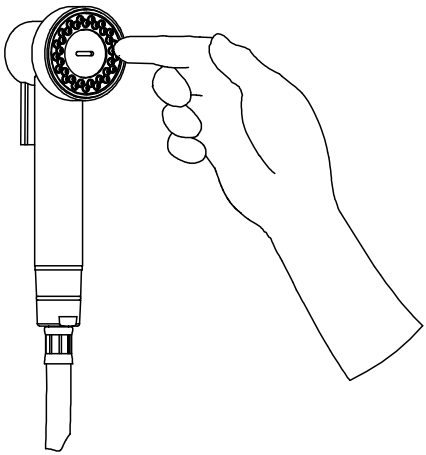

Any deposits which may accumulate on the nozzle can be removed by simply running a finger over the rubber extrusions and then running the water for a few seconds. In extreme cases this step may have to be repeated.

General maintenance

Clean aerator periodically.
Do not use harsh detergents, solvents, chemical agents, metallic sponges, etc. that could harm the surface.
Clean only with a soft sponge and soapy water.
Clean and then dry properly the faucet in case of very hard or calcareous water, whose deposits cold damage the surface.

Limited lifetime warranty

Franke Consumer Products, Inc., Kitchen Systems Division extends the following warranty to the original purchaser of its faucets effective January 1, 2003.

All faucets installed in a private residence will carry a *limited lifetime warranty* on all mechanical parts to be free of manufacturing defects in material and workmanship under normal usage. *All chrome finishes carry a limited lifetime warranty; all other finishes are warranted for five (5) years form the original date of purchase.*

Marine and Outdoor Installation: Franke Consumer Products, Inc. faucets are NOT warranted for Marine and Outdoor installations.

This warranty applies only to the original owner, providing the product has been installed in accordance with our installation instructions, used as recommended and in a normal residential application. **In the event of a warranty claim, the owner will be required to provide proof of purchase - save sales receipt**. This warranty covers all components which make the product operational. Franke, at its option, may repair or replace the product or components necessary to restore the product to good working condition. Franke reserves the right to inspect the installation *prior* to the actual replacement of the product or component part.

This warranty does not cover misuse or abuse, accidental damages, scuffs or scratches, improper installation, abnormal usage, negligence or damage caused by improper maintenance or cleaning. Normal wear of parts is excluded from the warranty. Damage caused by impurities or acts beyond our control are not covered. Any product or part which has been repaired or altered in any manner outside of Franke's factory, unless previously authorized in writing by Franke, will void warranty. ***Any replacement excludes transportation and any labor re-installation costs***. This warranty does not allow recovery of incidental or consequential damages such as loss of use, delay, property damage or other consequential damage, and Franke accepts no liability for such damages.

The Franke warranty is limited to the above conditions and to the warranty period specified herein and is exclusive. Franke DISCLAIMS all other warranties, expressed or implied, including IMPLIED WARRANTIES OF MERCHANTABILITY AND/OR FITNESS FOR AS PARTICULAR PURPOSE. This warranty gives you specific legal rights that may vary from state to state.

Further information
For any further information about our products, about the installation of them or about the guarantee, please dial the number of the customer service:

Phone number +1-215-822-6590
Or: 1-800-626-5771
Fax number + 1-215-822-5873

Franke Consumer Products Inc. - Kitchen Systems Division
3050 Campus Drive, Suite 500 Hatfield, PA 19440