Axor Phoenix Widespread Lav Set

17105XX1

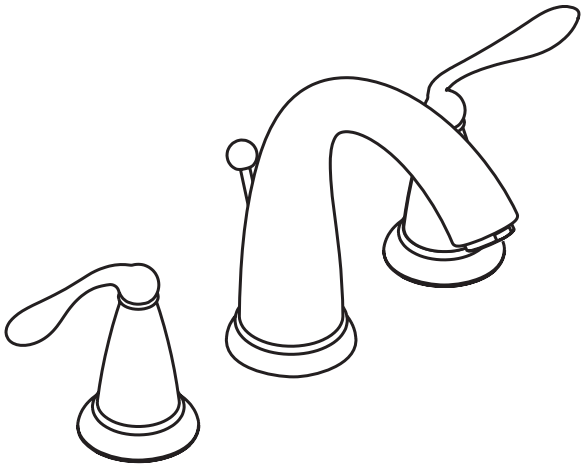

Product Features

- Solid brass
- Lever handles
- 90° Ceramic cartridges
- Flexible connection hoses
- Includes pop-up drain
- 2.2 gpm

Code Compliance

This unit meets or exceeds the following:

- ASME A112.18.1
- CSA B125.1
- Listed by IAPMO

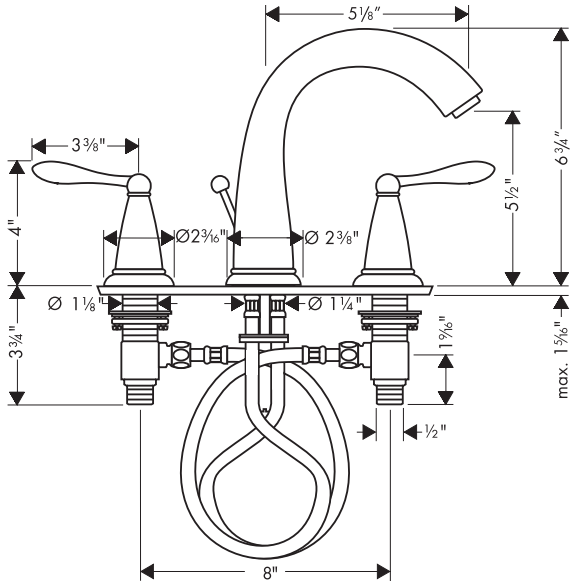

Available Finishes

Chrome	17105001
Oil Rubbed Bronze	17105621
Brushed Nickel	17105821

Installation Notes

- Requires 1/2" supply hoses

The measurements shown are for reference only.

Products and specifications shown are subject to change without notice.

Specification sheet revised 11/2008

AXOR hansgrohe