COMMERCIAL AIR-COOLED CONDENSING UNITS WITH 524A AIR-HANDLING UNITS

Models 566D, 566E, 569D, 569F, 576C with 524A

6 to 20 Tons

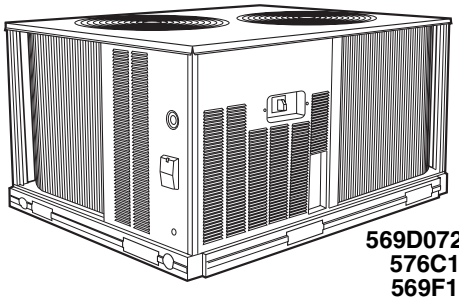

569D072-120
576C120
569F120

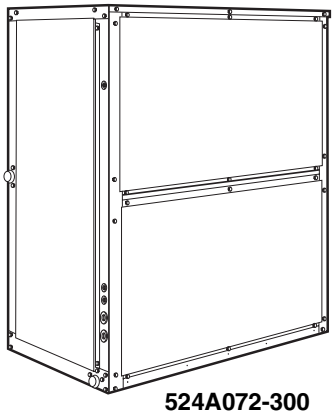

524A072-300

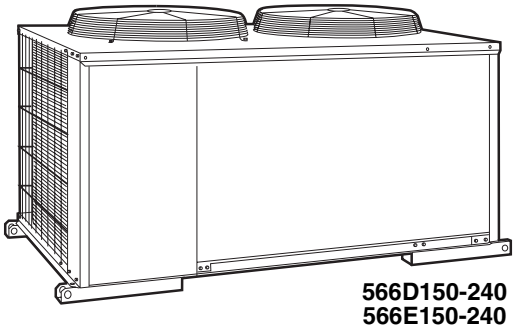

566D150-240
566E150-240

ASHRAE 90.1 COMPLIANT

FEATURES/BENEFITS

These dependable split systems match Bryant's indoor-air handlers and direct-expansion coils with outdoor condensing units for a wide selection of commercial cooling solutions.

CONSTRUCTED FOR LONG LIFE — The 569D (single circuit, scroll compressor), 576C (single circuit semi-hermetic compressor), 569F/566E (dual circuit, scroll compressor) and 566D (semi-hermetic compressor) models are designed and built to last. The copper tube-aluminum fin outdoor coil construction provides years of trouble-free operation. Where conditions require them, E-coated coils and pre-coated fin coils are also available. Cabinets are constructed of prepainted galvanized steel, delivering unparalleled protection from the environment. Inside and outside surfaces are protected to ensure long life, good looks, and reliable operation. Safety controls are used for enhanced system protection and reliability.

EFFICIENT OPERATION — Building owners will appreciate the high unit EERs (Energy Efficiency Ratios) offered by these condensing units. These units provide greater efficiency than similar units in the marketplace, which translates into year-round operating savings.

CONTROLS FOR PERFORMANCE DEPENDABILITY — The condensing units offer the building owner operating controls and components designed for performance dependability. The highly efficient hermetic and semi-hermetic compressors are engineered for long life and durability. The compressors include overload protection and vibration isolation for enhancement of quiet operation. The high-pressure switch protects the entire refrigeration system from abnormally high operating pressures. A low-pressure switch protects the system from low-pressure conditions, including loss of charge.

The 569F120 and 566E150-240 units feature 2 scroll compressors and 2 refrigerant circuits that provide continuous air conditioning and design flexibility. These units also include Cycle-LOC™ anti-short-cycling protection which helps to protect the units against compressor failure.

All units include a crankcase heater to eliminate liquid slugging at start-up. Units with semi-hermetic compressors are also equipped with an oil-level sight glass.

Latest safety standards are assured through UL and UL Canada approvals.

INNOVATIVE BRYANT PACKAGED AIR HANDLERS ARE CUSTOM MATCHED TO THE CONDENSING UNITS — The 524A Series has excellent fan performance, efficient direct-expansion (DX) coils, a unique combination of indoor-air quality features, and easy installation. Its versatility and state-of-the-art features help to ensure that your split system provides economical performance now and in the future.

Indoor-Air Quality (IAQ) Features — The unique combination of IAQ features in the 524A Series air handlers help to ensure that only clean, fresh, conditioned air is delivered to the occupied space.

Direct-expansion (DX) cooling coils prevent the build-up of humidity in the room, even during part-load conditions. Unit sizes of 10 tons and above feature dual-circuit coils for improved temperature control.

Standard 2-in. disposable filters remove dust and airborne particles from the occupied space for cleaner air.

Thermal insulation contains an EPA-registered immobilized anti-microbial agent to inhibit the growth of bacteria and fungi.

The pitched, non-corroding drain pan can be adjusted for a right- or left-hand connection to suit many applications and provide positive drainage and to prevent standing condensate.

The 524A accessory economizer can provide ventilation air to improve indoor air quality by using demand control ventilation. When used in conjunction with a 2 to 10 VDC adapter on the actuator and a CO_2 sensor, the economizer admits fresh outdoor air to replace stale, recirculated indoor air as needed.

Economy — The 524A Series packaged air handlers have low initial costs, and they continue to save money by providing reduced installation expense and energy-efficient performance.

Quick installation is ensured by the multipoise design. Units can be installed in either the horizontal or vertical configuration without modifications. Fan motors and contactors are prewired and thermostatic expansion valves (TXVs) are factory-installed on all 524A direct-expansion models.

High efficiency, precision-balanced fans minimize air turbulence, surging, and unbalanced operation, cutting operation expenses.

The economizer accessory precisely controls the blend of outdoor air and room air to achieve comfort levels. When the outside air enthalpy is suitable, outside air dampers can fully open to provide “free” cooling without energizing mechanical cooling.

Rugged Dependability — The 524A series units are made to last. The die-formed galvanized steel panels ensure structural integrity under all operating conditions. Galvanized steel fan housings are securely mounted to a die-formed galvanized steel fan deck.

Rugged pillow-block bearings (524A150-300) are securely fastened to the solid steel fan shaft with split collets and clamp locking devices. Smaller unit sizes have spider-type bearings.

Coil Flexibility — Model 524A direct-expansion coils have galvanized steel casings; inlet and outlet connections are on the same end. The coils are designed for use with Refrigerant 22 and have $^3/_8$-in. diameter copper tubes mechanically bonded to aluminum sine-wave fins. The coils include matched, factory-installed thermostatic expansion valves (TXVs) with matching distributor nozzles.

Easier Installation and Service — The multipoise design and component layout help you to get the unit installed and running quickly. Units can be converted from horizontal to vertical operation by simply repositioning the unit. Drain pan connections are duplicated on both sides of the unit. The filters, motor, drive, TXVs, and coil connections are all easily accessed by removing a single side panel.

TABLE OF CONTENTS

ARI* CAPACITY RATINGS

CONDENSING UNIT	AIR HANDLER/ INDOOR COIL	SYSTEM†			CONDENSING UNIT ONLY**		
		Net Cap. (Btuh)	EER	IPLV	Gross Cap. (Btuh)	EER	IPLV
569D072	524A-B072†† 524A-C072†† 524A-B090 524A-C090††	69,000 72,000 71,000 74,000	11.0 11.2 10.8 11.0	N/A N/A N/A N/A	72,000	12.4	N/A
569D090	524A-B072 524A-C072†† 524A-B090 524A-C090††	87,000 91,000 90,000 94,000	10.6 11.3 10.6 11.2	N/A N/A N/A N/A	100,000	12.7	N/A
569D120	524A-B120 524A-C120 524A-B150 524A-C150	118,000 125,000 123,000 130,000	10.3 10.4 10.4 10.4	N/A N/A N/A N/A	133,000	12.4	N/A
576C120	524A-B120 524A-C120 524A-B150 524A-C150	114,000 119,000 118,000 125,000	10.3 10.3 10.4 10.3	13.1 13.6 14.1 14.5	124,000	12.0	16.5
569F120	524A-B120 524A-C120 524A-B150 524A-C150	113,000 118,000 118,000 124,000	10.3 10.5 10.5 10.9	11.7 12.4 12.8 13.2	123,000	12.3	16.0
566D150	524A-B150 524A-C150 524A-B180 524A-C180	138,000 144,000 144,000 146,000	10.4 10.6 10.6 10.8	12.7 13.0 11.6 13.1	150,000	12.1	15.8
566E150	524A-B120 524A-C120 524A-B150 524A-C150 524A-B180 524A-C180	135,000 143,000 145,000 153,000 152,000 161,000	9.7 10.2 10.5 11.1 10.8 11.3	9.9 10.3 10.9 11.5 11.0 11.5	158,000	12.5	15.1
566D180	524A-B180 524A-C180 524A-B240 524A-C240	176,000 182,000 184,000 196,000	9.8 9.7 9.8 10.0	12.3 12.1 12.2 12.5	198,000	11	14.9
566E180	524A-B150 524A-C150 524A-B180 524A-C180 524A-B240 524A-C240	176,000 185,000 187,000 198,000 194,000 204,000	10.0 10.3 10.2 10.6 10.1 10.4	10.4 10.8 10.5 10.9 10.2 10.4	204,000	11.9	13.9
566D240	524A-C300	244,000	9.5	11.8	248,000	10.5	13.9
566E240	524A-C240 524A-B300 524A-C300	243,000 242,000 252,000	9.6 9.6 9.7	9.8 9.9 9.9	259,000	11.2	13.1

LEGEND

EER — Energy Efficiency Ratio
IPLV — Integrated Part Load Value
N/A — Not Applicable
SST — Saturated Suction Temperature

*Air Conditioning and Refrigeration Institute.
†Ratings in accordance with latest ARI Standard revisions.
**Condensing unit only ratings are at 45 F SST and 95 F entering-air temperature.
††ENERGY STAR® compliant combination of condensing unit and air handler/ indoor coil.

SOUND LEVELS, dB — 569D/576C/566D,E

UNIT		SOUND RATING (60 Hz) dB (A)	OCTAVE BANDS							
			63	125	250	500	1000	2000	4000	8000
569D	**072**	80.0	43.8	61.4	66.2	70.8	73.8	75.2	73.0	62.7
	090	84.0	58.5	67.3	71.3	75.4	77.2	75.8	76.5	71.3
	120	85.0	63.7	67.6	72.5	77.0	80.4	77.5	74.7	65.9
576C	**120**	83.0	52.5	66.1	75.1	75.4	78.3	73.5	71.0	64.2
566D	**150**	86.2	—	93.0	86.0	83.0	80.0	78.0	73.0	71.0
	180	86.2	—	93.0	86.0	83.0	80.0	78.0	73.0	71.0
	240	90.0	83.5	81.5	88.5	86.5	85.5	82.5	76.5	61.5
566E	**150**	86.9	—	90.9	86.1	83.1	84.0	73.5	71.7	66.7
	180	87.5	—	90.9	86.1	83.4	84.5	76.6	73.2	63.5
	240	88.0	—	90.9	86.1	83.8	84.5	79.2	74.3	65.5

ESTIMATED SOUND POWER LEVELS (Lw) — 524A072-300

UNIT	CFM	dB(A)	OCTAVE BAND CENTER FREQUENCY						
			63	125	250	500	1000	2000	4000
524A072	2,400	86.3	93.2	89.2	85.2	84.2	80.2	78.2	74.2
524A090	3,000	88.3	95.3	91.3	87.3	86.3	82.3	80.3	76.3
524A120	4,000	91.6	98.6	94.6	90.6	89.6	85.6	83.6	79.6
524A150	5,000	91.1	97.3	93.3	89.3	90.3	84.3	82.3	78.3
524A180	6,000	92.7	98.9	94.9	90.9	91.9	85.9	83.9	79.9
524A240	8,000	96.4	102.6	98.6	94.6	95.6	89.6	87.6	83.6
524A300	10,000	96.2	102.5	98.5	94.5	95.5	89.5	87.5	83.5

NOTE: Since this data is calculated, these sound power levels may be different than the actual sound power levels. The accoustic center of the unit is located at geometric center of the unit.

OPTIONS AND ACCESSORIES

566D, 566E, 569D, 569F, 576C FACTORY-INSTALLED OPTIONS

***Dura-Shield* Condenser Coils** offer several options to match coil protection to site conditions for optimum durability. See table below. Consult your Bryant representative for further information.

E-Coated Aluminum-Fin Coils have a flexible and durable epoxy coating uniformly applied to all coil surfaces. Unlike brittle phenolic dip and bake coatings, E-coating provides superior protection with unmatched flexibility, edge coverage, metal adhesion, thermal performance, and most importantly, corrosion resistance.

E-coated coils provide this protection since all coil surfaces are completely encapsulated from environmental contamination. This coating is especially suitable in industrial environments.

Pre-Coated Fin Coils provide protection in mild coastal environments.

–20 F Low-Ambient Temperature Kit Option (Motormaster®) (566E, 569D, 569F, 576C Only) controls outdoor-fan motor operation to maintain the correct head pressure at low outdoor ambient temperatures.

115-v Convenience Outlet (566E, 569D, 569F, 576C Only) to power up electric drills, lights, and refrigerant recovery machines. This means you are no longer required to run a separate 115-v power supply.

Non-Fused Disconnect Switch (566E, 569D, 569F, 576C Only) to remove power locally at the condensing unit. This switch also includes a power lockout capability to protect the service person. This lockout switch saves the service person time and effort because there is no need to access a distant disconnect switch while servicing the unit.

FIELD-INSTALLED ACCESSORIES

Electric Unloader Package (576C120 Only) includes hardware and solenoid valve to convert a pressure-operated unloader to electric unloading.

–20 F Low-Ambient Temperature Accessory Kit (Motormaster) controls outdoor-fan motor operation to maintain the correct head pressure at low outdoor ambient temperatures.

Condenser Coil Grille Package protects condensing unit coil from impact by large objects and vandalism.

Bryant's Line of Thermostats provide both programmable and non-programmable capability with the new **Debonair®** line of commercial programmable thermostats. The **Commercial Electronic** thermostats provide 7-day programmable capability for economical applications.

Hail Guard Package protects against damage from flying debris and hail.

Gage Panel Package provides a suction and discharge pressure gage for the refrigerant circuit.

CONDENSER COIL OPTIONS

COPPER-TUBE COILS WITH *DURA-SHIELD* OPTION	ENVIRONMENT		
	Standard	Mild Coastal	Industrial/ Coastal
Al Fins (Standard Coils)	X		
Al Fins, E-Coated			X
Al Fins, Pre-Coated		X	

LEGEND

Al — Aluminum

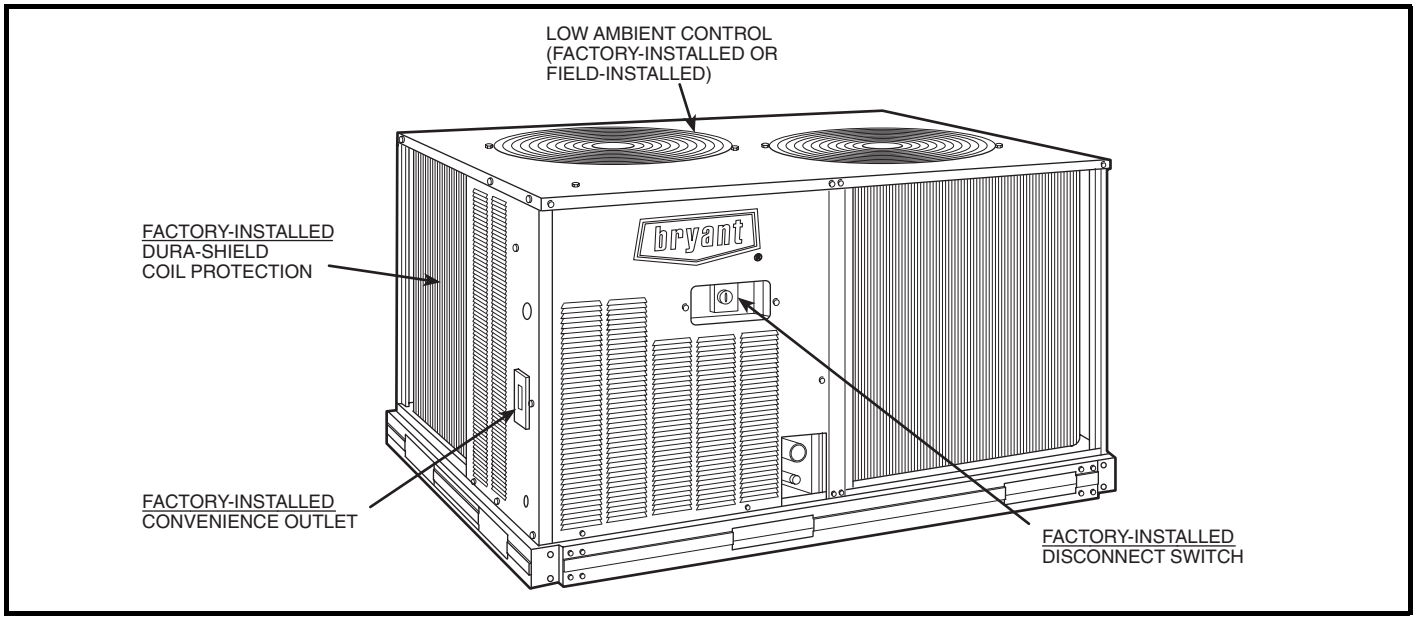

Options and Accessories

524A-B, C FACTORY-INSTALLED OPTIONS

Alternate Fan Motors and Drives are available to provide the widest possible range of performance.

High-Capacity 4-Row Coils are available to provide increased latent and sensible capacities (524A-C).

Prepainted Steel Units are available from the factory for applications that require painted units. Units are painted with American Sterling Gray color.

FIELD-INSTALLED ACCESSORIES

Two-Row Hot Water Coils have copper tubes mechanically bonded to aluminum plate fins and non-ferrous headers.

One-Row Steam Coil has copper tubes and aluminum fins. The Inner Distributing Tube (IDT) design provides uniform temperatures across the coil face. The steam coil has a broad operating pressure range; up to 20 psig (138 kPag) at 260 F (127 C). The IDT steam coils are especially suited to applications where sub-freezing air enters the unit.

Electric Resistance Heat Coils have an open-wire design and are mounted in a rigid frame. Safety cutouts for high temperature conditions are standard. Terminal block for single-point power connection is included.

Economizer (Enthalpy Controlled) provides ventilation air and “free” cooling if outside ambient temperature and humidity are suitable.

Discharge Plenum directs the air discharge directly into the occupied space integral horizontal and vertical louvers enable redirection of airflow. Accessory is available unpainted or painted. Field assembly required.

Return-Air Grille provides a protective barrier over the return-air opening and gives a finished appearance to units installed in the occupied space. Accessory is available unpainted or painted.

Subbase provides a stable, raised platform and room for condensate drain trap connection for vertical floor-mounted units. Accessory is available unpainted or painted.

Overhead Suspension Package includes necessary brackets to support units in horizontal ceiling installations.

Bryant’s Line of Thermostats provide both programmable and non-programmable capability. The **Commercial Electronic** thermostats provide 7-day programmable capability for economical applications.

Condensate Drain Trap includes an overflow shutoff switch that can be wired to turn off the unit if the trap becomes plugged. Kit also includes a wire harness that can be connected to an alarm if desired. The transparent trap is designed for easy service and maintenance.

UV-C Germicidal Lamps kill mold and fungus, which may grow on evaporator coil and condensate pan surfaces. The use of UV-C germicidal lamps eliminates the foul odors that result from this growth of mold and fungus. It also provides a self-cleaning function for the evaporator coil and drain pan.

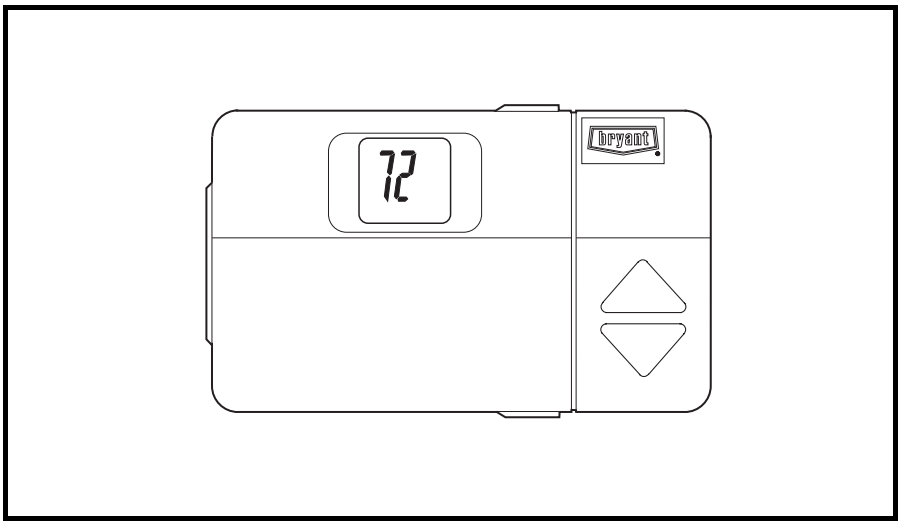

Commercial Programmable and Non-Programmable Thermostat

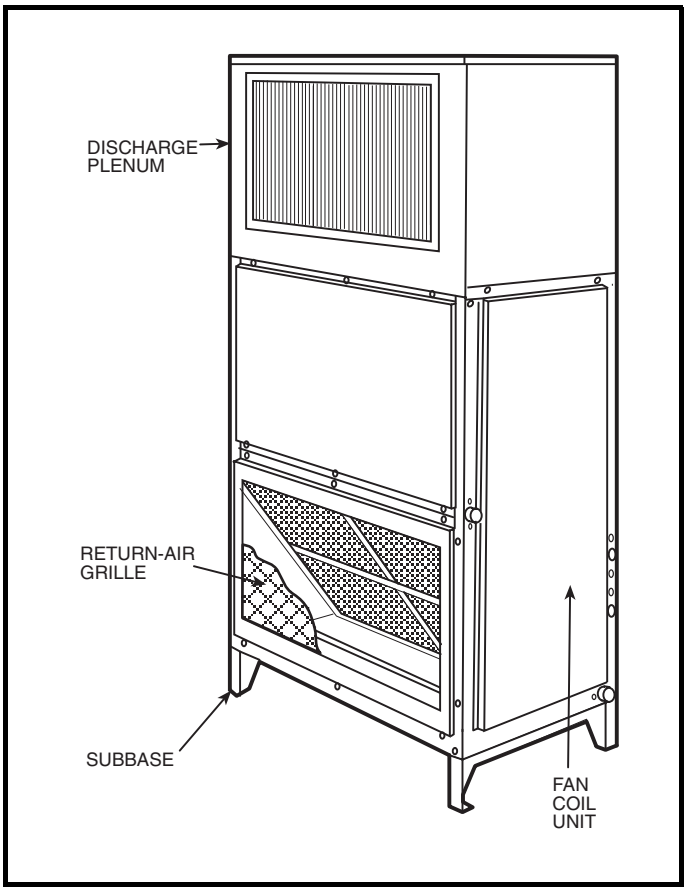

524A with Discharge Plenum, Return Grille, and Subbase

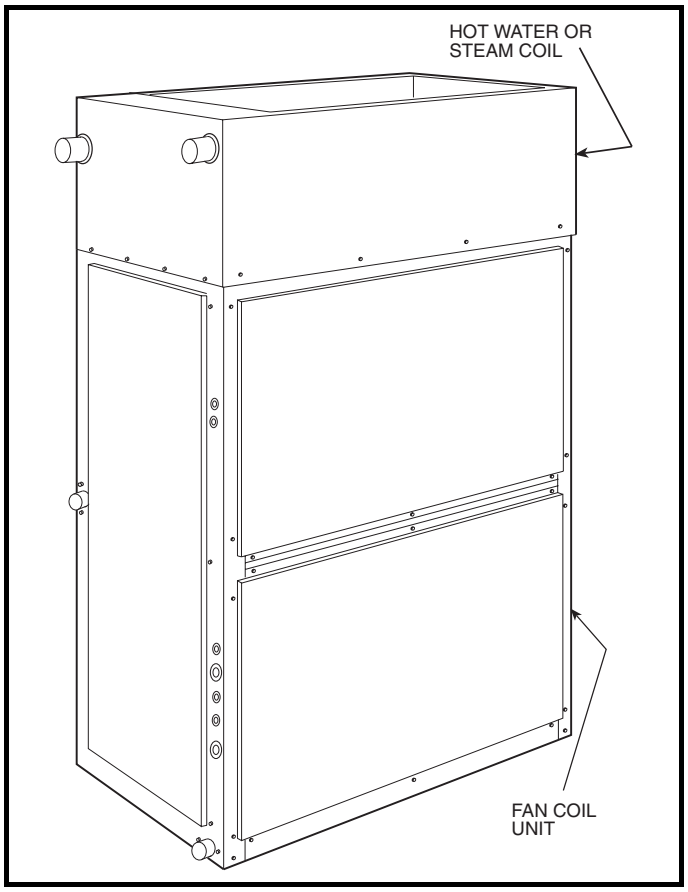

524A with Hot Water or Steam Coil

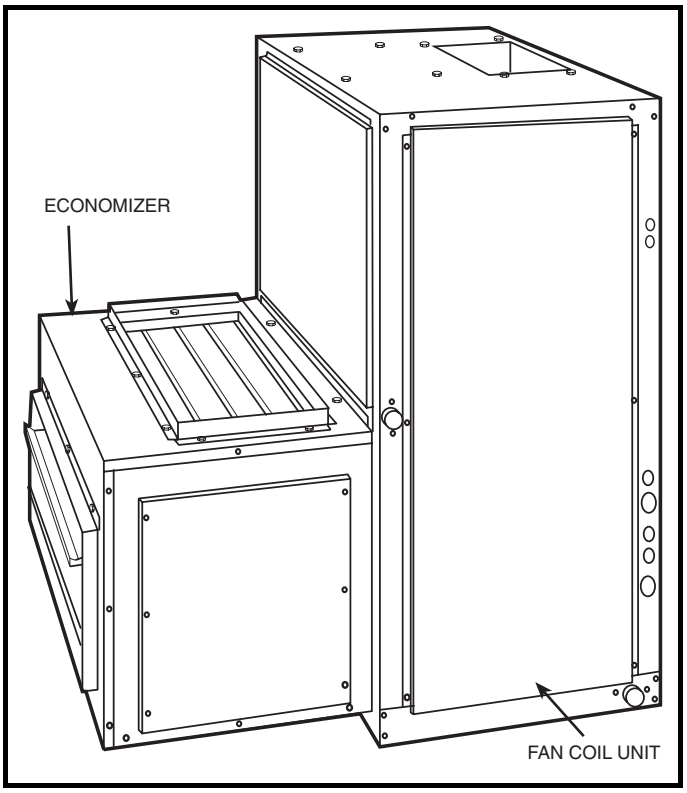

524A with Economizer

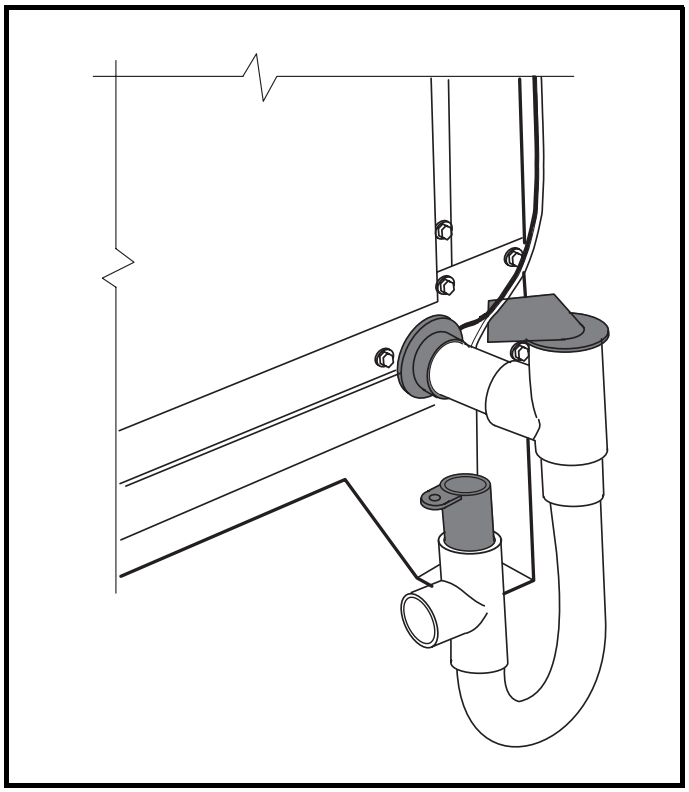

524A with Condensate Trap

SELECTION PROCEDURE

To determine combination ratings for 569D/F, 576C and 566D/E units matched with 524A Series air handlers, follow these steps:

I DETERMINE COOLING LOAD, EVAPORATOR-AIR TEMPERATURE, AND QUANTITY.

Given:

Total Cooling Capacity
Required (TC). . . . . 127,000 Btuh
Sensible Heat Capacity
Required (SHC) . . . . . 95,000 Btuh
Compressor Type . . . . . .Scroll
Temperature Air Entering Condenser (Edb). . . . . 95 F
Temperature Air Entering
Evaporator (db/wb). . . . . .80 F db, 67 F wb
Evaporator Air Quantity . . . . . 4,000 cfm
External Static Pressure . . . . . 0.4 in. wg
Length of Interconnecting
Refrigerant Piping . . . . . .25 ft (Linear)
Power Supply (V-Ph-Hz) 208/230-3-60

II SELECT CONDENSING UNIT AIR-HANDLER COMBINATION.

For this example, select a 569D120 matched with a 524A-C120 with high-capacity 4-row coil This 569D120/524A-C120 condensing unit air-handler combination provides 130,000 Btuh of total cooling capacity and 98,200 Btuh of sensible capacity at the given conditions. If other temperatures or airflow values are required, interpolate the values from the combination ratings.

III DETERMINE SIZES OF LIQUID AND SUCTION LINES.

Enter Refrigerant Piping Sizes table. The sizes shown are based on an equivalent length of pipe. This equivalent length is equal to the linear length of pipe indicated at the top of each sizing column, plus a 50% allowance for fitting losses. (For a more accurate determination of actual equivalent length in place of using the estimated 50% value, refer to a standard refrigeration piping practice.) For this example, note in the linear length column that the proper pipe size is $^1/_2$ in. for the liquid line and $1^3/_8$ in. for the suction line.

IV DETERMINE FAN RPM AND BHP (BRAKE HORSEPOWER).

At the Air Handler Fan Performance table enter at 524A-C120 with high capacity coil at 4000 cfm and move to the External Static Pressure (ESP) column. Note that the conditions require 803 rpm at 1.77 bhp.

V DETERMINE MOTOR AND DRIVE.

Enter the Fan Motor Data tables and find the standard motor for 524A-C120 unit rated at 2.4 Hp. Since the bhp required is 1.77, a standard motor satisfies the requirement and should be used.

Next, find the type of drive that satisfies the 803 rpm requirement in the Drive Data tables. For the 524A-C120 unit, the Standard Drive table on shows an rpm range of 666-863. Since the rpm required is 803, the standard drive satisfies the requirement and should be used. Select the standard motor and standard drive combination (option code GC or ED).

OPERATING SEQUENCES

569D072-120, 576C120 — At start-up, the thermostat calls for cooling. With all safety devices satisfied, the compressor contactor and fan contactor energize, causing the compressor and outdoor-fan motor to operate. Thermostat contacts energize, allowing the field-supplied and field-installed indoor-fan contactor to function. A field-supplied and field-installed liquid line valve also opens, allowing the system to function in Cooling mode. As cooling demand is satisfied, the thermostat contacts break, deenergizing the contactor and causing the system to shut off. The liquid line solenoid valve closes, minimizing the potential for refrigerant migration. The compressor does not restart until the thermostat again calls for cooling. The system is protected with a safety circuit so that the system will not start if a fault exists (i.e., high or low pressure fault). To reset the safety circuit, set the thermostat to eliminate the cooling demand, then return to original set point. This should be done only once, and if system shuts down due to the same fault, determine the problem before attempting to restart the system.

566D150-240 — When the first stage of cooling thermostat closes, the timer starts. After approximately 3 seconds, the timer activates the compressor and fan motor no. 1 contactors. When the liquid pressure builds to approximately 257 psig, fan motor no. 2 is energized.

When there is demand for additional cooling capacity, the second stage of the cooling thermostat closes, energizing a field-supplied liquid line solenoid (LLS) valve, which opens. This increases the suction pressure, causing the compressor to operate at higher capacity (compressor loads).

When the fan switch is set at AUTO, the indoor-air fan cycles with the compressor. When the switch is set at CONT, the indoor-air fan runs continuously.

At shutdown, the Time Guard II timer prevents the compressor from restarting for approximately 5 minutes.

In addition, an LLS valve wired in parallel with the compressor contactor coil shuts off the liquid line to prevent refrigerant migration back to the compressor during the off cycle.

569F120 — When the thermostat calls for stage one cooling at start-up, and all safety devices are satisfied, the compressor contactor no. 1 (C1) energizes causing compressor no. 1 and outdoor-fan motor no. 1 to start (the indoor-fan contactor should be wired to start at the same time as the compressor). The liquid line solenoid (LLS) valve will open when compressor no. 1 starts, allowing refrigerant to flow in the system.

When the thermostat calls for stage two cooling, compressor contactor no. 2 (C2) energizes causing compressor no. 2 and outdoor-fan motor no. 2 to start. As the cooling demand decreases, stage two on the thermostat opens, causing compressor no. 2 and outdoor-fan motor no. 2 to shut down. As the cooling continues to decrease, stage one of the thermostat opens causing compressor no. 1 and outdoor-fan motor no. 1 to shut down. The LLS valve for each compressor will close when the associated compressor stops, minimizing the potential for refrigerant migration during the off cycle.

The indoor-fan motor will stop if the thermostat is set to AUTO and will continue to operate if the thermostat is set to CONT. Each compressor is protected with a Cycle-LOC™ device so that the compressor will not operate if there is a high-pressure fault, low pressure fault, or a compressor is off due to internal line break overcurrent/overtemperature protection. To reset the Cycle-LOC device, set the thermostat higher to remove the cooling demand, then return to the original set point. This should be done only once. If the system shuts down with the same fault, the cause for the fault should be determined and corrected before the a Cycle-LOC device is reset again.

566E150-240 — At start-up, when the thermostat calls for first stage cooling and all safety devices are satisfied, the compressor contactor (C1) energizes causing compressor no. 1 and fan motor no. 1 to start. Fan motor no. 2 will start when the fan cycling pressure switch (FCPS) closes as discharge pressure builds (refer to physical data table for FCPS specifications). With the indoor-fan contactor wired to TB2-4 and TB2-9 contacts on the terminal block, the indoor fan will also start with the compressor. The liquid line solenoid (LLS) valve will open when compressor no. 1 starts, allowing refrigerant to flow in the system.

When the thermostat calls for stage two cooling, compressor contactor no. 2 (C2) energizes causing compressor no. 2 to start. As the cooling demand decreases, stage two on the thermostat opens, causing compressor no. 2 to shut down. As the cooling continues to decrease, stage one of the thermostat opens causing compressor no. 1 and outdoor-fan motor to shut down. The LLS valve for each compressor will close when the associated compressor stops, minimizing the potential for refrigerant migration during the off cycle.

The indoor-fan motor will stop if the thermostat is set to AUTO and will continue to operate if the thermostat is set on CONT. Each compressor is controlled by the thermostat so they will not start until there is a demand from the thermostat. Each compressor is protected with a Cycle-LOC device so that the compressor will not operate if there is a high-pressure fault, low-pressure fault, or compressor is off due to internal line break overcurrent/overtemperature protection. To reset the a Cycle-LOC device, set the thermostat higher to remove the cooling demand, then return to the original set point. This should be done only once. If the system shuts down with the same fault, the cause for the fault should be determined and corrected before the a Cycle-LOC device is reset again.

TYPICAL WIRING SCHEMATICS

NOTES:

1. If any of the original wire furnished must be replaced, it must be replaced with type 90° C wire or its equivalent.
2. Thermostat: HH07AT170, 172, 174 & P272-2783
   Subbase: HH93AZ176, 178 & P272-1882, 1883 or HH93AZ177 & 179.
3. Sealed VA for IFC and LLSV is not to exceed 22.
4. Use copper conductors only.
5. TRAN is wired for 230 v unit. If unit is to be run with 200 v power supply, disconnect BLK wire from 230 v tap and connect to 200 v tap.
6. If TRAN is wired for 460-3-60 v and unit is to be run with 400-3-50 v power supply, disconnect BLK wire from 460 v tap and connect to 400 v tap.
7. Three-phase motors are protected under primary single phasing conditions.

VOLTAGE RATING	CB Mfg. Part No.	MUST TRIP AMPS
24 V	Potter & Brumfield W28X-1024-3.2	3.2

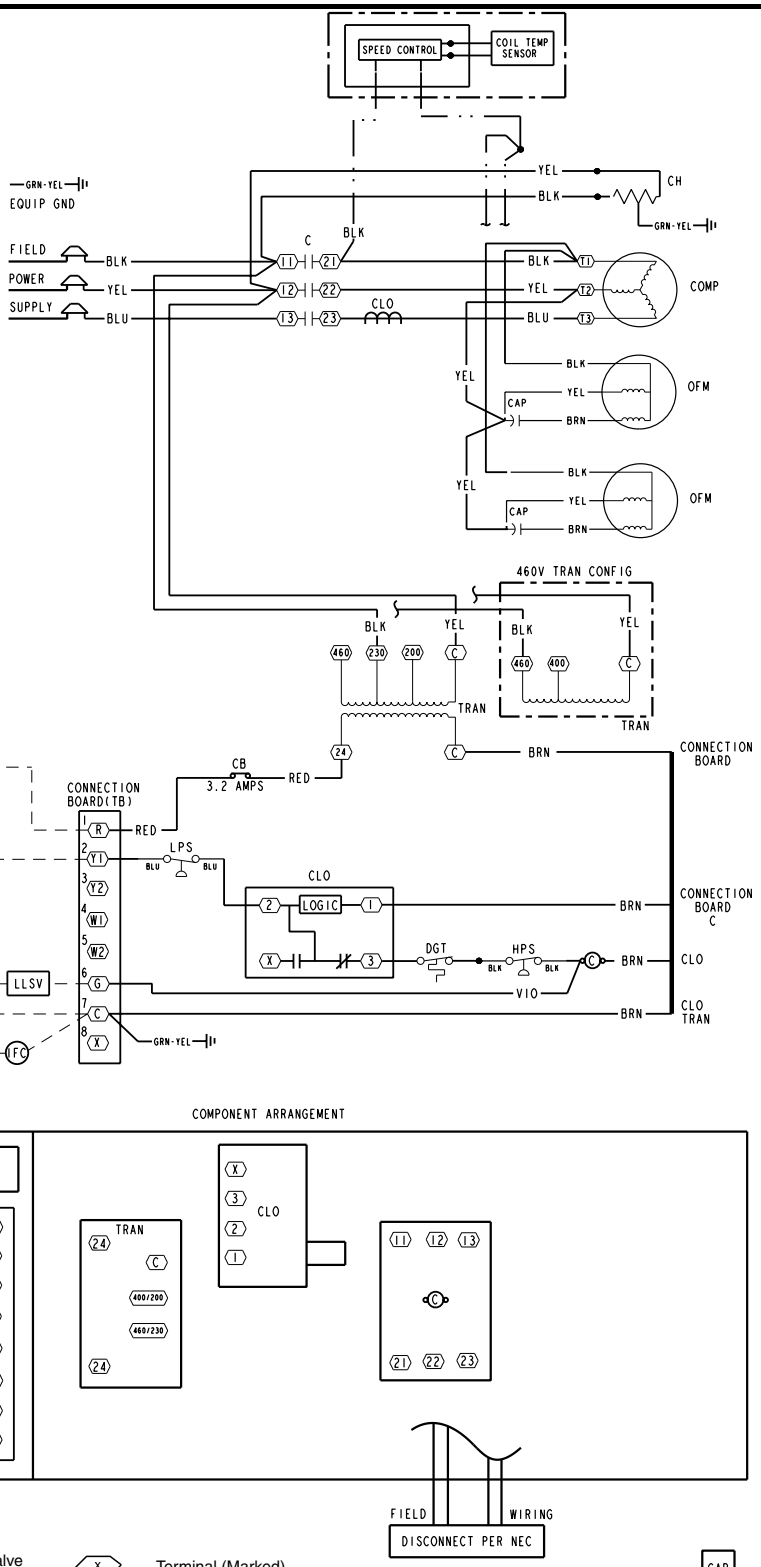

LEGEND

AHA	— Adjustable Heat Anticipator	**LLSV**	— Liquid Line Solenoid Valve		Terminal (Marked)
C	— Contactor, Compressor	**LPS**	— Low-Pressure Switch		Terminal (Unmarked)
CAP	— Capacitor	**NEC**	— National Electrical Code		Terminal Block
CB	— Circuit Breaker	**OFM**	— Outdoor-Fan Motor		Splice
CC	— Cooling Compensator	**QT**	— Quadruple Terminal		Factory Wiring
CH	— Crankcase Heater	**TB**	— Terminal Block		Field Control Wiring
CLO	— Compressor Lockout	**TC**	— Thermostat-Cooling		Field Power Wiring
COMP	— Compressor Motor	**TH**	— Thermostat-Heating		Accessory or Optional Wiring
DGT	— Discharge Gas Thermostat	**TRAN**	— Transformer		To Indicate Common Potential Only, Not Represent Wiring
EQUIP	— Equipment				
GND	— Ground				
HPS	— High-Pressure Switch		Field Splice		
IFC	— Indoor-Fan Contactor		Marked Wire		

569D090, 208/230-3-360 and 460-3-60 Units

NOTES:

1. IF ANY OF THE ORIGINAL WIRE FURNISHED MUST BE REPLACED, IT MUST BE REPLACED WITH TYPE 90°C WIRE OR ITS EQUIVALENT.
2. THERMOSTAT: HH07AT170,172,174 & P272-2783 SUBBASE: HH93AZ176,178 & P272-1882,1883 OR: HH93AZ177 & 179
3. SEALED VA FOR IFC & LLSV IS NOT TO EXCEED 22.
4. USE COPPER CONDUCTORS ONLY.
5. UNIT IS WIRED FOR 230V UNIT. IF UNIT IS TO BE RUN WITH 200V POWER SUPPLY DISCONNECT BLK WIRE FROM 230V TAP AND CONNECT TO 200V TAP.
6. IF TRAN IS WIRED FOR 460-3-60V & UNIT IS TO BE RUN WITH 400-3-50V POWER SUPPLY DISCONNECT BLK WIRE FROM 460V TAP AND CONNECT TO 400V TAP.
7. THREE PHASE MOTORS ARE PROTECTED UNDER PRIMARY SINGLE PHASING CONDITIONS.

VOLTAGE RATING	CB MFG. PART NO.	MUST TRIP AMPS
	POTTER & BRUMFIELD	
24V	W28X-1024-3.2	3.2

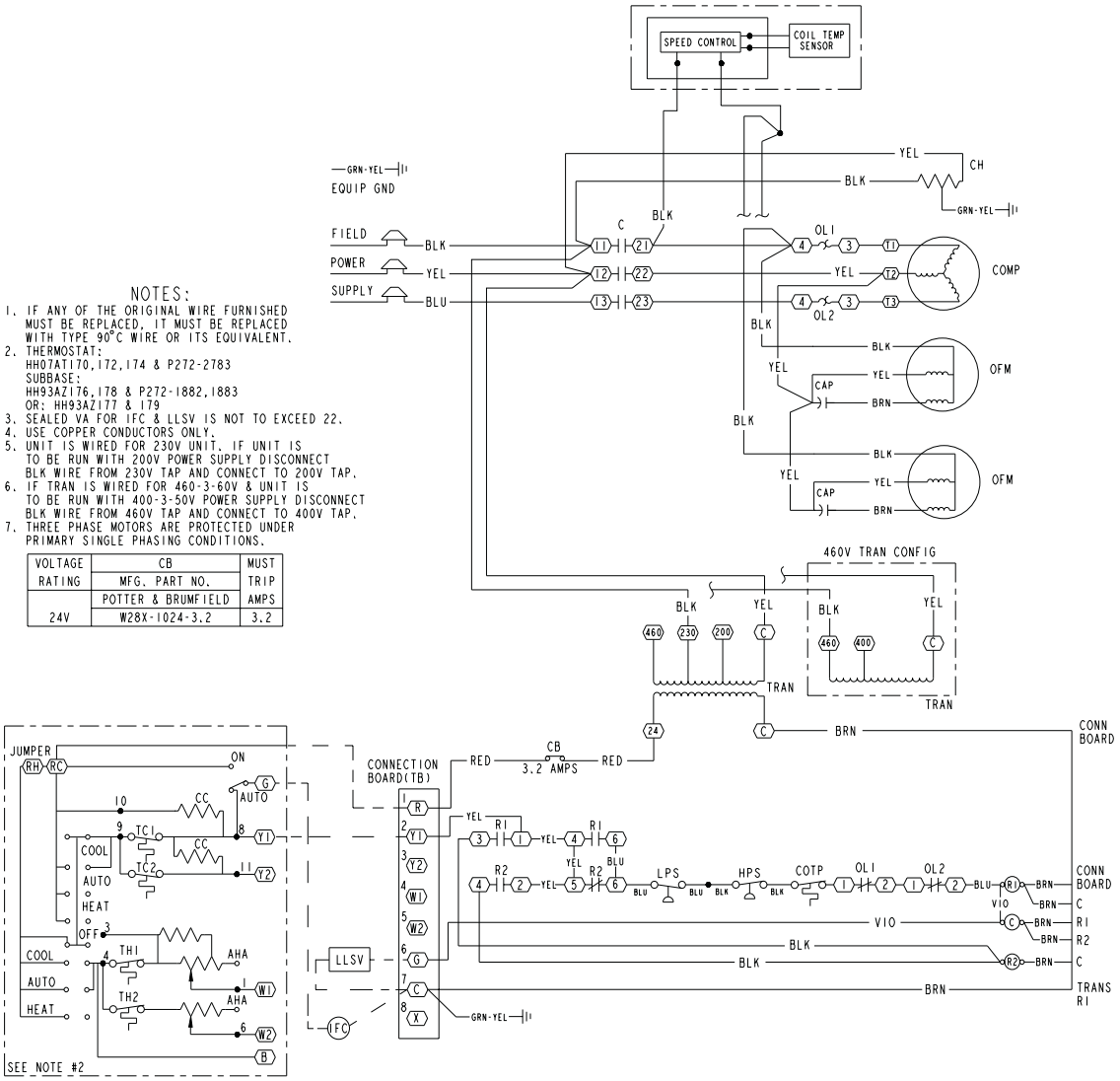

LEGEND

AHA	—	Adjustable Heat Anticipator
C	—	Contactor, Compressor
CAP	—	Capacitor
CB	—	Circuit Breaker
CC	—	Cooling Compensator
CH	—	Crankcase Heater
COMP	—	Compressor Motor
COTP	—	Compressor Over Temperature Protection
EQUIP	—	Equipment
GND	—	Ground
HPS	—	High-Pressure Switch
IFC	—	Indoor-Fan Contactor
LLSV	—	Liquid Line Solenoid Valve
LPS	—	Low-Pressure Switch
NEC	—	National Electrical Code
OFM	—	Outdoor-Fan Motor
OL	—	Overload Relay
R	—	Relay
TB	—	Terminal Block
TC	—	Thermostat-Cooling
TH	—	Thermostat-Heating
TRAN	—	Transformer

Field Splice

Marked Wire

Terminal (Marked)

Terminal (Unmarked)

Terminal Block

Splice

Factory Wiring

Field Control Wiring

Field Power Wiring

Accessory or Optional Wiring

To Indicates Common Potential Only, Not Represent Wiring

COMPONENT ARRANGEMENT

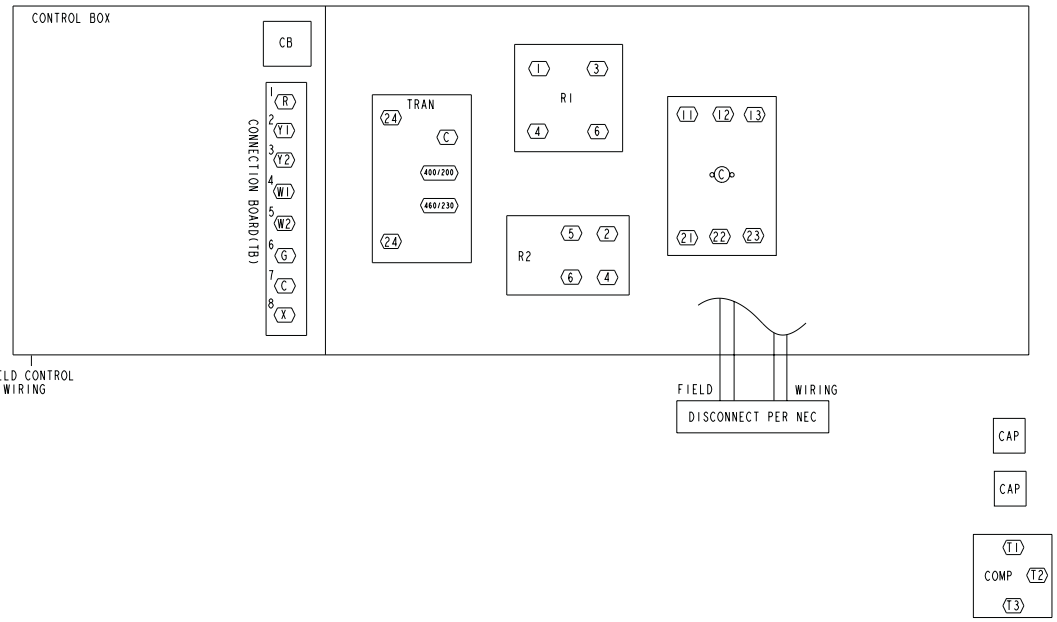

576C120, 208/230-3-60 and 460-3-60 Units

MODEL NUMBER NOMENCLATURE

569D P X 072 000 – –

569D — Commercial Air-Cooled Condensing Unit With Scroll Compressor
569F — Dual Circuit Commercial Air-Cooled Condensing Unit With Scroll Compressor

Voltage Designation
E — 460-3-60
P — 208/230-3-60
T — 575-3-60

Heating
X — None

Nominal Tons Cooling
072 — 6 (569D Only)
090 — 7-1/2 (569D Only)
120 — 10 (569D, 569F)

Factory-Installed Options*

Heating Capacity
000 — No Heat

576C P X 120 000 – –

576C — Commercial Air-Cooled Condensing Unit With Semi-Hermetic Compressor

Voltage Designation
E — 460-3-60
P — 208/230-3-60
T — 575-3-60

Heating
X — None

Factory-Installed Options*

Heating Capacity
000 — No Heat

Nominal Tons Cooling
120 — 10

*Contact your local representative for more details.

Quality Assurance

Certified to ISO 9001:2000

PHYSICAL DATA

569D072-120, 576C120, 569F120 UNITS

UNIT	569D072	569D090	569D120	576C120	569F120
NOMINAL CAPACITY (tons)	6	7 1/2	10	10	10
OPERATING WEIGHT (lb)					
Aluminum Coils (Standard)	300	383	430	575	488
Copper Coils (Optional)	352	484	531	676	589
REFRIGERANT TYPE*			R-22		
Operating Charge, Typical (lb)†	12	20	22	24	11/Circuit
Shipping Charge (lb)	2.0	2.0	2.0	2.0	2.0
COMPRESSOR					
Type		Scroll		Reciprocating	Scroll
Qty...Model	1...SR_68	1...SR_94	1...ZR125	1...06DH824	2...SR_60
Oil Charge (oz)	88	90	110	128	72 (ea)
No. Cylinders		N/A		6	N/A
Speed (rpm)		3500		1750	3500
CONDENSER FAN					
Qty...Rpm	2...850	2...1100	2...1100	2...1100	2...1100
Motor HP (rpm)	1/8	1/4	1/4	1/4	1/4
Diameter	22	22		22	22
Nominal Airflow (Cfm Total)	5400	6500		6500	6500
Watts (Total)	340	570		570	570
CONDENSER COIL (Qty)					
Face Area (sq ft total)		29.2		29.2	29.2
Rows...Fins/in.	1...17	2...17	2...17	2...17	2...17
Storage Capacity (lb)**	17.3	34.2	34.2	34.2	17.1 (ea)
CONTROLS					
Pressurestat Settings (psig)					
High Cutout		428 ± 10		428 ± 10	428 ± 10
Cut-in		320 ± 20		320 ± 20	320 ± 20
Low Cutout		27 ± 3		27 ± 3	27 ± 3
Cut-in		44 ± 5		44 ± 5	44 ± 5
DISCHARGE GAS THERMOSTAT (°F)					
Cutout	—	270 ± 9	—	—	—
Cut-in	—	190 ± 13	—	—	—
PRESSURE RELIEF					
Location			Suction Line		
Temperature (F)			200		
PIPING CONNECTIONS (in. ODM)					
Qty...Suction	1...1 1/8	1...1 1/8	1...1 3/8	1...1 3/8	2...1 1/8
Qty...Liquid	1...3/8	1...3/8	1...1/2	1...1/2	2...3/8

*Unit is factory-supplied with holding charge only.
†Typical operating charge with 25 ft of interconnecting piping.
**Storage capacity of condenser coil with coil 80% full of liquid R-22 at 95 F.

NOTE: Unit 576C120 has one step of unloading. Full load is at 100% of capacity, and one step of unloading is 67% capacity. Unit 576C120 has the following unloader settings: load is 70 ± 1 psig and unload is 60 ± 2 psig.

DIMENSIONS

UNIT	ALUMINUM COIL											
	Standard Unit Weight		Corner W		Corner X		Corner Y		Corner Z		Center of Gravity	
	lb	kg	lb	kg	lb	kg	lb	kg	lb	kg	X mm [in.]	Y mm [in.]
569D072	300	136	62	28	103	47	62	28	72	33	831.9 [32.75]	641.4 [25.25]
569D090	383	174	86	39	123	56	85	39	89	40	822.3 [32.38]	635.0 [25.00]
569D120	430	195	84	38	166	75	66	30	114	52	812.8 [32.00]	676.3 [26.63]
576C120	575	261	55	25	265	120	88	40	167	76	927.1 [36.50]	647.7 [25.50]

UNIT	ELECTRICAL CHARACTERISTICS
569D072	208/230-3-60, 460-3-60, 575-3-60
569D090	208/230-3-60, 460-3-60, 575-3-60
569D120	208/230-3-60, 460-3-60, 575-3-60
576C120	208/230-3-60, 460-3-60, 575-3-60

SERVICE VALVE CONNECTIONS		
Unit	Suction mm [in.]	Liquid mm [in.]
569D072	28.6 [1 1/8]	9.5 [3/8]
569D090	28.6 [1 1/8]	9.5 [3/8]
569D120	34.9 [1 3/8]	12.7 [1/2]
576C120	34.9 [1 3/8]	12.7 [1/2]

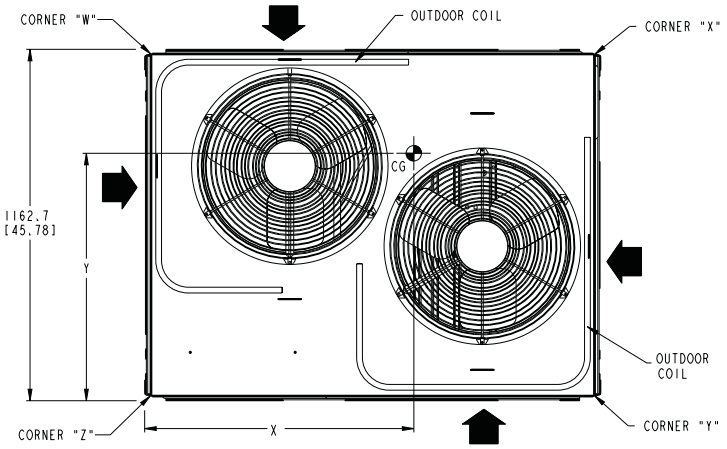

TOP VIEW

NOTES:
1. MINIMUM CLEARANCE (LOCAL CODES OR JURISDICTION MAY PREVAIL):
   A. BOTTOM TO COMBUSTIBLE SURFACES: 0 INCHES.
   B. OUTDOOR COIL, FOR PROPER AIR FLOW: 36 INCHES ONE SIDE, 12 INCHES THE OTHER. THE SIDE GETTING THE GREATER CLEARANCE IS OPTIONAL.
   C. OVERHEAD: 60 INCHES, TO ASSURE PROPER OUTDOOR FAN OPERATION.
   D. BETWEEN UNITS: CONTROL BOX SIDE, 42 INCHES PER NEC.
   E. BETWEEN UNIT AND UNGROUNDED SURFACES: CONTROL BOX SIDE, 36 INCHES PER NEC.
   F. BETWEEN UNIT AND BLOCK OR CONCRETE WALLS AND OTHER GROUNDED SURFACES: CONTROL BOX SIDE, 42 INCHES PER NEC.
2. WITH EXCEPTION OF THE CLEARANCE FOR THE OUTDOOR COIL AS STATED IN NOTE 1B, A REMOVABLE FENCE OR BARRICADE REQUIRES NO CLEARANCE.
3. UNITS MAY BE INSTALLED ON COMBUSTIBLE FLOORS MADE FROM WOOD OR CLASS A, B OR C ROOF COVERING MATERIAL.

CG CENTER OF GRAVITY

DIRECTION OF AIR FLOW

DIMENSIONS IN [ ] ARE IN INCHES

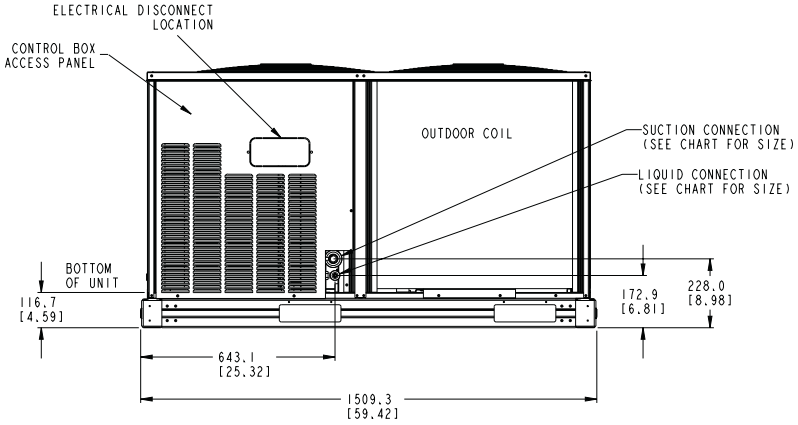

FRONT VIEW

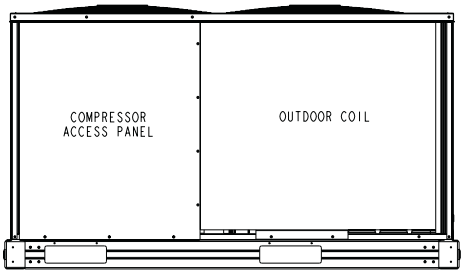

REAR VIEW

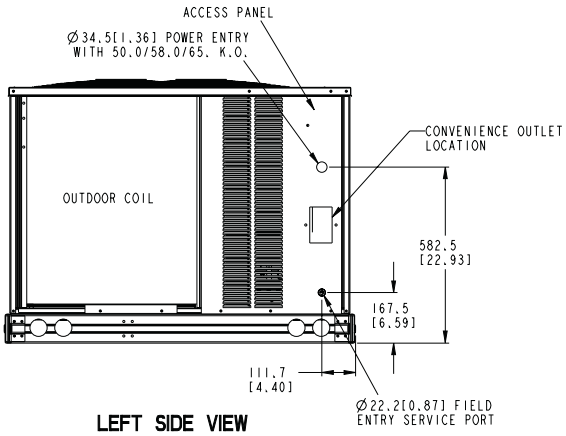

LEFT SIDE VIEW

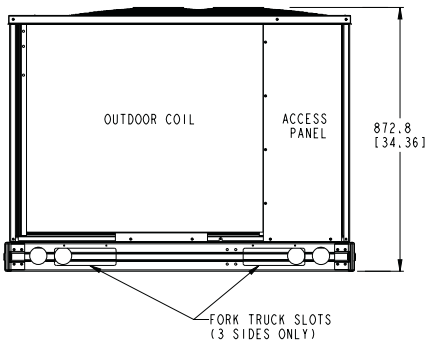

RIGHT SIDE VIEW

569D072-120, 576C120

DIMENSIONS (cont)

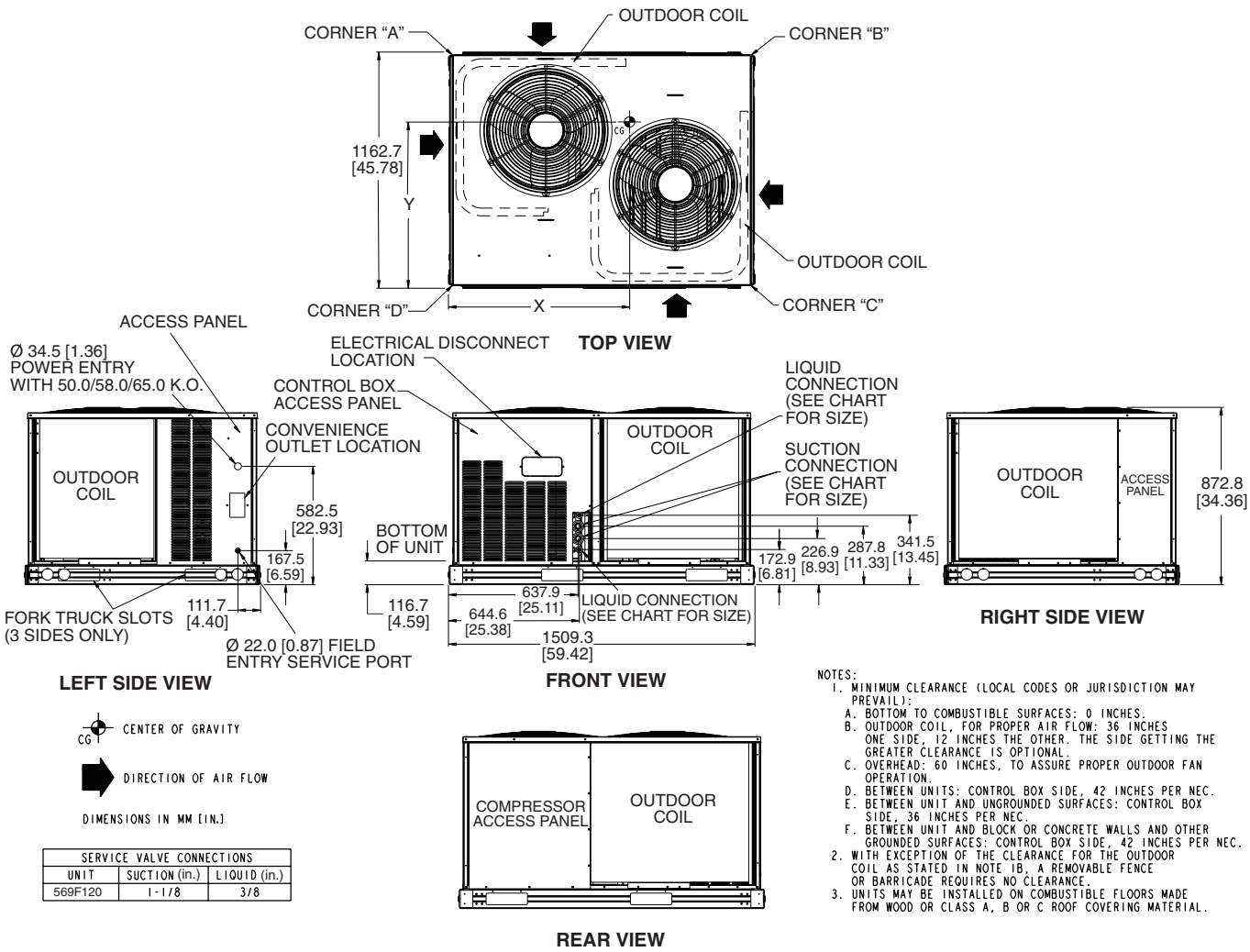

SERVICE VALVE CONNECTIONS		
UNIT	SUCTION (in.)	LIQUID (in.)
569F120	1-1/8	3/8

UNIT	ELECTRICAL CHARACTERISTICS	ALUMINUM COIL											
		Std. Unit Wt.		Corner A		Corner B		Corner C		Corner D		Center of Gravity	
		lb	kg	lb	kg	lb	kg	lb	kg	lb	kg	X mm [in.]	Y mm [in.]
569F120	208/230-3-60, 400/460-3-50/60, 575-3-60	488	221	102	46	143	65	139	63	104	47	873.8 [34.4]	591.8 [23.3]

569F120

PERFORMANCE DATA

CONDENSING UNIT RATINGS

569D072

SST (F)		Air Temperature Entering Condenser (F)					
		80	85	95	100	105	115
25	TC	53.6	52.3	49.4	48.0	46.5	43.6
	kW	4.24	4.49	5.02	5.31	5.60	6.24
	SDT	101.0	106.0	115.0	120.0	125.0	135.0
30	TC	59.1	57.6	54.6	53.0	51.5	48.3
	kW	4.33	4.57	5.10	5.39	5.69	6.33
	SDT	102.0	107.0	117.0	122.0	126.0	136.0
35	TC	64.9	63.3	60.1	58.4	56.7	53.4
	kW	4.42	4.67	5.20	5.49	5.79	6.43
	SDT	104.0	109.0	118.0	123.0	128.0	138.0
40	TC	71.0	69.3	65.8	64.1	62.3	58.7
	kW	4.53	4.77	5.31	5.60	5.90	6.55
	SDT	106.0	110.0	120.0	125.0	129.0	139.0
45	TC	77.4	75.6	71.9	70.1	68.2	64.3
	kW	4.65	4.89	5.43	5.72	6.02	6.68
	SDT	107.0	112.0	122.0	126.0	131.0	141.0
50	TC	84.2	82.3	78.4	76.4	74.3	70.2
	kW	4.78	5.03	5.56	5.86	6.16	6.81
	SDT	109.0	114.0	123.0	128.0	133.0	142.0

569D090

SST (F)		Air Temperature Entering Condenser (F)					
		80	85	95	100	105	115
25	TC	73.9	71.7	67.0	64.6	62.1	57.0
	kW	5.81	6.14	6.84	7.21	7.58	8.36
	SDT	98.6	104.0	114.0	118.0	123.0	133.0
30	TC	82.0	79.7	74.9	72.4	69.9	64.7
	kW	5.88	6.21	6.90	7.28	7.65	8.46
	SDT	99.6	104.0	114.0	119.0	124.0	134.0
35	TC	90.4	88.0	83.0	80.4	77.8	72.4
	kW	5.98	6.31	7.02	7.40	7.78	8.59
	SDT	101.0	106.0	115.0	120.0	125.0	135.0
40	TC	99.2	96.7	91.4	88.7	85.9	80.3
	kW	6.09	6.43	7.14	7.53	7.92	8.74
	SDT	103.0	107.0	117.0	122.0	126.0	136.0
45	TC	109.0	106.0	100.0	97.4	94.5	88.6
	kW	6.22	6.56	7.28	7.68	8.07	8.91
	SDT	104.0	109.0	119.0	123.0	128.0	138.0
50	TC	118.0	116.0	110.0	107.0	104.0	97.2
	kW	6.36	6.70	7.43	7.83	8.23	9.09
	SDT	106.0	111.0	120.0	125.0	130.0	139.0

569D120

SST (F)		Air Temperature Entering Condenser (F)					
		80	85	95	100	105	115
25	TC	102.0	99.3	93.8	90.9	88.1	81.9
	kW	8.04	8.38	9.13	9.55	9.95	10.85
	SDT	101.0	106.0	116.0	121.0	126.0	136.0
30	TC	112.0	109.0	103.0	99.8	96.7	90.3
	kW	8.26	8.60	9.31	9.65	10.05	10.95
	SDT	103.0	107.0	117.0	12.02	127.0	136.0
35	TC	122.0	119.0	113.0	109.0	106.0	99.0
	kW	8.52	8.85	9.55	9.95	10.35	11.15
	SDT	104.0	109.0	118.0	123.0	128.0	137.0
40	TC	133.0	130.0	123.0	119.0	115.0	108.0
	kW	8.81	9.15	9.85	10.25	10.55	11.35
	SDT	106.0	110.0	120.0	125.0	129.0	139.0
45	TC	144.0	141.0	133.0	130.0	126.0	118.0
	kW	9.12	9.45	10.15	10.55	10.85	11.65
	SDT	108.0	112.0	122.0	126.0	131.0	140.0
50	TC	156.0	152.0	145.0	141.0	137.0	128.0
	kW	9.45	9.85	10.55	10.85	11.25	12.05
	SDT	109.0	114.0	123.0	128.0	133.0	142.0

576C120

SST (F)		Air Temperature Entering Condenser (F)					
		80	85	95	100	105	115
25	TC	89.0	85.1	77.4	73.6	69.7	62.2
	kW	7.52	7.79	8.29	8.49	8.70	9.02
	SDT	103.0	108.0	118.0	123.0	128.0	138.0
30	TC	101.0	96.6	88.5	84.4	80.3	72.2
	kW	7.76	8.07	8.64	8.89	9.14	9.55
	SDT	104.0	108.0	118.0	123.0	128.0	138.0
35	TC	113.0	109.0	100.0	95.8	91.5	83.0
	kW	8.01	8.36	8.99	9.28	9.55	10.05
	SDT	105.0	109.0	119.0	124.0	128.0	138.0
40	TC	125.0	121.0	112.0	107.0	103.0	94.1
	kW	8.29	8.66	9.35	9.65	9.95	10.55
	SDT	106.0	111.0	120.0	125.0	129.0	139.0
45	TC	138.0	133.0	124.0	119.0	115.0	106.0
	kW	8.57	8.97	9.75	10.05	10.50	11.05
	SDT	108.0	113.0	122.0	127.0	131.0	140.0
50	TC	152.0	147.0	137.0	132.0	127.0	117.0
	kW	8.85	9.28	10.15	10.45	10.90	11.55
	SDT	111.0	115.0	124.0	129.0	133.0	142.0

569F120

SST (F)		Air Temperature Entering Condenser (F)					
		80	85	95	100	105	115
25	TC	90.5	87.9	82.6	79.8	76.9	71.1
	kW	7.75	8.17	9.05	9.52	10.00	11.00
	SDT	100.0	105.0	115.0	120.0	125.0	135.0
30	TC	100.0	97.8	92.2	89.3	86.3	80.2
	kW	7.79	8.21	9.09	9.57	10.10	11.10
	SDT	101.0	106.0	116.0	120.0	125.0	135.0
35	TC	111.0	108.0	102.0	99.0	96.0	89.7
	kW	7.89	8.30	9.18	9.66	10.10	11.20
	SDT	102.0	107.0	116.0	121.0	126.0	136.0
40	TC	122.0	119.0	112.0	109.0	106.0	99.4
	kW	8.01	8.42	9.31	9.79	10.30	11.30
	SDT	104.0	108.0	118.0	123.0	127.0	137.0
45	TC	133.0	130.0	123.0	120.0	116.0	109.0
	kW	8.15	8.57	9.46	9.95	10.40	11.50
	SDT	105.0	110.0	120.0	124.0	129.0	138.0
50	TC	145.0	141.0	134.0	131.0	127.0	120.0
	kW	8.30	8.72	9.63	10.10	10.60	11.70
	SDT	107.0	112.0	121.0	126.0	131.0	140.0

LEGEND

kW — Compressor Power
SDT — Saturated Discharge Temperature at Compressor (F)
SST — Saturated Suction Temperature (F)
TC — Gross Cooling Capacity (1000 Btuh)

PERFORMANCE DATA (cont)

COMBINATION RATINGS*

UNIT 569D072

569D072/524A-C072 WITH HIGH-CAPACITY 4-ROW COIL

Temp (F) Air Entering Condenser (Edb)		Evaporator Air — Cfm											
		1800				2400				3000			
		Evaporator Air — Ewb (F)											
		57	62	67	72	57	62	67	72	57	62	67	72
80	TC	66.0	68.6	74.3	80.7	72.0	72.6	77.7	84.1	76.2	76.2	79.9	86.2
	SHC	66.0	60.9	51.0	40.8	72.0	70.5	58.6	45.5	76.2	76.2	65.7	50.0
	kW	4.45	4.49	4.60	4.71	4.55	4.57	4.66	4.78	4.63	4.63	4.70	4.82
85	TC	65.1	67.5	73.1	79.3	71.0	71.4	76.3	82.6	75.0	75.1	78.5	84.6
	SHC	65.1	60.3	50.5	40.3	71.0	69.8	58.1	45.0	75.0	75.1	65.2	49.5
	kW	4.72	4.76	4.87	4.99	4.83	4.84	4.93	5.05	4.91	4.90	4.97	5.09
95	TC	63.3	65.2	70.6	76.7	68.9	69.1	73.6	79.7	72.8	72.8	75.7	81.6
	SHC	63.3	59.2	49.4	39.3	68.9	68.3	57.0	44.0	72.8	72.8	64.0	48.5
	kW	5.26	5.30	5.41	5.53	5.37	5.38	5.47	5.60	5.45	5.45	5.51	5.64
100	TC	62.3	64.0	69.2	75.2	67.7	67.9	72.2	78.2	71.5	71.5	74.2	80.0
	SHC	62.3	58.6	48.9	38.8	67.7	67.4	56.5	43.5	71.5	71.5	63.4	47.9
	kW	5.57	5.61	5.71	5.84	5.68	5.68	5.78	5.90	5.76	5.76	5.82	5.95
105	TC	61.3	62.8	67.9	73.8	66.6	66.7	70.7	76.6	70.3	70.3	72.7	78.4
	SHC	61.3	58.0	48.3	38.2	66.6	66.6	55.9	42.9	70.3	70.3	62.8	47.4
	kW	5.88	5.91	6.02	6.15	5.99	5.99	6.08	6.21	6.07	6.08	6.12	6.26
115	TC	59.3	60.5	65.2	70.9	64.4	64.3	67.8	73.5	67.9	67.9	69.7	75.2
	SHC	59.3	56.8	47.2	37.2	64.4	64.3	54.8	41.9	67.9	67.9	61.6	46.4
	kW	6.51	6.53	6.63	6.77	6.61	6.61	6.70	6.83	6.69	6.70	6.74	6.88

569D072/524A-B072 WITH STANDARD 3-ROW COIL

Temp (F) Air Entering Condenser (Edb)		Evaporator Air — Cfm											
		1800				2400				3000			
		Evaporator Air — Ewb (F)											
		57	62	67	72	57	62	67	72	57	62	67	72
80	TC	63.4	66.1	71.7	77.8	69.0	69.8	74.9	81.1	72.9	72.9	76.9	83.1
	SHC	63.4	58.4	49.0	39.2	69.0	67.2	56.0	43.6	72.9	72.9	62.5	47.6
	kW	4.40	4.45	4.55	4.66	4.50	4.52	4.60	4.72	4.57	4.57	4.64	4.76
85	TC	62.5	65.1	70.5	76.6	68.0	68.7	73.6	79.7	71.9	71.9	75.6	81.7
	SHC	62.5	57.9	48.5	38.8	68.0	66.6	55.5	43.1	71.9	71.9	62.0	47.2
	kW	4.67	4.72	4.82	4.93	4.77	4.79	4.88	4.99	4.84	4.84	4.91	5.03
95	TC	60.8	62.9	68.2	74.1	66.1	66.5	71.1	77.0	69.7	69.8	73.1	78.9
	SHC	60.8	56.8	47.5	37.9	66.1	65.2	54.6	42.2	69.7	69.8	60.9	46.2
	kW	5.22	5.26	5.36	5.48	5.32	5.33	5.42	5.54	5.39	5.39	5.46	5.58
100	TC	59.9	61.8	67.0	72.8	65.1	65.4	69.8	75.6	68.6	68.6	71.7	77.4
	SHC	59.9	56.3	47.0	37.4	65.1	64.4	54.0	41.7	68.6	68.6	60.4	45.7
	kW	5.53	5.56	5.67	5.79	5.63	5.63	5.73	5.85	5.70	5.70	5.76	5.89
105	TC	59.0	60.7	65.7	71.4	64.0	64.2	68.5	74.1	67.5	67.5	70.3	75.9
	SHC	59.0	55.7	46.5	36.9	64.0	63.7	53.5	41.2	67.5	67.5	59.8	45.2
	kW	5.84	5.87	5.98	6.10	5.94	5.94	6.03	6.16	6.01	6.01	6.07	6.20
115	TC	57.1	58.4	63.3	68.7	61.9	61.9	65.8	71.3	65.2	65.2	67.4	72.9
	SHC	57.1	54.6	45.5	35.9	61.9	61.9	52.4	40.2	65.2	65.2	58.7	44.2
	kW	6.46	6.48	6.59	6.72	6.57	6.56	6.65	6.78	6.64	6.63	6.68	6.82

LEGEND

Edb — Entering Dry Bulb
Ewb — Entering Wet Bulb
kW — Compressor Motor Power Input
SHC — Sensible Heat Capacity (1000 Btuh) Gross
TC — Total Capacity (1000 Btuh) Gross

*Combinations on this page are ENERGY STAR® compliant.

PERFORMANCE DATA (cont)

COMBINATION RATINGS (cont)

UNIT 569D072 (cont)

569D072/524A-C090 WITH HIGH-CAPACITY 4-ROW COIL*

Temp (F) Air Entering Condenser (Edb)		Evaporator Air — Cfm											
		2400				3000				3750			
		Evaporator Air — Ewb (F)											
		57	62	67	72	57	62	67	72	57	62	67	72
80	TC	71.9	72.9	78.3	84.8	77.7	77.7	81.3	87.6	81.6	81.6	83.4	89.4
	SHC	71.9	69.5	57.7	45.1	77.7	77.7	67.0	50.9	81.6	81.6	75.2	56.4
	kW	4.55	4.57	4.67	4.79	4.66	4.66	4.73	4.85	4.73	4.73	4.77	4.89
85	TC	70.9	71.7	76.9	83.3	76.5	76.5	79.8	86.1	80.3	80.3	81.9	87.8
	SHC	70.9	68.8	57.2	44.6	76.5	76.5	66.4	50.3	80.3	80.3	74.6	55.9
	kW	4.83	4.84	4.94	5.07	4.93	4.93	5.00	5.12	5.01	5.01	5.04	5.16
95	TC	68.8	69.3	74.2	80.4	74.1	74.1	76.9	82.9	77.7	77.8	79.0	84.5
	SHC	68.8	67.5	56.1	43.5	74.1	74.1	65.2	49.3	77.7	77.8	73.3	54.8
	kW	5.37	5.38	5.48	5.61	5.48	5.48	5.54	5.66	5.55	5.56	5.58	5.70
100	TC	67.7	68.0	72.8	78.8	72.8	72.9	75.4	81.3	76.4	76.4	77.4	82.8
	SHC	67.7	66.8	55.5	43.0	72.8	72.9	64.6	48.8	76.4	76.4	72.5	54.3
	kW	5.68	5.69	5.79	5.92	5.79	5.79	5.85	5.97	5.87	5.87	5.89	6.01
105	TC	66.5	66.8	71.3	77.3	71.6	71.6	73.9	79.6	75.0	75.0	75.9	81.1
	SHC	66.5	66.0	54.9	42.5	71.6	71.6	64.0	48.2	75.0	75.0	71.8	53.7
	kW	5.99	6.00	6.09	6.23	6.10	6.10	6.15	6.28	6.18	6.18	6.20	6.32
115	TC	64.3	64.3	68.4	74.2	69.0	69.1	70.8	76.2	72.3	72.3	72.7	77.7
	SHC	64.3	64.3	53.8	41.4	69.0	69.1	62.8	47.1	72.3	72.3	70.3	52.6
	kW	6.61	6.61	6.71	6.85	6.73	6.73	6.77	6.90	6.81	6.8	6.81	6.94

569D072/524A-B090 WITH STANDARD 3-ROW COIL

Temp (F) Air Entering Condenser (Edb)		Evaporator Air — Cfm											
		2400				3000				3750			
		Evaporator Air — Ewb (F)											
		57	62	67	72	57	62	67	72	57	62	67	72
80	TC	68.4	69.5	74.8	81.0	73.6	73.6	77.6	83.8	77.3	77.3	79.5	85.5
	SHC	68.4	65.8	54.8	42.9	73.6	73.6	63.1	48.1	77.3	77.3	70.4	52.9
	kW	4.49	4.51	4.61	4.72	4.58	4.58	4.65	4.77	4.65	4.65	4.69	4.81
85	TC	67.4	68.4	73.6	79.7	72.6	72.6	76.3	82.4	76.1	76.1	78.2	84.0
	SHC	67.4	65.2	54.3	42.4	72.6	72.6	62.6	47.6	76.1	76.1	69.8	52.4
	kW	4.76	4.78	4.88	5.00	4.86	4.86	4.93	5.05	4.92	4.92	4.96	5.08
95	TC	65.5	66.2	71.1	77.1	70.4	70.5	73.7	79.5	73.8	73.8	75.5	81.1
	SHC	65.5	64.0	53.3	41.5	70.4	70.5	61.5	46.6	73.8	73.8	68.7	51.4
	kW	5.31	5.32	5.42	5.54	5.40	5.40	5.47	5.59	5.47	5.47	5.51	5.62
100	TC	64.5	65.1	69.7	75.6	69.3	69.3	72.3	78.0	72.6	72.6	74.0	79.5
	SHC	64.5	63.3	52.8	41.0	69.3	69.3	60.9	46.1	72.6	72.6	68.0	50.9
	kW	5.62	5.63	5.72	5.85	5.71	5.72	5.78	5.90	5.78	5.78	5.82	5.93
105	TC	63.4	63.9	68.4	74.1	68.1	68.1	70.9	76.5	71.4	71.4	72.6	77.9
	SHC	63.4	62.5	52.2	40.5	68.1	68.1	60.4	45.6	71.4	71.4	67.3	50.4
	kW	5.93	5.94	6.03	6.16	6.03	6.03	6.08	6.21	6.10	6.10	6.12	6.24
115	TC	61.4	61.6	65.8	71.2	65.9	65.8	68.0	73.4	68.9	68.9	69.7	74.8
	SHC	61.4	61.1	51.2	39.4	65.9	65.8	59.2	44.6	68.9	68.9	66.0	49.4
	kW	6.55	6.55	6.64	6.78	6.65	6.65	6.70	6.83	6.72	6.73	6.74	6.86

LEGEND

Edb — Entering Dry Bulb
Ewb — Entering Wet Bulb
kW — Compressor Motor Power Input
SHC — Sensible Heat Capacity (1000 Btuh) Gross
TC — Total Capacity (1000 Btuh) Gross

*This combination is ENERGY STAR® compliant.

PERFORMANCE DATA (cont)

COMBINATION RATINGS (cont)

UNIT 569D090

569D090/524A-C072 WITH HIGH-CAPACITY 4-ROW COIL*

Temp (F) Air Entering Condenser (Edb)		Evaporator Air — Cfm											
		1800				2400				3000			
		Evaporator Air — Ewb (F)											
		57	62	67	72	57	62	67	72	57	62	67	72
80	TC	78.9	85.1	92.8	101.0	87.0	90.7	98.3	106.0	93.0	94.7	102.0	110.0
	SHC	77.9	69.0	59.0	48.7	87.0	79.9	66.9	53.6	93.0	89.3	74.2	58.0
	kW	5.75	5.78	5.85	5.94	5.79	5.83	5.91	6.01	5.85	5.87	5.96	6.06
85	TC	77.6	83.6	91.3	99.3	85.7	89.2	96.6	105.0	91.6	93.1	100.0	108.0
	SHC	77.0	68.3	58.3	48.0	85.7	79.1	66.3	52.9	91.6	88.4	73.5	57.4
	kW	6.10	6.13	6.20	6.30	6.14	6.18	6.26	6.37	6.20	6.22	6.31	6.41
95	TC	75.1	80.8	88.3	96.1	83.2	86.1	93.3	101.0	88.9	89.9	96.5	104.0
	SHC	75.1	66.8	56.9	46.7	83.2	77.6	64.9	51.6	88.9	86.7	72.2	56.1
	kW	6.80	6.82	6.90	7.00	6.85	6.87	6.96	7.08	6.91	6.92	7.01	7.12
100	TC	73.9	79.2	86.6	94.4	81.8	84.4	91.4	99.2	87.4	88.2	94.5	102.0
	SHC	73.8	66.0	56.2	46.1	81.8	76.7	64.1	50.9	87.4	85.7	71.4	55.3
	kW	7.20	7.21	7.29	7.40	7.24	7.26	7.36	7.47	7.30	7.31	7.40	7.52
105	TC	72.6	77.6	85.0	92.6	80.4	82.7	89.6	97.3	85.9	86.5	92.6	100.0
	SHC	72.6	65.3	55.5	45.4	80.4	75.9	63.4	50.2	85.9	84.7	70.7	54.6
	kW	7.59	7.60	7.68	7.79	7.64	7.66	7.75	7.87	7.70	7.71	7.80	7.92
115	TC	70.1	74.5	81.7	89.1	77.7	79.4	86.0	93.5	82.9	83.1	88.8	96.2
	SHC	70.1	63.7	54.0	44.0	77.7	74.3	61.9	48.8	82.9	82.7	69.2	53.2
	kW	8.38	8.38	8.47	8.58	8.43	8.44	8.53	8.66	8.48	8.49	8.58	8.71

569D090/524A-B072 WITH STANDARD 3-ROW COIL

Temp (F) Air Entering Condenser (Edb)		Evaporator Air — Cfm											
		1800				2400				3000			
		Evaporator Air — Ewb (F)											
		57	62	67	72	57	62	67	72	57	62	67	72
80	TC	75.3	81.2	88.5	96.1	82.5	86.4	93.6	101.0	88.0	89.9	96.8	104.0
	SHC	74.3	65.8	56.3	46.4	82.5	75.7	63.5	50.9	88.0	84.1	70.0	54.9
	kW	5.77	5.82	5.91	6.00	5.84	5.88	5.97	6.07	5.90	5.93	6.01	6.12
85	TC	74.2	79.8	87.1	94.6	81.3	84.9	92.0	99.5	86.7	88.4	95.2	103.0
	SHC	73.4	65.2	55.6	45.8	81.3	75.0	62.8	50.2	86.7	83.3	69.4	54.3
	kW	6.12	6.18	6.27	6.37	6.20	6.24	6.33	6.44	6.26	6.28	6.38	6.48
95	TC	71.8	77.2	84.2	91.6	79.0	82.0	88.8	96.2	84.1	85.4	91.9	99.2
	SHC	71.6	63.8	54.3	44.6	79.0	73.6	61.5	49.0	84.1	81.7	68.1	53.0
	kW	6.83	6.89	6.98	7.10	6.91	6.95	7.05	7.17	6.99	7.00	7.10	7.22
100	TC	70.6	75.7	82.6	89.9	77.7	80.4	87.1	94.4	82.7	83.8	90.0	97.3
	SHC	70.5	63.1	53.6	43.9	77.7	72.8	60.8	48.3	82.7	80.7	67.4	52.3
	kW	7.22	7.28	7.38	7.50	7.31	7.35	7.45	7.58	7.39	7.40	7.51	7.63
105	TC	69.4	74.2	81.1	88.3	76.4	78.8	85.4	92.6	81.3	82.2	88.2	95.4
	SHC	69.4	62.4	53.0	43.3	76.4	72.0	60.1	47.7	81.3	79.8	66.7	51.7
	kW	7.61	7.67	7.78	7.91	7.70	7.75	7.86	7.99	7.79	7.80	7.91	8.04
115	TC	67.0	71.3	78.0	85.0	73.8	75.6	82.0	89.0	78.5	78.9	84.6	91.7
	SHC	67.0	60.9	51.6	41.9	73.8	70.5	58.7	46.4	78.5	77.9	65.3	50.3
	kW	8.39	8.45	8.59	8.73	8.49	8.54	8.66	8.80	8.59	8.60	8.71	8.86

LEGEND

Edb — Entering Dry Bulb
Ewb — Entering Wet Bulb
kW — Compressor Motor Power Input
SHC — Sensible Heat Capacity (1000 Btuh) Gross
TC — Total Capacity (1000 Btuh) Gross

*This combination is ENERGY STAR® compliant.

PERFORMANCE DATA (cont)

COMBINATION RATINGS (cont)

UNIT 569D090 (cont)

569D090/524A-C090 WITH HIGH-CAPACITY 4-ROW COIL*

Temp (F) Air Entering Condenser (Edb)		Evaporator Air — Cfm											
		2205				3000				3750			
		Evaporator Air — Ewb (F)											
		57	62	67	72	57	62	67	72	57	62	67	72
80	TC	86.0	90.4	98.0	106.0	94.1	95.7	103.0	111.0	96.9	97.8	104.0	112.0
	SHC	86.0	78.0	65.6	52.8	94.1	90.3	75.0	58.5	96.9	94.8	79.3	61.1
	kW	5.78	5.83	5.91	6.01	5.86	5.88	5.97	6.07	5.90	5.91	5.98	6.09
85	TC	84.8	88.9	96.4	104.0	92.7	94.1	101.0	109.0	95.4	96.2	102.0	110.0
	SHC	84.8	77.3	64.9	52.2	92.7	89.4	74.2	57.8	95.4	93.7	78.5	60.5
	kW	6.14	6.18	6.26	6.37	6.22	6.23	6.32	6.42	6.25	6.26	6.34	6.44
95	TC	82.3	85.8	93.1	101.0	90.0	90.9	97.3	105.0	92.6	93.1	98.7	106.0
	SHC	82.3	75.8	63.5	50.9	90.0	87.7	72.8	56.5	92.6	91.4	77.1	59.2
	kW	6.85	6.88	6.96	7.07	6.92	6.93	7.02	7.13	6.96	6.96	7.04	7.15
100	TC	81.0	84.2	91.3	99.1	88.5	89.2	95.4	103.0	91.0	91.4	96.8	104.0
	SHC	81.0	75.0	62.8	50.2	88.5	86.7	72.1	55.8	91.0	90.1	76.4	58.5
	kW	7.24	7.26	7.36	7.47	7.32	7.33	7.41	7.53	7.35	7.36	7.43	7.55
105	TC	79.6	82.5	89.6	97.2	87.0	87.5	93.5	101.0	89.5	89.7	94.9	102.0
	SHC	79.6	74.1	62.1	49.5	87.0	85.7	71.4	55.2	89.5	88.8	75.6	57.8
	kW	7.63	7.65	7.75	7.87	7.71	7.72	7.81	7.93	7.75	7.75	7.83	7.95
115	TC	77.0	79.2	86.0	93.5	83.9	84.1	89.8	97.2	86.3	86.4	91.0	98.3
	SHC	77.0	72.5	60.6	48.1	83.9	83.7	69.9	53.8	86.3	86.2	74.1	56.4
	kW	8.41	8.42	8.53	8.66	8.50	8.50	8.60	8.73	8.54	8.54	8.62	8.75

569D090/524A-B090 WITH STANDARD 3-ROW COIL

Temp (F) Air Entering Condenser (Edb)		Evaporator Air — Cfm											
		2205				3000				3750			
		Evaporator Air — Ewb (F)											
		57	62	67	72	57	62	67	72	57	62	67	72
80	TC	81.7	85.9	93.2	101.0	89.0	90.8	97.5	105.0	91.6	92.6	98.8	106.0
	SHC	81.7	74.2	62.4	50.2	89.0	85.2	70.9	55.4	91.6	89.4	74.7	57.7
	kW	5.83	5.88	5.97	6.07	5.92	5.94	6.02	6.12	5.95	5.96	6.04	6.14
85	TC	80.6	84.5	91.6	99.2	87.7	89.3	95.8	103.0	90.2	91.1	97.1	105.0
	SHC	80.6	73.5	61.7	49.6	87.7	84.5	70.2	54.8	90.2	88.4	74.1	57.1
	kW	6.19	6.23	6.33	6.43	6.28	6.30	6.39	6.49	6.31	6.32	6.40	6.51
95	TC	78.3	81.7	88.5	95.9	85.2	86.3	92.5	99.9	87.6	88.2	93.8	101.0
	SHC	78.3	72.1	60.4	48.4	85.2	82.9	69.0	53.6	87.6	86.4	72.8	55.9
	kW	6.90	6.95	7.05	7.17	7.00	7.02	7.11	7.23	7.04	7.05	7.13	7.25
100	TC	77.0	80.1	86.9	94.2	83.7	84.7	90.7	98.0	86.1	86.6	91.9	99.1
	SHC	77.0	71.3	59.8	47.7	83.7	81.9	68.3	52.9	86.1	85.2	72.1	55.2
	kW	7.30	7.34	7.45	7.57	7.40	7.42	7.52	7.64	7.44	7.45	7.54	7.66
105	TC	75.7	78.6	85.2	92.4	82.3	83.0	88.9	96.1	84.6	85.0	90.1	97.2
	SHC	75.7	70.6	59.1	47.0	82.3	80.9	67.6	52.2	84.6	83.9	71.4	54.6
	kW	7.69	7.74	7.86	7.98	7.80	7.82	7.92	8.05	7.84	7.85	7.94	8.07
115	TC	73.2	75.4	81.9	88.8	79.5	79.8	85.3	92.3	81.7	81.8	86.4	93.3
	SHC	73.2	69.0	57.7	45.7	79.5	79.0	66.1	50.9	81.7	81.4	70.0	53.2
	kW	8.48	8.53	8.67	8.79	8.61	8.61	8.73	8.87	8.65	8.65	8.75	8.89

LEGEND

Edb — Entering Dry Bulb
Ewb — Entering Wet Bulb
kW — Compressor Motor Power Input
SHC — Sensible Heat Capacity (1000 Btuh) Gross
TC — Total Capacity (1000 Btuh) Gross

*This combination is ENERGY STAR® compliant.

PERFORMANCE DATA (cont)

COMBINATION RATINGS (cont)

UNIT 569D120

569D120/524A-C120 WITH HIGH-CAPACITY 4-ROW COIL

Temp (F) Air Entering Condenser (Edb)		Evaporator Air — Cfm											
		3000				4000				5000			
		Evaporator Air — Ewb (F)											
		57	62	67	72	57	62	67	72	57	62	67	72
80	TC	117.0	122.0	132.0	142.0	127.0	129.0	138.0	148.0	134.0	134.0	141.0	151.0
	SHC	117.0	106.0	88.4	70.9	127.0	122.0	101.0	78.6	134.0	134.0	113.0	85.9
	kW	8.34	8.48	8.74	9.02	8.61	8.66	8.89	9.18	8.81	8.80	9.00	9.28
85	TC	115.0	120.0	129.0	140.0	125.0	127.0	135.0	145.0	132.0	132.0	139.0	148.0
	SHC	115.0	104.0	87.5	70.0	125.0	121.0	100.0	77.6	132.0	132.0	112.0	84.9
	kW	8.72	8.85	9.11	9.40	8.99	9.04	9.27	9.56	9.19	9.19	9.38	9.67
95	TC	112.0	116.0	125.0	135.0	121.0	122.0	130.0	140.0	128.0	128.0	134.0	143.0
	SHC	112.0	102.0	85.5	68.2	121.0	119.0	98.2	75.8	128.0	128.0	110.0	83.1
	kW	9.49	9.60	9.86	10.20	9.76	9.79	10.00	10.30	9.96	9.95	10.10	10.40
100	TC	110.0	113.0	122.0	132.0	119.0	120.0	127.0	137.0	125.0	125.0	131.0	140.0
	SHC	110.0	101.0	84.4	67.1	119.0	117.0	97.1	74.8	125.0	125.0	109.0	82.1
	kW	9.90	10.00	10.30	10.60	10.20	10.20	10.40	10.70	10.40	10.40	10.50	10.80
105	TC	108.0	111.0	120.0	129.0	117.0	117.0	125.0	134.0	123.0	123.0	128.0	137.0
	SHC	108.0	100.0	83.3	66.1	117.0	116.0	96.0	73.7	123.0	123.0	108.0	81.0
	kW	10.30	10.40	10.70	11.00	10.60	10.60	10.80	11.10	10.80	10.80	10.90	11.20
115	TC	104.0	106.0	114.0	124.0	112.0	112.0	119.0	128.0	118.0	118.0	122.0	131.0
	SHC	104.0	97.7	81.2	64.0	112.0	112.0	93.8	71.7	118.0	118.0	105.0	78.9
	kW	11.10	11.20	11.50	11.70	11.40	11.40	11.60	11.90	11.60	11.60	11.70	12.00

569D120/524A-B120 WITH STANDARD 3-ROW COIL

Temp (F) Air Entering Condenser (Edb)		Evaporator Air — Cfm											
		3000				4000				5000			
		Evaporator Air — Ewb (F)											
		57	62	67	72	57	62	67	72	57	62	67	72
80	TC	110.0	115.0	124.0	134.0	119.0	121.0	130.0	139.0	126.0	126.0	133.0	143.0
	SHC	110.0	99.4	83.3	66.8	119.0	114.0	94.6	73.6	126.0	125.0	105.0	79.9
	kW	8.19	8.32	8.55	8.82	8.41	8.48	8.70	8.96	8.59	8.60	8.80	9.06
85	TC	108.0	113.0	122.0	132.0	117.0	119.0	128.0	137.0	124.0	124.0	131.0	140.0
	SHC	108.0	98.4	82.4	66.0	117.0	113.0	93.7	72.8	124.0	123.0	104.0	79.0
	kW	8.57	8.70	8.93	9.20	8.80	8.85	9.08	9.35	8.97	8.98	9.17	9.44
95	TC	105.0	110.0	118.0	127.0	114.0	115.0	123.0	132.0	120.0	120.0	126.0	135.0
	SHC	105.0	96.6	80.7	64.3	114.0	111.0	91.9	71.1	120.0	120.0	102.0	77.3
	kW	9.34	9.45	9.69	9.96	9.57	9.61	9.83	10.10	9.73	9.74	9.93	10.20
100	TC	104.0	107.0	116.0	125.0	112.0	113.0	121.0	130.0	118.0	118.0	124.0	132.0
	SHC	104.0	95.5	79.7	63.4	112.0	109.0	90.9	70.2	118.0	118.0	101.0	76.4
	kW	9.76	9.86	10.10	10.40	9.98	10.00	10.20	10.50	10.10	10.10	10.30	10.60
105	TC	102.0	105.0	114.0	122.0	110.0	111.0	118.0	127.0	116.0	116.0	121.0	130.0
	SHC	102.0	94.4	78.7	62.4	110.0	108.0	89.9	69.2	116.0	116.0	100.0	75.5
	kW	10.20	10.30	10.5	10.80	10.40	10.40	10.60	10.90	10.60	10.60	10.70	11.00
115	TC	98.4	101.0	109.0	117.0	106.0	106.0	113.0	122.0	111.0	111.0	116.0	124.0
	SHC	98.4	92.2	76.7	60.5	106.0	105.0	87.8	67.3	111.0	111.0	97.9	73.6
	kW	11.00	11.10	11.30	11.60	11.20	11.20	11.40	11.70	11.40	11.40	11.50	11.80

LEGEND

Edb — Entering Dry Bulb
Ewb — Entering Wet Bulb
kW — Compressor Motor Power Input
SHC — Sensible Heat Capacity (1000 Btuh) Gross
TC — Total Capacity (1000 Btuh) Gross

PERFORMANCE DATA (cont)

COMBINATION RATINGS (cont)

UNIT 569D120 (cont)

569D120/524A-C150 WITH HIGH-CAPACITY 4-ROW COIL

Temp (F) Air Entering Condenser (Edb)		Evaporator Air — Cfm											
		3750				5000				6250			
		Evaporator Air — Ewb (F)											
		57	62	67	72	57	62	67	72	57	62	67	72
80	TC	126.0	129.0	138.0	149.0	136.0	136.0	143.0	153.0	142.0	142.0	147.0	156.0
	SHC	126.0	119.0	98.7	77.4	136.0	135.0	114.0	86.5	142.0	142.0	127.0	95.0
	kW	8.60	8.68	8.94	9.23	8.87	8.87	9.08	9.37	9.06	9.05	9.18	9.46
85	TC	124.0	127.0	136.0	146.0	134.0	134.0	141.0	151.0	140.0	140.0	144.0	154.0
	SHC	124.0	118.0	97.7	76.5	134.0	133.0	113.0	85.6	140.0	140.0	126.0	94.1
	kW	8.98	9.05	9.31	9.61	9.25	9.25	9.46	9.76	9.44	9.44	9.56	9.84
95	TC	120.0	122.0	131.0	141.0	129.0	129.0	136.0	145.0	136.0	136.0	139.0	148.0
	SHC	120.0	116.0	95.7	74.6	129.0	129.0	111.0	83.8	136.0	136.0	124.0	92.3
	kW	9.74	9.80	10.10	10.40	10.00	10.00	10.20	10.50	10.20	10.20	10.30	10.60
100	TC	118.0	120.0	128.0	138.0	127.0	127.0	133.0	142.0	133.0	133.0	136.0	145.0
	SHC	118.0	114.0	94.6	73.6	127.0	127.0	109.0	82.7	133.0	133.0	123.0	91.2
	kW	10.20	10.20	10.50	10.80	10.40	10.40	10.60	10.90	10.60	10.60	10.70	11.00
105	TC	116.0	117.0	126.0	135.0	125.0	125.0	130.0	139.0	130.0	130.0	133.0	142.0
	SHC	116.0	113.0	93.5	72.6	125.0	125.0	108.0	81.6	130.0	130.0	121.0	90.1
	kW	10.60	10.60	10.90	11.20	10.80	10.80	11.00	11.30	11.00	11.00	11.10	11.40
115	TC	112.0	112.0	120.0	129.0	120.0	120.0	124.0	133.0	125.0	125.0	127.0	135.0
	SHC	112.0	110.0	91.4	70.5	120.0	120.0	106.0	79.5	125.0	125.0	119.0	87.9
	kW	11.40	11.40	11.70	12.00	11.60	11.70	11.80	12.10	11.80	11.80	11.90	12.20

569D120/524A-B150 WITH STANDARD 3-ROW COIL

Temp (F) Air Entering Condenser (Edb)		Evaporator Air — Cfm											
		3750				5000				6250			
		Evaporator Air — Ewb (F)											
		57	62	67	72	57	62	67	72	57	62	67	72
80	TC	119.0	123.0	132.0	142.0	128.0	129.0	137.0	147.0	135.0	135.0	140.0	150.0
	SHC	119.0	112.0	93.2	73.4	128.0	127.0	106.0	81.4	135.0	135.0	118.0	88.6
	kW	8.42	8.51	8.77	9.05	8.66	8.68	8.90	9.18	8.84	8.84	8.99	9.27
85	TC	118.0	121.0	130.0	140.0	126.0	127.0	135.0	144.0	133.0	133.0	138.0	147.0
	SHC	118.0	111.0	92.3	72.5	126.0	126.0	105.0	80.5	133.0	133.0	117.0	87.8
	kW	8.80	8.89	9.14	9.43	9.05	9.06	9.28	9.56	9.22	9.22	9.37	9.65
95	TC	114.0	116.0	125.0	135.0	122.0	123.0	130.0	139.0	128.0	128.0	133.0	142.0
	SHC	114.0	109.0	90.4	70.7	122.0	122.0	103.0	78.7	128.0	128.0	115.0	86.0
	kW	9.57	9.64	9.89	10.20	9.81	9.81	10.00	10.30	9.99	9.99	10.10	10.40
100	TC	112.0	114.0	123.0	132.0	120.0	120.0	127.0	136.0	126.0	126.0	130.0	139.0
	SHC	112.0	108.0	89.3	69.7	120.0	120.0	102.0	77.7	126.0	126.0	114.0	85.0
	kW	9.98	10.00	10.30	10.60	10.20	10.20	10.40	10.70	10.40	10.40	10.50	10.80
105	TC	110.0	112.0	120.0	129.0	118.0	118.0	124.0	133.0	123.0	123.0	127.0	136.0
	SHC	110.0	106.0	88.2	68.7	118.0	118.0	101.0	76.7	123.0	123.0	113.0	84.0
	kW	10.40	10.40	10.70	11.00	10.60	10.60	10.80	11.10	10.80	10.80	10.90	11.20
115	TC	106.0	107.0	115.0	124.0	114.0	113.0	119.0	127.0	119.0	119.0	121.0	130.0
	SHC	106.0	104.0	86.1	66.6	114.0	113.0	99.1	74.6	119.0	119.0	110.0	81.9
	kW	11.20	11.20	11.50	11.80	11.40	11.40	11.60	11.90	11.60	11.60	11.70	12.00

LEGEND

Edb — Entering Dry Bulb
Ewb — Entering Wet Bulb
kW — Compressor Motor Power Input
SHC — Sensible Heat Capacity (1000 Btuh) Gross
TC — Total Capacity (1000 Btuh) Gross

PERFORMANCE DATA (cont)

COMBINATION RATINGS (cont)

UNIT 576C120

576C120/524A-C120 WITH HIGH-CAPACITY 4-ROW COIL

Temp (F) Air Entering Condenser (Edb)		Evaporator Air — Cfm											
		3000				4000				5000			
		Evaporator Air — Ewb (F)											
		57	62	67	72	57	62	67	72	57	62	67	72
80	TC	113.0	118.0	129.0	141.0	124.0	126.0	135.0	147.0	132.0	132.0	139.0	151.0
	SHC	113.0	104.0	87.4	70.5	124.0	121.0	101.0	78.8	132.0	132.0	113.0	86.6
	kW	8.00	8.12	8.35	8.61	8.26	8.29	8.49	8.75	8.43	8.43	8.58	8.82
85	TC	111.0	115.0	126.0	137.0	122.0	123.0	132.0	144.0	129.0	129.0	136.0	148.0
	SHC	111.0	102.0	86.1	69.3	122.0	119.0	99.5	77.6	129.0	129.0	112.0	85.4
	kW	8.39	8.51	8.76	9.05	8.67	8.69	8.91	9.20	8.86	8.86	9.01	9.28
95	TC	106.0	110.0	120.0	131.0	117.0	117.0	125.0	137.0	124.0	124.0	129.0	140.0
	SHC	106.0	99.8	83.7	66.9	117.0	116.0	96.9	75.1	124.0	124.0	109.0	82.9
	kW	9.17	9.28	9.58	9.93	9.49	9.51	9.76	10.10	9.72	9.72	9.88	10.20
100	TC	104.0	107.0	117.0	128.0	114.0	114.0	122.0	133.0	121.0	121.0	126.0	137.0
	SHC	104.0	98.4	82.4	65.7	114.0	114.0	95.6	73.9	121.0	121.0	108.0	81.7
	kW	9.55	9.65	9.98	10.40	9.90	9.90	10.20	10.50	10.10	10.10	10.30	10.60
105	TC	102.0	104.0	114.0	124.0	112.0	112.0	119.0	130.0	118.0	118.0	122.0	133.0
	SHC	102.0	97.0	81.1	64.5	112.0	112.0	94.3	72.7	118.0	118.0	106.0	80.5
	kW	9.93	10.00	10.40	10.80	10.30	10.30	10.60	11.00	10.60	10.60	10.70	11.10
115	TC	97.2	98.6	107.0	118.0	106.0	106.0	112.0	122.0	113.0	113.0	116.0	125.0
	SHC	97.2	94.2	78.6	62.1	106.0	106.0	91.7	70.2	113.0	113.0	104.0	78.0
	kW	10.70	10.80	11.20	11.60	11.10	11.10	11.40	11.80	11.40	11.40	11.50	12.00

576C120/524A-B120 WITH STANDARD 3-ROW COIL

Temp (F) Air Entering Condenser (Edb)		Evaporator Air — Cfm											
		3000				4000				5000			
		Evaporator Air — Ewb (F)											
		57	62	67	72	57	62	67	72	57	62	67	72
80	TC	107.0	112.0	123.0	134.0	118.0	119.0	129.0	140.0	125.0	125.0	133.0	144.0
	SHC	107.0	98.8	83.3	67.2	118.0	114.0	95.5	74.8	125.0	125.0	107.0	81.8
	kW	7.91	8.03	8.25	8.49	8.14	8.18	8.38	8.62	8.30	8.30	8.46	8.71
85	TC	105.0	110.0	120.0	131.0	115.0	117.0	126.0	137.0	122.0	122.0	129.0	141.0
	SHC	105.0	97.5	82.2	66.1	115.0	113.0	94.3	73.7	122.0	122.0	105.0	80.6
	kW	8.29	8.40	8.65	8.92	8.54	8.57	8.79	9.06	8.71	8.71	8.88	9.15
95	TC	101.0	105.0	114.0	125.0	111.0	111.0	120.0	131.0	117.0	117.0	123.0	134.0
	SHC	101.0	95.0	79.8	63.9	111.0	109.0	92.0	71.4	117.0	117.0	103.0	78.4
	kW	9.04	9.15	9.44	9.78	9.34	9.36	9.61	9.94	9.54	9.54	9.72	10.00
100	TC	98.9	102.0	111.0	122.0	108.0	109.0	117.0	127.0	115.0	115.0	120.0	131.0
	SHC	98.9	93.7	78.7	62.8	108.0	108.0	90.8	70.3	115.0	115.0	102.0	77.3
	kW	9.41	9.51	9.83	10.20	9.73	9.74	10.00	10.40	9.94	9.95	10.10	10.50
105	TC	96.8	99.4	108.0	119.0	106.0	106.0	113.0	124.0	112.0	112.0	117.0	127.0
	SHC	96.8	92.3	77.5	61.6	106.0	106.0	89.5	69.2	112.0	112.0	100.0	76.1
	kW	9.78	9.87	10.0	10.60	10.10	10.10	10.40	10.80	10.30	10.30	10.50	10.90
115	TC	92.5	94.1	103.0	113.0	101.0	101.0	107.0	117.0	107.0	107.0	110.0	120.0
	SHC	92.5	89.7	75.1	59.4	101.0	101.0	87.1	67.0	107.0	107.0	97.7	73.9
	kW	10.50	10.60	11.00	11.40	10.90	10.90	11.20	11.60	11.20	11.20	11.30	11.80

LEGEND

Edb — Entering Dry Bulb
Ewb — Entering Wet Bulb
kW — Compressor Motor Power Input
SHC — Sensible Heat Capacity (1000 Btuh) Gross
TC — Total Capacity (1000 Btuh) Gross

PERFORMANCE DATA (cont)

COMBINATION RATINGS (cont)

UNIT 576C120 (cont)

576C120/524A-C150 WITH HIGH-CAPACITY 4-ROW COIL

Temp (F) Air Entering Condenser (Edb)		Evaporator Air — Cfm											
		3750				5000				6250			
		Evaporator Air — Ewb (F)											
		57	62	67	72	57	62	67	72	57	62	67	72
80	TC	122.0	125.0	135.0	147.0	133.0	133.0	141.0	153.0	141.0	141.0	145.0	157.0
	SHC	122.0	117.0	97.7	77.1	133.0	133.0	113.0	86.9	141.0	141.0	127.0	96.0
	kW	8.23	8.28	8.51	8.77	8.47	8.47	8.64	8.88	8.62	8.62	8.72	8.95
85	TC	120.0	122.0	132.0	144.0	130.0	130.0	138.0	149.0	138.0	138.0	142.0	153.0
	SHC	120.0	116.0	96.5	76.0	130.0	130.0	112.0	85.6	138.0	138.0	126.0	94.7
	kW	8.64	8.69	8.94	9.22	8.90	8.90	9.07	9.35	9.07	9.07	9.16	9.42
95	TC	115.0	116.0	126.0	137.0	125.0	125.0	131.0	142.0	132.0	132.0	135.0	145.0
	SHC	115.0	113.0	93.9	73.6	125.0	125.0	109.0	83.2	132.0	132.0	123.0	92.3
	kW	9.46	9.50	9.78	10.10	9.76	9.76	9.95	10.30	9.97	9.97	10.10	10.40
100	TC	113.0	113.0	123.0	134.0	122.0	122.0	128.0	139.0	129.0	129.0	131.0	141.0
	SHC	113.0	111.0	92.6	72.4	122.0	122.0	108.0	82.0	129.0	129.0	121.0	91.1
	kW	9.86	9.89	10.20	10.60	10.20	10.20	10.40	10.70	10.40	10.40	10.50	10.80
105	TC	110.0	111.0	119.0	130.0	119.0	119.0	124.0	135.0	126.0	126.0	128.0	138.0
	SHC	110.0	109.0	91.4	71.1	119.0	119.0	107.0	80.8	126.0	126.0	120.0	89.9
	kW	10.30	10.30	10.60	11.00	10.60	10.60	10.80	11.20	10.80	10.80	10.90	11.30
115	TC	105.0	105.0	113.0	123.0	114.0	114.0	117.0	127.0	120.0	120.0	121.0	130.0
	SHC	105.0	105.0	88.8	68.7	114.0	114.0	104.0	78.4	120.0	120.0	117.0	87.4
	kW	11.10	11.10	11.40	11.90	11.50	11.50	11.60	12.10	11.70	11.70	11.80	12.20

576C120/524A-B150 WITH STANDARD 3-ROW COIL

Temp (F) Air Entering Condenser (Edb)		Evaporator Air — Cfm											
		3750				5000				6250			
		Evaporator Air — Ewb (F)											
		57	62	67	72	57	62	67	72	57	62	67	72
80	TC	115.0	118.0	129.0	140.0	125.0	126.0	134.0	146.0	132.0	132.0	138.0	149.0
	SHC	115.0	110.0	92.3	73.1	125.0	125.0	106.0	81.7	132.0	132.0	119.0	89.6
	kW	8.08	8.14	8.37	8.62	8.30	8.30	8.48	8.74	8.45	8.45	8.57	8.81
85	TC	113.0	116.0	126.0	137.0	123.0	123.0	131.0	142.0	130.0	130.0	134.0	146.0
	SHC	113.0	109.0	91.1	71.9	123.0	123.0	105.0	80.5	130.0	130.0	117.0	88.5
	kW	8.47	8.53	8.78	9.06	8.71	8.72	8.91	9.18	8.88	8.88	8.99	9.26
95	TC	109.0	110.0	120.0	131.0	118.0	118.0	124.0	136.0	124.0	124.0	128.0	139.0
	SHC	109.0	106.0	88.7	69.6	118.0	118.0	102.0	78.2	124.0	124.0	114.0	86.1
	kW	9.25	9.31	9.60	9.94	9.54	9.54	9.75	10.10	9.73	9.74	9.85	10.20
100	TC	106.0	108.0	116.0	127.0	115.0	115.0	121.0	132.0	121.0	121.0	124.0	135.0
	SHC	106.0	104.0	87.5	68.5	115.0	115.0	101.0	77.0	121.0	121.0	113.0	84.9
	kW	9.64	9.68	9.99	10.40	9.95	9.95	10.10	10.50	10.20	10.20	10.30	10.60
105	TC	104.0	105.0	113.0	124.0	112.0	113.0	118.0	129.0	118.0	118.0	121.0	131.0
	SHC	104.0	103.0	86.2	67.3	112.0	113.0	99.7	75.8	118.0	118.0	111.0	83.8
	kW	10.00	10.10	10.40	10.80	10.40	10.40	10.60	10.90	10.60	10.60	10.70	11.00
115	TC	99.2	99.3	107.0	117.0	107.0	107.0	111.0	121.0	113.0	113.0	114.0	124.0
	SHC	99.2	99.3	83.7	64.9	107.0	107.0	97.1	73.5	113.0	113.0	108.0	81.4
	kW	10.80	10.80	11.20	11.60	11.20	11.20	11.40	11.80	11.40	11.40	11.50	11.90

LEGEND

Edb — Entering Dry Bulb
Ewb — Entering Wet Bulb
kW — Compressor Motor Power Input
SHC — Sensible Heat Capacity (1000 Btuh) Gross
TC — Total Capacity (1000 Btuh) Gross

PERFORMANCE DATA (cont)

COMBINATION RATINGS (cont)

UNIT 569F120

569F120/524A-C120 WITH HIGH-CAPACITY 4-ROW COIL													
Temp (F) Air Entering Condenser (Edb)		Evaporator Air — Cfm											
		3000				4000				5000			
		Evaporator Air — Ewb (F)											
		57	62	67	72	57	62	67	72	57	62	67	72
80	TC	112.0	116.0	126.0	136.0	122.0	123.0	131.0	142.0	129.0	129.0	135.0	146.0
	SHC	112.0	102.0	85.9	68.8	122.0	119.0	98.8	76.7	129.0	129.0	111.0	84.2
	kW	7.90	7.94	8.06	8.19	8.01	8.03	8.13	8.27	8.10	8.10	8.18	8.32
85	TC	110.0	114.0	123.0	134.0	120.0	121.0	129.0	140.0	127.0	127.0	133.0	143.0
	SHC	110.0	102.0	85.0	67.9	120.0	118.0	97.9	75.8	127.0	127.0	110.0	83.3
	kW	8.35	8.39	8.51	8.65	8.46	8.47	8.58	8.72	8.55	8.55	8.63	8.77
95	TC	107.0	110.0	119.0	130.0	116.0	117.0	124.0	135.0	123.0	123.0	128.0	138.0
	SHC	107.0	99.6	83.2	66.3	116.0	115.0	96.1	74.1	123.0	123.0	108.0	81.6
	kW	9.24	9.28	9.40	9.56	9.36	9.37	9.48	9.63	9.46	9.46	9.53	9.69
100	TC	105.0	108.0	117.0	127.0	114.0	115.0	122.0	132.0	121.0	121.0	125.0	135.0
	SHC	105.0	98.6	82.3	65.4	114.0	114.0	95.1	73.2	121.0	121.0	107.0	80.7
	kW	9.74	9.78	9.91	10.10	9.87	9.87	9.98	10.10	9.97	9.97	10.00	10.20
105	TC	103.0	106.0	115.0	125.0	112.0	113.0	119.0	129.0	119.0	119.0	123.0	132.0
	SHC	103.0	97.5	81.3	64.4	112.0	112.0	94.1	72.3	119.0	119.0	106.0	79.8
	kW	10.20	10.30	10.40	10.60	10.40	10.40	10.50	10.70	10.50	10.50	10.50	10.70
115	TC	99.7	102.0	110.0	120.0	108.0	108.0	115.0	124.0	115.0	114.0	118.0	127.0
	SHC	99.7	95.5	79.5	62.6	108.0	108.0	92.2	70.5	115.0	114.0	104.0	78.0
	kW	11.20	11.30	11.40	11.60	11.40	11.40	11.50	11.70	11.50	11.50	11.60	11.70

569F120/524A-B120 WITH STANDARD 3-ROW COIL													
Temp (F) Air Entering Condenser (Edb)		Evaporator Air — Cfm											
		3000				4000				5000			
		Evaporator Air — Ewb (F)											
		57	62	67	72	57	62	67	72	57	62	67	72
80	TC	106.0	110.0	119.0	130.0	115.0	116.0	125.0	135.0	121.0	121.0	128.0	138.0
	SHC	106.0	97.2	81.5	65.3	115.0	112.0	93.2	72.4	121.0	121.0	104.0	79.0
	kW	7.83	7.89	7.98	8.11	7.94	7.95	8.05	8.17	8.01	8.01	8.09	8.22
85	TC	104.0	108.0	117.0	127.0	113.0	114.0	123.0	133.0	120.0	120.0	126.0	136.0
	SHC	104.0	96.3	80.7	64.5	113.0	111.0	92.3	71.7	120.0	120.0	103.0	78.2
	kW	8.28	8.33	8.43	8.56	8.38	8.40	8.49	8.63	8.46	8.46	8.54	8.67
95	TC	101.0	105.0	114.0	123.0	110.0	111.0	118.0	128.0	116.0	116.0	122.0	131.0
	SHC	101.0	94.5	79.1	63.0	110.0	108.0	90.7	70.2	116.0	116.0	101.0	76.7
	kW	9.18	9.21	9.33	9.47	9.28	9.29	9.39	9.54	9.36	9.36	9.44	9.58
100	TC	99.7	103.0	111.0	121.0	108.0	109.0	116.0	126.0	114.0	114.0	119.0	129.0
	SHC	99.7	93.6	78.3	62.2	108.0	107.0	89.8	69.3	114.0	114.0	100.0	75.9
	kW	9.67	9.71	9.83	9.97	9.78	9.79	9.90	10.00	9.87	9.87	9.94	10.1
105	TC	98.1	101.0	109.0	119.0	106.0	107.0	114.0	123.0	112.0	112.0	117.0	126.0
	SHC	98.1	92.6	77.4	61.3	106.0	106.0	89.0	68.5	112.0	112.0	99.3	75.1
	kW	10.20	10.20	10.30	10.50	10.30	10.30	10.40	10.60	10.40	10.40	10.40	10.60
115	TC	94.9	97.1	105.0	114.0	103.0	103.0	110.0	119.0	108.0	108.0	112.0	121.0
	SHC	94.9	90.6	75.7	59.7	103.0	103.0	87.3	66.8	108.0	108.0	97.5	73.4
	kW	11.20	11.20	11.30	11.50	11.30	11.30	11.40	11.60	11.40	11.40	11.50	11.60

LEGEND

Edb — Entering Dry Bulb
Ewb — Entering Wet Bulb
kW — Compressor Motor Power Input
SHC — Sensible Heat Capacity (1000 Btuh) Gross
TC — Total Capacity (1000 Btuh) Gross

PERFORMANCE DATA (cont)

COMBINATION RATINGS (cont)

UNIT 569F120 (cont)

569F120/524A-C150 WITH HIGH-CAPACITY 4-ROW COIL

Temp (F) Air Entering Condenser (Edb)		Evaporator Air — Cfm											
		3750				5000				6250			
		Evaporator Air — Ewb (F)											
		57	62	67	72	57	62	67	72	57	62	67	72
80	TC	121.0	123.0	132.0	143.0	131.0	131.0	138.0	148.0	140.0	138.0	143.0	153.0
	SHC	121.0	116.0	96.4	75.6	131.0	131.0	112.0	85.1	140.0	138.0	127.0	94.5
	kW	8.00	8.03	8.14	8.29	8.12	8.12	8.21	8.36	8.24	8.22	8.28	8.42
85	TC	119.0	121.0	130.0	141.0	129.0	129.0	135.0	146.0	138.0	137.0	140.0	150.0
	SHC	119.0	115.0	95.5	74.8	129.0	129.0	111.0	84.3	138.0	137.0	126.0	93.6
	kW	8.45	8.48	8.59	8.74	8.58	8.58	8.67	8.82	8.70	8.68	8.73	8.88
95	TC	115.0	117.0	125.0	136.0	125.0	125.0	131.0	141.0	134.0	133.0	135.0	145.0
	SHC	115.0	112.0	93.7	73.1	125.0	125.0	109.0	82.5	134.0	133.0	124.0	91.9
	kW	9.35	9.37	9.50	9.66	9.49	9.49	9.57	9.73	9.62	9.60	9.64	9.80
100	TC	113.0	115.0	123.0	133.0	123.0	123.0	128.0	138.0	131.0	131.0	132.0	142.0
	SHC	113.0	111.0	92.8	72.1	123.0	123.0	108.0	81.6	131.0	131.0	123.0	91.0
	kW	9.86	9.87	10.0	10.20	10.00	9.99	10.10	10.20	10.10	10.10	10.10	10.30
105	TC	112.0	113.0	121.0	131.0	121.0	121.0	125.0	135.0	129.0	129.0	130.0	139.0
	SHC	112.0	110.0	91.8	71.2	121.0	121.0	107.0	80.7	129.0	129.0	122.0	90.0
	kW	10.40	10.40	10.50	10.70	10.50	10.50	10.60	10.80	10.60	10.60	10.70	10.80
115	TC	108.0	108.0	116.0	126.0	116.0	116.0	120.0	130.0	124.0	124.0	124.0	133.0
	SHC	108.0	107.0	89.9	69.4	116.0	116.0	105.0	78.9	124.0	123.0	120.0	88.2
	kW	11.40	11.40	11.50	11.70	11.50	11.50	11.60	11.80	11.70	11.70	11.70	11.90

569F120/524A-B150 WITH STANDARD 3-ROW COIL

Temp (F) Air Entering Condenser (Edb)		Evaporator Air — Cfm											
		3750				5000				6250			
		Evaporator Air — Ewb (F)											
		57	62	67	72	57	62	67	72	57	62	67	72
80	TC	114.0	117.0	126.0	137.0	124.0	124.0	131.0	142.0	132.0	130.0	136.0	146.0
	SHC	114.0	109.0	91.1	71.7	124.0	124.0	105.0	80.0	132.0	130.0	118.0	88.2
	kW	7.93	7.96	8.07	8.20	8.03	8.04	8.13	8.27	8.14	8.12	8.19	8.33
85	TC	113.0	115.0	124.0	134.0	122.0	122.0	129.0	139.0	130.0	129.0	133.0	144.0
	SHC	113.0	108.0	90.2	70.8	122.0	122.0	104.0	79.2	130.0	129.0	117.0	87.4
	kW	8.37	8.40	8.51	8.65	8.49	8.49	8.58	8.72	8.59	8.57	8.64	8.78
95	TC	109.0	111.0	120.0	130.0	118.0	118.0	124.0	135.0	126.0	125.0	129.0	139.0
	SHC	109.0	106.0	88.5	69.2	118.0	118.0	102.0	77.6	126.0	125.0	115.0	85.8
	kW	9.27	9.29	9.41	9.56	9.39	9.39	9.48	9.63	9.51	9.48	9.55	9.70
100	TC	107.0	109.0	117.0	127.0	116.0	116.0	122.0	132.0	124.0	123.0	126.0	136.0
	SHC	107.0	105.0	87.6	68.3	116.0	116.0	101.0	76.7	124.0	123.0	114.0	84.9
	kW	9.77	9.79	9.91	10.10	9.90	9.89	9.99	10.10	10.00	9.99	10.10	10.20
105	TC	106.0	107.0	115.0	125.0	114.0	114.0	119.0	129.0	122.0	121.0	124.0	133.0
	SHC	106.0	103.0	86.7	67.4	114.0	114.0	100.0	75.8	122.0	121.0	113.0	84.0
	kW	10.30	10.30	10.40	10.60	10.40	10.40	10.50	10.70	10.50	10.50	10.60	10.70
115	TC	102.0	103.0	110.0	120.0	110.0	110.0	114.0	124.0	118.0	117.0	118.0	128.0
	SHC	102.0	101.0	84.8	65.7	110.0	110.0	98.1	74.1	118.0	117.0	111.0	82.3
	kW	11.30	11.30	11.40	11.60	11.40	11.40	11.50	11.70	11.50	11.50	11.60	11.70

LEGEND

Edb — Entering Dry Bulb
Ewb — Entering Wet Bulb
kW — Compressor Motor Power Input
SHC — Sensible Heat Capacity (1000 Btuh) Gross
TC — Total Capacity (1000 Btuh) Gross

ELECTRICAL DATA

569D072-120, 576C120, 569F120 UNITS

UNIT SIZE		FACTORY-INSTALLED OPTION	NOMINAL VOLTAGE	VOLTAGE RANGE*		COMPRESSOR		FAN MOTORS (Qty 2)		POWER SUPPLY	
			V-Ph-Hz	MIN	MAX	RLA	LRA	FLA (ea)	LRA (ea)	MCA	MOCP
569D	072	NONE OR DISCONNECT	208/230-3-60	187	254	19.2	146	0.9	1.6	25.8 30.6	35 35
		CONVENIENCE OUTLET									
		NONE OR DISCONNECT	460-3-60	418	506	9.6	73	0.4	0.9	12.8 15.0	20 20
		CONVENIENCE OUTLET									
		NONE OR DISCONNECT	575-3-60	523	632	7.7	58.4	0.4	0.9	10.2 12.0	15 15
		CONVENIENCE OUTLET									
	090	NONE OR DISCONNECT	208/230-3-60	187	254	25.6	190	1.5	3.1	35.0 39.8	60 60
		CONVENIENCE OUTLET									
		NONE OR DISCONNECT	460-3-60	418	506	12.8	95	0.7	1.9	17.4 19.6	30 30
		CONVENIENCE OUTLET									
		NONE OR DISCONNECT	575-3-60	523	632	10.2	76	0.7	1.9	13.8 15.5	20 20
		CONVENIENCE OUTLET									
	120	NONE OR DISCONNECT	208/230-3-60	187	254	37.8	239	1.5	3.1	50.3 55.1	60 70
		CONVENIENCE OUTLET									
		NONE OR DISCONNECT	460-3-60	418	506	17.2	125	0.7	1.9	22.9 25.1	30 30
		CONVENIENCE OUTLET									
		NONE OR DISCONNECT	575-3-60	523	632	13.4	80	0.7	1.9	17.8 19.5	25 25
		CONVENIENCE OUTLET									
576C	120	NONE OR DISCONNECT	208/230-3-60	187	254	36	198	1.5	3.1	48.0 52.8	60 70
		CONVENIENCE OUTLET									
		NONE OR DISCONNECT	460-3-60	418	506	18	99	0.7	1.9	23.9 26.1	35 35
		CONVENIENCE OUTLET									
		NONE OR DISCONNECT	575-3-60	523	632	14	79	0.7	1.9	18.6 20.3	30 30
		CONVENIENCE OUTLET									
569F	120	NONE OR DISCONNECT	208/230-3-60	187	254	16	125	1.5	3.1	39.0 43.8	50 50
		CONVENIENCE OUTLET									
		NONE OR DISCONNECT	460-3-60	418	506	8	66.5	0.7	1.9	19.4 21.6	25 25
		CONVENIENCE OUTLET									
		NONE OR DISCONNECT	575-3-60	523	632	6.4	50	0.7	1.9	15.8 17.5	20 20
		CONVENIENCE OUTLET									

LEGEND

FLA — Full Load Amps
LRA — Locked Rotor Amps
MCA — Minimum Circuit Amps
MOCP — Maximum Overcurrent Protection
NEC — National Electrical Code
RLA — Rated Load Amps

*Units are suitable for use on electrical systems where voltage supplied to the unit terminals is not below or above the listed limits.

NOTES:

1. The MCA and MOCP values are calculated in accordance with the NEC, Article 440.
2. Motor RLA and LRA values are established in accordance with Underwriters' Laboratories (UL), Standard 1995.
3. The 575-v units are UL, Canada-listed only.
4. Convenience outlet is available as either a factory-installed option or a field-installed accessory and is 115-v, 1 ph, 60 Hz.

APPLICATION DATA — 569D072-120, 576C090-120, 569F120

OPERATING LIMITS

Maximum Cooling Outdoor	115 F
Minimum Outdoor Ambient	See Minimum Outdoor-Air Operating Temperature table at right.
Minimum Return-Air Temperature	55 F
Maximum Return-Air Temperature	95 F
Normal Acceptable Saturation Suction Temperature Range	25 to 55 F
Maximum Discharge Temperature	275 F
Minimum Discharge Superheat	60 F

NOTES:
1. Select air handler at no less than 300 cfm/ton (nominal condensing unit capacity).
2. Total combined draw of the field-supplied liquid line solenoid valve and air handler fan contactor must not exceed 22 va. If the specified va must be exceeded, use a remote relay to control the load.

1. **LIQUID LINE —** For applications with liquid lift greater than 20 ft, use 1/2-in. liquid line where 3/8 in. is shown; use 5/8-in. liquid line where 1/2 in. is shown. The maximum liquid lift is 60 ft.

MAXIMUM REFRIGERANT CHARGE

UNIT SIZE		R-22 (lb)
569D	**072**	17.3
	090	34.2
	120	34.2
576C	**120**	34.2
569F	**120**	(2) 17.1

2. **REFRIGERANT PIPING —** It is recommended that the refrigerant piping for all commercial split systems include a liquid line solenoid valve, a liquid line filter drier, and a sight glass.

   For refrigerant lines longer than 75 lineal ft, a liquid line solenoid valve and a suction accumulator are required. Refer to the Refrigerant Specialties table.

MINIMUM OUTDOOR-AIR OPERATING TEMPERATURE

UNIT SIZE		COMPR CAPACITY	COND TEMP (F)	MINIMUM OUTDOOR TEMP (F)	
				Std	With Motormaster® Control
569D	**072**	100%	90	35	–20
	090	100%	90	35	
	120	100%	90	35	
576C	**120***	100%	90	35	
		67%	80	35	
569F	**120**	100%	90	35	

*Unit has one step of unloading.

REFRIGERANT PIPING SIZES

UNIT SIZE		LINEAR LENGTH OF PIPING — FT							
		0-25		25-50		50-75		75-100	
		Line Size (in. OD)							
		L	S	L	S	L	S	L	S
569D	**072**	3/8	1 1/8	3/8	1 1/8	3/8	1 1/8	3/8	1 1/8
	090	3/8	1 1/8	1/2	1 1/8	1/2	1 1/8	1/2	1 1/8
	120	1/2	1 3/8	1/2	1 3/8	1/2	1 3/8	1/2	1 3/8
576C	**120**	1/2	1 3/8	1/2	1 3/8	1/2	1 3/8	1/2	1 3/8
569F	**120**	(2) 3/8	(2) 1 1/8	(2) 3/8	(2) 1 1/8	(2) 3/8	(2) 1 1/8	(2) 3/8	(2) 1 1/8

LEGEND

L — Liquid Line **S —** Suction Line

NOTES:
1. Pipe sizes are based on a 2° F loss for liquid and suction lines.
2. Pipe sizes are based on the maximum linear length, shown for each column, plus a 50% allowance for fittings.
3. Charge units with R-22 in accordance with unit installation instructions.

REFRIGERANT SPECIALTIES PART NUMBERS

UNIT	LIQUID LINE SIZE (in.)	LIQUID LINE SOLENOID VALVE (LLSV)	LLSV COIL	SIGHT GLASS	FILTER DRIER	SUCTION LINE ACCUMULATOR
569D072	3/8	200RB5T3M	AMG/24V	AMI-1TT3	P502-8304S*	S-7063S*
569D090	3/8	200RB5T3M	AMG/24V	AMI-1TT3	P502-8304S*	S-7063S*
	1/2	200RB5T4M	AMG/24V	AMI-1TT4	P502-8304S	S-7063S*
569D120	1/2	200RB6T4M	AMG/24V	AMI-1TT4	P502-8307S*	S-7063
576C120	1/2	200RB6T4M	AMG/24V	AMI-1TT4	P502-8307S*	S-7063
	3/8	200RB5T3M Qty 2	AMG/24V Qty 2	AMI-1TT3 Qty 2	P502-8304S* Qty 2	S-7061 Qty 2

*Bushings required.

TYPICAL PIPING AND WIRING

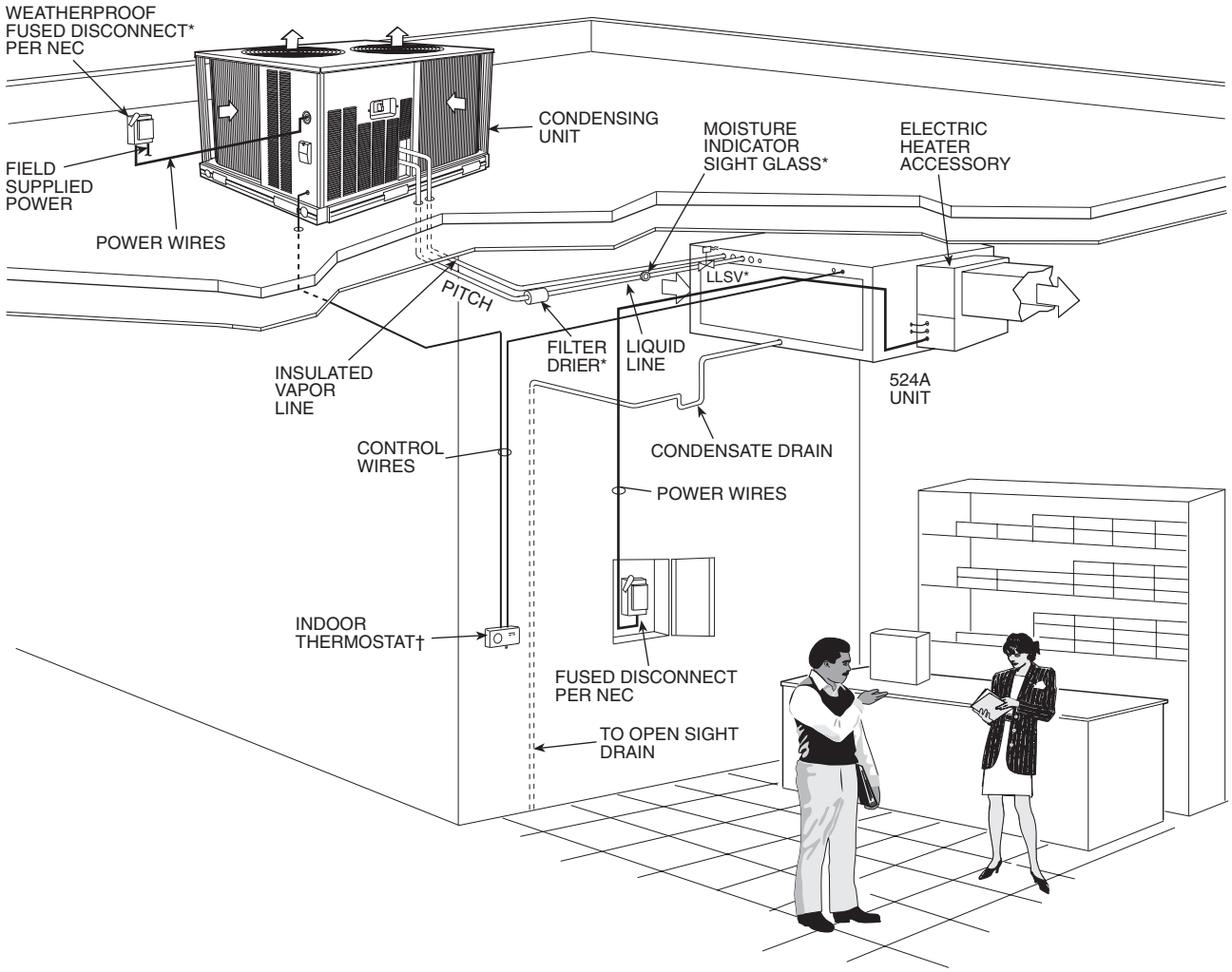

LEGEND

LLSV — Liquid Line Solenoid Valve
NEC — National Electrical Code
TXV — Thermostatic Expansion Valve

*Field supplied.
†Accessory item.

NOTES:

1. All piping must follow standard refrigerant piping techniques. Refer to Carrier System Design Manual for details.
2. All wiring must comply with the applicable local and national codes.
3. Wiring and piping shown are general points-of-connection guides only and are not intended for, or to include all details for, a specific installation.
4. Liquid line solenoid valve (solenoid drop control) is recommended to prevent refrigerant migration to the compressor.
5. Internal factory-supplied TXVs not shown.

Rooftop Installation — 569D072-120, 576C120

COMMERCIAL AIR-COOLED CONDENSING UNITS

HVAC GUIDE SPECIFICATIONS

SIZE RANGE: 6 TO 10 TONS, NOMINAL

BRYANT MODEL NUMBERS: 569D, SIZES 072-120
576C, SIZE 120

PART 1 — GENERAL

1.01 SYSTEM DESCRIPTION

Outdoor-mounted, air-cooled condensing unit suitable for on-the-ground or rooftop installation. Unit shall consist of a reciprocating air-conditioning compressor assembly (576C) or scroll compressor (569D), an air-cooled coil, propeller-type condenser fan, and a control box. Unit shall discharge supply air upward as shown on contract drawings. Unit shall be used in a refrigeration circuit matched with a packaged air-handling unit.

1.02 QUALITY ASSURANCE

A. Unit shall be rated in accordance with ARI latest revisions.

B. Unit construction shall comply with ANSI/ASHRAE 15 safety code latest revision and comply with NEC.

C. Unit shall be constructed in accordance with UL 1995 standard and shall carry the UL and UL, Canada label.

D. Unit cabinet shall be capable of withstanding 500-hour salt spray exposure per ASTM B117 (scribed specimen).

E. Air-cooled condenser coils for semi-hermetic compressor units (576C) shall be leak tested at 150 psig and pressure tested at 480 psig. Air-cooled condenser coils for scroll compressor units (569D) shall be leak tested at 200 psig, and pressure tested at 428 psig.

F. Unit shall be manufactured in a facility registered to ISO 9001:2000 manufacturing quality standard.

1.03 DELIVERY, STORAGE, AND HANDLING

Unit shall be shipped as single package only, and shall be stored and handled according to unit manufacturer's recommendations.

1.04 WARRANTY (FOR INCLUSION BY SPECIFYING ENGINEER.)

PART 2 — PRODUCTS

2.01 EQUIPMENT

A. General:

Factory-assembled, single piece, air-cooled condensing unit. Contained within the unit enclosure shall be all factory wiring, piping, controls, compressor, holding charge (R-22), and special features required prior to field start-up.

B. Unit Cabinet:

1. Unit cabinet shall be constructed of galvanized steel, bonderized and coated with a prepainted baked enamel finish.
2. A heavy-gage roll-formed perimeter base rail with forklift slots and lifting holes shall be provided to facilitate rigging.

C. Fans:

1. Condenser fans shall be direct driven, propeller-type, discharging air vertically upward.
2. Fan blades shall be balanced.
3. Condenser fan discharge openings shall be equipped with PVC coated steel wire safety guards.
4. Condenser fan and motor shaft shall be corrosion resistant.

D. Compressor:

1. Compressor shall be of the scroll type (569D) or semi-hermetic reciprocating type (576C).
2. Compressors shall be mounted on vibration isolators.
3. Compressors shall include overload protection.
4. Compressors shall be equipped with a crankcase heater.
5. Compressor shall be equipped with internal high discharge temperature protection (569D072 and 120 only).
6. Compressor shall unload using suction cutoff unloading (576C120 only). Electric solenoid unloading available as an accessory.

E. Condenser Coil:

1. Condenser coil shall be air-cooled and circuited for integral subcooler.
2. Coil shall be constructed of aluminum fins (copper fins optional) mechanically bonded to internally grooved seamless copper tubes which are then cleaned, dehydrated, and sealed.

F. Refrigeration Components:

Refrigeration circuit components shall include liquid line service valve, suction line service valve, liquid filter drier, a full charge of compressor oil, and a holding charge of refrigerant. Unit 569D120 shall include an accumulator. Units with semi-hermetic compressors (576C) shall have oil-level sight glass and all units shall have crankcase heater.

G. Controls and Safeties:

1. Minimum control functions shall include:
   a. Control wire terminal blocks.
   b. Compressor lockout on auto-reset safety until reset from thermostat.
2. Minimum safety devices which are equipped with automatic reset (after resetting first at thermostat), shall include:
   a. High discharge pressure cutout.
   b. Low Pressure cutout.
   c. High discharge temperature cutout (569D090 only).

H. Operating Characteristics:

1. The capacity of the condensing unit shall meet or exceed Btuh at a suction temperature of _____ F. The power consumption at full load shall not exceed _____ kW.
2. The combination of the condensing unit and the evaporator or fan coil unit shall have a total net cooling capacity of _____ Btuh or greater at conditions of _____ cfm entering-air temperature at the evaporator at _____ F wet bulb and _____ F dry bulb, and air entering the condensing unit at _____ F.
3. The system shall have an EER of _____ Btuh/Watt or greater at standard ARI conditions.

I. Electrical Requirements:

1. Nominal unit electrical characteristics shall be _____ v, 3-ph, 60 Hz. The unit shall be capable of satisfactory operation within voltage limits of _____ v to _____ v.
2. Unit electrical power shall be single-point connection.
3. Unit control circuit shall contain a 24-v transformer for unit control.

GUIDE SPECIFICATIONS — 569D072-120, 576C120 (cont)

J. Special Features:

1. Low-Ambient Temperature Control Accessory:

   Low-ambient control shall be available as a factory-installed option or a field-installed accessory and shall regulate speed of condenser-fan motor in response to the saturated condensing temperature of the unit. The control shall maintain correct condensing pressure at outdoor temperatures down to –20 F (fan motor change required for 569D and 576C units).

2. Optional Condenser Coil Materials:

   a. Pre-Coated Aluminum-Fin Coils:

      Shall have a durable epoxy-phenolic coating to provide protection in mildly corrosive coastal environments. Coating shall be applied to the aluminum fin stock prior to the fin stamping process to create an inert barrier between the aluminum fin and copper tube. Epoxy-phenolic barrier shall minimize galvanic action between dissimilar metals.

   b. E-Coated Aluminum-Fin Coils:

      Shall have a flexible epoxy polymer coating uniformly applied to all coil surface areas without material bridging between fins. Coating process shall ensure complete coil encapsulation. Color shall be high gloss black with gloss requirements of 60° of 65-90% per ASTM D523-89. Uniform dry film thickness from 0.8 to 1.2 mil on all surface areas including fin edges. Superior hardness characteristics of 2H per ASTM D3363-92A and cross hatch adhesion of 4B-5B per ASTM D3359-93. Impact resistance shall be up to 160 in./lb (ASTM D2794-93). Humidity and water immersion resistance shall be up to a minimum of 1000 and 250 hours respectively (ASTM-D2247-92 and ASTM D870-92). Corrosion durability shall be confirmed through testing to no less than 1000 hours salt spray per ASTM B117-90. Coil construction shall be aluminum-fins mechanically bonded to copper tubes.

3. Thermostat Control Accessory:

   a. Commercial Electronic Thermostat with 7-day timeclock, auto-changeover, multi-stage capability, and large LCD temperature display.

   b. Commercial Electronic Non-programmable Thermostat with auto-changeover, multi-stage capacity, and large LCD display.

4. Hail Guard Accessory:

   Hail guard package shall protect coils against damage from hail and other flying debris.

5. Condenser Coil Grille Accessory:

   Grille shall add decorative appearance to unit and protect condenser coil after installation.

6. Electric Solenoid Unloader Accessory:

   Electric unloader valve piston, coil, and hardware shall be supplied to convert the pressure-operated compressor unloader to electric unloading (576C120 only).

7. Unit-Mounted, Non-Fused Disconnect Switch:

   Shall be factory-installed, internally mounted. NEC and UL approved non-fused switch shall provide unit power shutoff. Shall be accessible from outside the unit and shall provide power off lockout capability. Not to be used when rooftop electrical rating exceeds 80 amperes.

8. Convenience Outlet:

   Shall be factory-installed and internally mounted with easily accessible 115-v female receptacle. Shall include 15 amp GFI receptacle with independent fuse protection. Voltage required to operate convenience outlet shall be provided by a factory-installed step-down transformer. Shall be accessible from outside the unit.

GUIDE SPECIFICATIONS — 569F120

COMMERCIAL AIR-COOLED CONDENSING UNITS

HVAC GUIDE SPECIFICATIONS

SIZE RANGE: 10 TONS, NOMINAL

BRYANT MODEL NUMBER: 569F, SIZE 120

PART 1 — GENERAL

1.01 SYSTEM DESCRIPTION

Outdoor-mounted, air-cooled condensing unit suitable for on-the-ground or rooftop installation. Unit shall have 2 independent refrigeration circuits. Unit shall consist of dual scroll compressors, air-cooled coils, propeller-type condenser fans, and a control box. Unit shall discharge supply air upward as shown on contract drawings. Unit shall be used in a refrigeration circuit matched with a packaged air-handling unit.

1.02 QUALITY ASSURANCE

A. Unit shall be rated in accordance with ARI Standard 210/240, latest revision.

B. Unit construction shall comply with ANSI/ASHRAE 15 safety code latest revision and comply with NEC.

C. Unit shall be constructed in accordance with UL 1995 standard and shall carry the UL and UL, Canada label.

D. Unit cabinet shall be capable of withstanding 500-hour salt spray exposure per ASTM B117 (scribed specimen).

E. Air-cooled condenser coils shall be leak tested at 200 psig, and pressure tested at 428 psig.

F. Unit shall be manufactured in a facility registered to ISO 9001:2000 manufacturing quality standard.

1.03 DELIVERY, STORAGE, AND HANDLING

Unit shall be shipped as single package only, and shall be stored and handled according to unit manufacturer's recommendations.

1.04 WARRANTY (FOR INCLUSION BY SPECIFYING ENGINEER.)

PART 2 — PRODUCTS

2.01 EQUIPMENT

A. General:

Factory-assembled, single piece, air-cooled condensing unit. Contained within the unit enclosure shall be all factory wiring, piping, controls, compressor, holding charge (R-22), and special features required prior to field start-up.

B. Unit Cabinet:

1. Unit cabinet shall be constructed of galvanized steel, bonderized and coated with a prepainted baked enamel finish.
2. A heavy-gage roll-formed perimeter base rail with forklift slots and lifting holes shall be provided to facilitate rigging.

C. Fans:

1. Condenser fans shall be direct driven, propeller-type, discharging air vertically upward.
2. Fan blades shall be balanced.
3. Condenser fan discharge openings shall be equipped with PVC coated steel wire safety guards.
4. Condenser fan and motor shaft shall be corrosion resistant.

D. Compressor:

1. Compressors shall be of the hermetic scroll type.
2. Compressors shall be mounted on vibration isolators.
3. Compressors shall include overload protection.
4. Compressors shall be equipped with a crankcase heater.
5. Compressors shall be equipped with high discharge temperature protection.

E. Condenser Coil:

1. Condenser coil shall be air-cooled and circuited for integral subcooler.
2. Coil shall be constructed of aluminum fins (copper fins optional) mechanically bonded to internally grooved seamless copper tubes which are then cleaned, dehydrated, and sealed.

F. Refrigeration Components:

Refrigeration circuit components shall include liquid line service valve, suction line service valve, a full charge of compressor oil, and a holding charge of refrigerant.

G. Controls and Safeties:

1. Minimum control functions shall include:
   a. Control wire terminal blocks.
   b. Compressor lockout on auto-reset safety until reset from thermostat.
2. Minimum safety devices which are equipped with automatic reset (after resetting first at thermostat), shall include:
   a. High discharge pressure cutout.
   b. Low pressure cutout.

H. Operating Characteristics:

1. The capacity of the condensing unit shall meet or exceed _____ Btuh at a suction temperature of _____ F. The power consumption at full load shall not exceed _____ kW.
2. The combination of the condensing unit and the evaporator or fan coil unit shall have a total net cooling capacity of _____ Btuh or greater at conditions of _____ cfm entering-air temperature at the evaporator at _____ F wet bulb and _____ F dry bulb, and air entering the condensing unit at _____ F.
3. The system shall have an EER of _____ Btuh/ Watt or greater at standard ARI conditions.

I. Electrical Requirements:

1. Nominal unit electrical characteristics shall be _____ v, 3-ph, 60 Hz. The unit shall be capable of satisfactory operation within voltage limits of _____ v to _____ v.
2. Unit electrical power shall be single-point connection.
3. Unit control circuit shall contain a 24-v transformer for unit control.

J. Special Features:

1. Low-Ambient Temperature Control:

   A low-ambient temperature control shall be available as a factory-installed option or as a field-installed accessory. This low-ambient control shall regulate speed of the condenser-fan motors in response to the saturated condensing temperature of the unit. The control shall maintain correct condensing pressure at outdoor temperatures down to –20 F.

2. Gage Panel Package:

   Gage panel package shall include a suction and discharge pressure gage.

GUIDE SPECIFICATIONS — 569F120 (cont)

3. Optional Condenser Coil Materials:
   a. Pre-Coated Aluminum-Fin Coils:

      Shall have a durable epoxy-phenolic coating to provide protection in mildly corrosive coastal environments. Coating shall be applied to the aluminum fin stock prior to the fin stamping process to create an inert barrier between the aluminum fin and copper tube. Epoxy-phenolic barrier shall minimize galvanic action between dissimilar metals.

   b. E-Coated Aluminum-Fin Coils:

      Shall have a flexible epoxy polymer coating uniformly applied to all coil surface areas without material bridging between fins. Coating process shall ensure complete coil encapsulation. Color shall be high gloss black with gloss requirements of 60° of 65 to 90% per ASTM D523-89. Uniform dry film thickness from 0.8 to 1.2 mil on all surface areas including fin edges. Superior hardness characteristics of 2H per ASTM D3363-92A and cross hatch adhesion of 4B-5B per ASTM D3359-93. Impact resistance shall be up to 160 in./lb (ASTM D2794-93). Humidity and water immersion resistance shall be up to a minimum of 1000 and 250 hours respectively (ASTM D2247-92 and ASTM D870-92). Corrosion durability shall be confirmed through testing to no less than 1000 hours salt spray per ASTM B117-90. Coil construction shall be aluminum fins mechanically bonded to copper tubes.

4. Thermostat Controls:
   a. Programmable multi-stage thermostat with 7-day clock, holiday scheduling, large backlit display, remote sensor capability, and Title 24 compliance.
   b. Commercial Electronic Thermostat with 7-day timeclock, auto-changeover, multi-stage capability, and large LCD temperature display.

5. Hail Guard Package:

   Hail guard package shall protect coils against damage from hail and other flying debris.

6. Condenser Coil Grille:

   Grille shall add decorative appearance to unit and protect condenser coil after installation.

7. Unit-Mounted, Non-Fused Disconnect Switch:

   Shall be factory-installed, internally mounted. NEC and UL approved non-fused switch shall provide unit power shutoff. Shall be accessible from outside the unit and shall provide power off lockout capability.

8. Convenience Outlet:

   Shall be factory-installed and internally mounted with easily accessible 115-v female receptacle. Shall include 15 amp GFI receptacle with independent fuse protection. Voltage required to operate convenience outlet shall be provided by a factory-installed step-down transformer. Shall be accessible from outside the unit.

MODEL NUMBER NOMENCLATURE

566D E X 150 000 – –

566D — Commercial Air-Cooled Condensing Unit With Semi-Hermetic Compressor
566E — Dual Circuit Commercial Air-Cooled Condensing Unit With Scroll Compressors

Voltage Designation
E — 460-3-60
P — 208/230-3-60
T — 575-3-60

Heating
X — None

Nominal Tons Cooling
150 — 12-1/2
180 — 15
240 — 20

Heating Capacity
000 — No Heat

Factory-Installed Options*

*Contact your local representative for more details.

Quality Assurance

Certified to ISO 9001:2000

PHYSICAL DATA

566D150-240 UNITS

UNIT	566D150	566D180	566D240
NOMINAL CAPACITY (tons)	12 1/2	15	20
OPERATING WEIGHTS (lb)			
Aluminum-Fin Coil (Standard)	779	789	929
Copper-Fin Coil (Optional)	919	929	1040
REFRIGERANT TYPE*		R-22	
Operating Charge, Typical (lb)†	23	23	28
Shipping Charge (lb)	3.1	3.1	3.1
COMPRESSOR		Reciprocating, Semi-Hermetic	
Qty...Model	1...06DD328	1...06DD537	1...06E4250
No. Cylinders	6	6	4
Speed (rpm)	1750	1750	1750
Oil Charge (pt)	10	10	15.5
Capacity Steps			
Accessory	33**, 66, 100	33**, 66, 100	—
Standard	66, 100	66, 100	50, 100
Unloader Setting (psig)			
Load		70 ± 1	
Unload		60 ± 2	
Crankcase Heater Watts		125	
CONDENSER FANS		Axial Flow, Direct Drive	
Qty...Rpm		2...1075	
Diameter (in.)		26	
Nominal Hp		1/2	
Nominal Airflow (cfm, total)		11,000	
Watts (total)		1460	
CONDENSER COIL		Copper Tubes, Aluminum Fins	
Rows...Fins/in.	3...15	3...15	3...15
Face Area (sq ft)	29.2	29.2	29.2
Storage Capacity (lb)††	48	48	38
CONTROLS			
Pressurestat (psig)			
High Pressure			
Cutout		395 ± 10	
Cut-in		295 ± 20	
Low Pressure			
Cutout		27 ± 4	
Cut-in		67 ± 7	
FAN CYCLING CONTROLS			
Operating Pressure (psig)			
No. 2 Fan, Close		255 ± 10	
Open		160 ± 10	
PRESSURE RELIEF			
Location		Liquid Line	
Temperature (F)		200	
PIPING CONNECTIONS (in. ODM)			
Suction	1 3/8	1 3/8	1 5/8
Liquid		5/8	
Hot Gas Stub		3/8	

*Unit is factory-supplied with holding charge only.
†Typical operating charge with 25 ft of interconnecting piping. Operating charge is approximate for maximum system capacity.
**Indicates capacity step (%) with electric unloader accessory.
††Storage capacity is measured at liquid saturated temperatures of 120 F.

PHYSICAL DATA (cont)

566E150-240 UNITS

UNIT	566E150	566E180	566E240
NOMINAL CAPACITY (tons)	12 1/2	15	20
OPERATING WEIGHTS (lb)			
Aluminum-Fin Coil (Standard)	676	740	764
Copper-Fin Coil (Optional)	822	886	904
REFRIGERANT TYPE*		R-22	
Operating Charge, Typical (lb)†	23	23	28
Shipping Charge (lb)	3.1	3.1	3.1
COMPRESSOR		Scroll	
Qty...Model	2...ZR72	2...ZR94	2...ZR125
Speed (rpm)	3500	3500	3500
Oil Charge (oz)	60 (ea)	85 (ea)	110 (ea)
Crankcase Heater Watts		70	
CONDENSER FANS			
Qty...Rpm		2...1075	
Diameter (in.)		26	
Nominal Hp		1/2	
Nominal Airflow (cfm, total)		11,000	
Watts (total)		1460	
CONDENSER COIL			
Rows...Fins/in.		3...15	
Face Area (sq ft)		29.2	
Storage Capacity (lb)**		48	
CONTROLS			
Pressurestat (psig)			
High Pressure			
Cutout		426 ± 7	
Cut-in		320 ± 20	
Low Pressure			
Cutout		27 ± 4	
Cut-in		67 ± 7	
FAN CYCLING CONTROLS			
Operating Pressure (psig)			
No. 2 Fan, Close		255 ± 10	
Open		160 ± 10	
PRESSURE RELIEF			
Location		Liquid Line	
Temperature (F)		200	
PIPING CONNECTIONS (in. ODM)			
Suction		(2) 1 3/8	
Liquid		(2) 1/2	
Hot Gas Stub		3/8	

*Unit is factory-supplied with holding charge only.
†Typical operating charge with 25 ft of interconnecting piping. Operating charge is approximate for maximum system capacity.
**Storage capacity is measured at liquid saturated temperatures of 120 F.

NOTES:

1. Service clearances are as follows:
   Side (compressor) — 3½ ft
   Side (opposite compressor) — 3 ft
   Ends — 2 ft
   Top — 5 ft
2. See page 38 for corner weights and unit center of gravity.

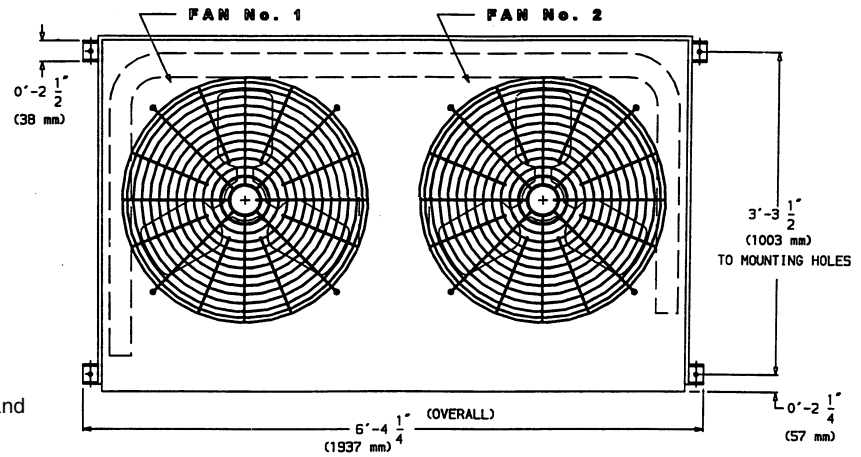

TOP VIEW

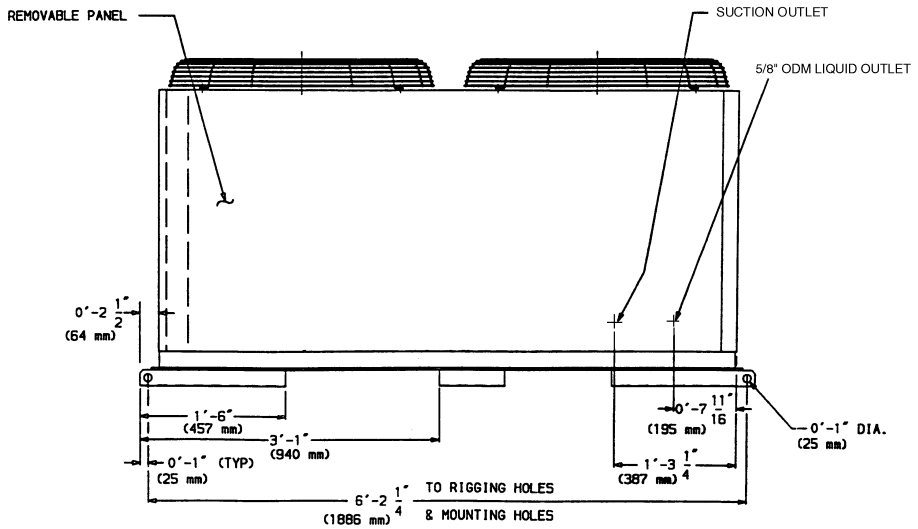

SIDE VIEW

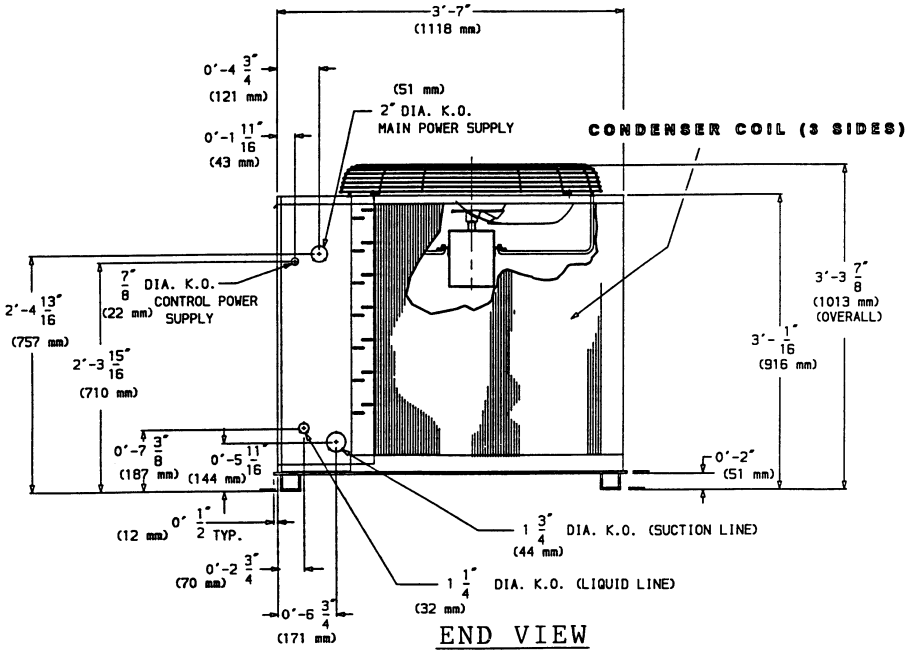

END VIEW

566D150-240

NOTES:

1. Service clearances are as follows:
   Side (compressor) — 3½ ft (1067 mm)
   Side (opposite compressor) — 3 ft (914 mm)
   Ends — 2 ft (610 mm)
   Top — 5 ft (1524 mm)
2. See page 38 for corner weights and unit center of gravity.

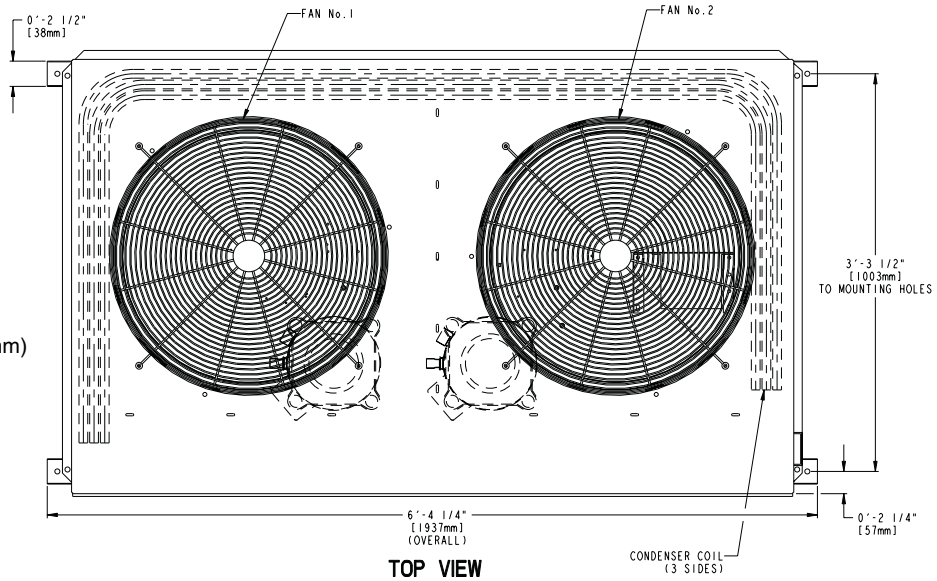

TOP VIEW

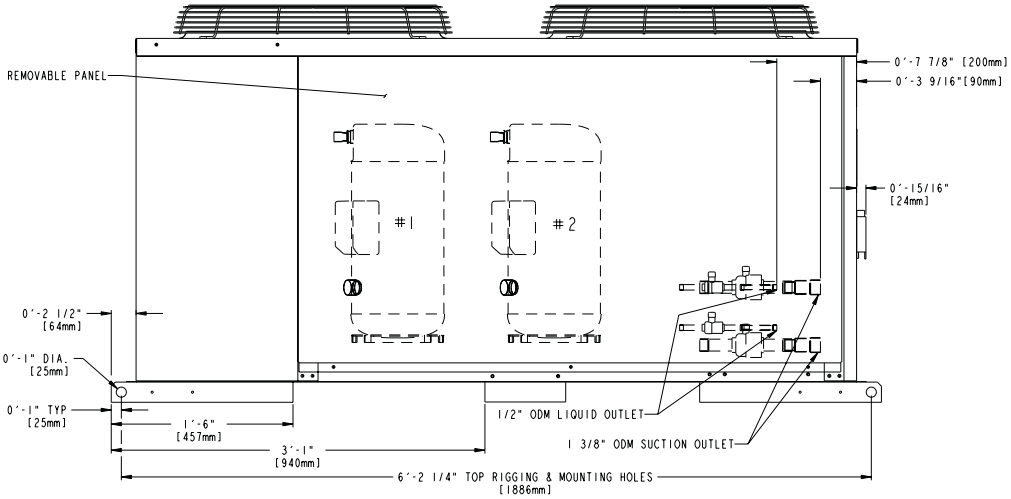

SIDE VIEW

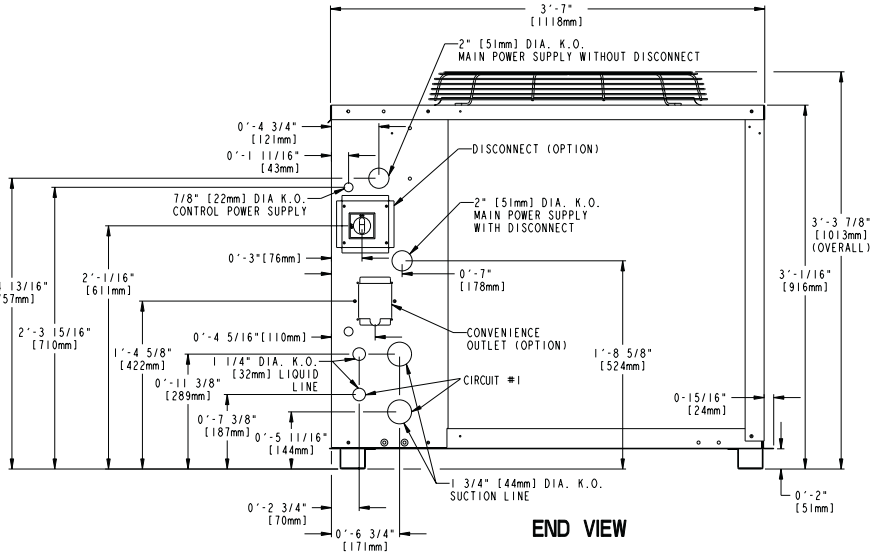

END VIEW

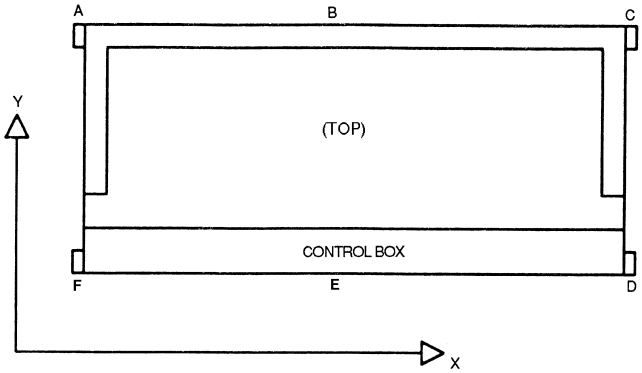

566D150-240

UNIT 566D	ALUMINUM COIL						
	Standard Weight (lb)	Operational Weight Points (lb)					
		A	B	C	D	E	F
150	779	70	177	68	100	261	103
180	789	70	180	69	101	265	104
240	900	84	234	82	108	310	111

UNIT 566D	CENTER OF GRAVITY (in.)	
	Aluminum Coil	
	X	Y
150	38	16
180	38	16
240	37	17

566E150-240

UNIT 566E	ALUMINUM COIL						
	Standard Weight (lb)	Operational Weight Points (lb)					
		A	B	C	D	E	F
150	676	84	168	72	78	183	91
180	740	86	186	71	82	216	99
240	764	87	192	72	85	226	102

UNIT 566E	CENTER OF GRAVITY (in.)	
	Aluminum Coil	
	X	Y
150	35	19
180	35	18
240	35	18

NOTES:
1. Corner weights are approximate.
2. Actual support weights depend on level of unit and evenness of support posts.
3. Total weights represent approximate unit weights without shipping package.
4. Bottom or top skid is NOT included in the weights.

566D150-240, 566E150-240

PERFORMANCE DATA

CONDENSING UNIT RATINGS

566D150

SST (F)		Air Temperature Entering Condenser (F)					
		80	85	95	100	105	115
25	TC	101.0	97.6	90.0	86.0	82.2	74.7
	kW	8.56	8.90	9.55	9.85	10.20	10.70
	SDT	94.6	99.4	109.0	114.0	119.0	129.0
30	TC	118.0	113.0	105.0	101.0	96.7	88.5
	kW	8.80	9.17	9.90	10.20	10.60	11.20
	SDT	96.6	101.0	111.0	116.0	121.0	131.0
35	TC	134.0	129.0	120.0	116.0	111.0	102.0
	kW	9.03	9.44	10.20	10.60	11.00	11.70
	SDT	98.6	103.0	113.0	117.0	122.0	132.0
40	TC	150.0	145.0	135.0	130.0	126.0	116.0
	kW	9.26	9.71	10.60	11.00	11.40	12.20
	SDT	101.0	105.0	115.0	119.0	124.0	134.0
45	TC	166.0	161.0	150.0	145.0	140.0	130.0
	kW	9.50	9.98	10.90	11.40	11.80	12.70
	SDT	103.0	107.0	116.0	121.0	126.0	135.0
50	TC	182.0	177.0	166.0	160.0	155.0	144.0
	kW	9.73	10.30	11.30	11.70	12.20	13.10
	SDT	105.0	109.0	118.0	123.0	127.0	136.0

566D180

SST (F)		Air Temperature Entering Condenser (F)					
		80	85	95	100	105	115
25	TC	139.0	134.0	126.0	121.0	117.0	108.0
	kW	12.30	12.70	13.60	14.00	14.40	15.10
	SDT	99.5	104.0	114.0	118.0	123.0	133.0
30	TC	159.0	154.0	144.0	139.0	134.0	125.0
	kW	12.90	13.40	14.30	14.70	15.20	16.00
	SDT	102.0	107.0	116.0	121.0	125.0	135.0
35	TC	179.0	173.0	163.0	157.0	152.0	142.0
	kW	13.50	14.00	15.00	15.50	16.00	16.90
	SDT	105.0	109.0	119.0	123.0	128.0	137.0
40	TC	198.0	192.0	181.0	175.0	170.0	158.0
	kW	14.00	14.60	15.70	16.30	16.80	17.80
	SDT	108.0	112.0	121.0	125.0	130.0	139.0
45	TC	218.0	212.0	199.0	193.0	187.0	175.0
	kW	14.60	15.20	16.50	17.00	17.60	18.70
	SDT	110.0	115.0	124.0	128.0	132.0	141.0
50	TC	237.0	231.0	218.0	211.0	205.0	192.0
	kW	15.20	15.90	17.20	17.80	18.40	19.60
	SDT	113.0	117.0	126.0	130.0	135.0	144.0

566D240

SST (F)		Air Temperature Entering Condenser (F)					
		80	85	95	100	105	115
25	TC	175.0	169.0	157.0	151.0	145.0	134.0
	kW	16.30	16.80	17.70	18.20	18.60	19.40
	SDT	104.0	108.0	117.0	122.0	126.0	135.0
30	TC	200.0	193.0	180.0	173.0	166.0	154.0
	kW	17.20	17.80	18.80	19.30	19.80	20.70
	SDT	107.0	111.0	120.0	125.0	129.0	138.0
35	TC	224.0	217.0	202.0	195.0	188.0	175.0
	kW	18.20	18.80	19.90	20.50	21.00	22.00
	SDT	110.0	115.0	123.0	128.0	132.0	141.0
40	TC	249.0	241.0	225.0	218.0	210.0	195.0
	kW	19.10	19.80	21.00	21.60	22.20	23.30
	SDT	114.0	118.0	126.0	131.0	135.0	144.0
45	TC	273.0	265.0	248.0	240.0	232.0	216.0
	kW	20.10	20.80	22.10	22.70	23.40	24.60
	SDT	117.0	121.0	129.0	134.0	138.0	146.0
50	TC	297.0	289.0	271.0	262.0	253.0	236.0
	kW	21.00	21.80	23.20	23.90	24.60	25.90
	SDT	120.0	124.0	132.0	137.0	141.0	149.0

LEGEND

kW — Compressor Power
SDT — Saturated Discharge Temperature at Compressor (F)
SST — Saturated Suction Temperature (F)
TC — Gross Cooling Capacity (1000 Btuh)

566E150

SST (F)		Air Temperature Entering Condenser (F)					
		80	85	95	100	105	115
20	TC	102.0	99.1	93.2	90.3	87.3	81.1
	kW	9.04	9.58	10.80	11.40	12.10	13.50
	SDT	103.0	108.0	118.0	123.0	128.0	138.0
25	TC	114.0	111.0	105.0	102.0	98.8	92.2
	kW	9.09	9.64	10.90	11.50	12.20	13.60
	SDT	103.0	108.0	118.0	123.0	128.0	138.0
30	TC	127.0	124.0	117.0	114.0	110.0	103.0
	kW	9.14	9.70	10.90	11.50	12.20	13.70
	SDT	103.0	108.0	118.0	123.0	128.0	138.0
35	TC	140.0	137.0	130.0	126.0	123.0	115.0
	kW	9.19	9.75	11.00	11.60	12.30	13.70
	SDT	103.0	108.0	118.0	123.0	128.0	138.0
40	TC	155.0	151.0	144.0	140.0	136.0	128.0
	kW	9.26	9.81	11.00	11.70	12.30	13.80
	SDT	103.0	108.0	118.0	123.0	128.0	138.0
45	TC	170.0	166.0	158.0	154.0	150.0	141.0
	kW	9.37	9.90	11.10	11.70	12.40	13.90
	SDT	103.0	108.0	118.0	123.0	128.0	138.0
50	TC	186.0	182.0	173.0	169.0	164.0	155.0
	kW	9.55	10.10	11.30	11.90	12.60	14.00
	SDT	104.0	109.0	119.0	124.0	129.0	139.0

566E180

SST (F)		Air Temperature Entering Condenser (F)					
		80	85	95	100	105	115
20	TC	141.0	137.0	129.0	124.0	120.0	110.0
	kW	12.01	12.60	13.70	14.30	14.90	16.10
	SDT	101.0	105.0	115.0	120.0	125.0	135.0
25	TC	156.0	152.0	143.0	138.0	133.0	123.0
	kW	12.40	12.90	14.00	14.60	15.20	16.40
	SDT	102.0	107.0	116.0	121.0	126.0	136.0
30	TC	171.0	166.0	157.0	152.0	147.0	136.0
	kW	12.70	13.20	14.30	14.90	15.50	16.70
	SDT	104.0	108.0	118.0	123.0	127.0	137.0
35	TC	187.0	182.0	172.0	166.0	161.0	150.0
	kW	13.10	13.60	14.70	15.30	15.90	17.10
	SDT	105.0	110.0	119.0	12.04	129.0	138.0
40	TC	203.0	198.0	187.0	181.0	176.0	164.0
	kW	13.50	14.00	15.10	15.70	16.30	17.50
	SDT	107.0	112.0	121.0	126.0	130.0	140.0
45	TC	221.0	215.0	204.0	198.0	192.0	179.0
	kW	13.90	14.50	15.60	16.10	16.70	17.90
	SDT	109.0	114.0	123.0	127.0	132.0	141.0
50	TC	239.0	233.0	221.0	215.0	208.0	195.0
	kW	14.40	14.90	16.10	16.70	17.20	18.40
	SDT	111.0	116.0	125.0	129.0	134.0	143.0

566E240

SST (F)		Air Temperature Entering Condenser (F)					
		80	85	95	100	105	115
20	TC	184.0	179.0	170.0	165.0	160.0	148.0
	kW	16.20	17.00	18.50	19.40	20.20	21.70
	SDT	105.0	110.0	119.0	124.0	129.0	139.0
25	TC	202.0	197.0	186.0	181.0	176.0	163.0
	kW	16.80	17.50	19.00	19.80	20.60	22.20
	SDT	107.0	112.0	121.0	126.0	131.0	140.0
30	TC	220.0	214.0	203.0	197.0	191.0	179.0
	kW	17.30	18.00	19.50	20.30	21.10	22.70
	SDT	109.0	113.0	123.0	127.0	132.0	141.0
35	TC	239.0	233.0	220.0	214.0	208.0	194.0
	kW	18.00	18.60	20.10	20.80	21.60	23.20
	SDT	111.0	116.0	125.0	129.0	134.0	143.0
40	TC	259.0	253.0	239.0	232.0	225.0	211.0
	kW	18.70	19.30	20.70	21.50	22.20	23.80
	SDT	113.0	118.0	127.0	131.0	136.0	145.0
45	TC	280.0	273.0	259.0	252.0	244.0	229.0
	kW	19.40	20.10	21.50	22.20	22.90	24.50
	SDT	116.0	120.0	129.0	134.0	138.0	147.0
50	TC	302.0	295.0	280.0	272.0	264.0	247.0
	kW	20.20	20.90	22.30	23.00	23.70	25.20
	SDT	118.0	123.0	132.0	136.0	140.0	149.0

PERFORMANCE DATA (cont)

COMBINATION RATINGS

UNIT 566D150

566D150/524A-C150 WITH HIGH CAPACITY 4-ROW COIL

Temp (F) Air Entering Condenser (Edb)		Evaporator Air — Cfm											
		3750				5000				6250			
		Evaporator Air — Ewb (F)											
		57	62	67	72	57	62	67	72	57	62	67	72
80	TC	133.0	139.0	151.0	165.0	146.0	147.0	158.0	172.0	154.0	154.0	163.0	177.0
	SHC	133.0	123.0	103.0	83.1	146.0	142.0	119.0	92.7	154.0	154.0	133.0	101.0
	kW	9.00	9.07	9.27	9.48	9.18	9.20	9.38	9.59	9.32	9.32	9.45	9.66
85	TC	131.0	136.0	148.0	161.0	143.0	144.0	155.0	169.0	152.0	151.0	160.0	173.0
	SHC	131.0	122.0	102.0	81.9	143.0	140.0	117.0	91.3	152.0	151.0	131.0	100.0
	kW	9.44	9.54	9.75	9.99	9.66	9.69	9.88	10.10	9.82	9.81	9.96	10.20
95	TC	126.0	130.0	142.0	155.0	138.0	138.0	148.0	161.0	146.0	146.0	153.0	165.0
	SHC	126.0	119.0	99.5	79.3	138.0	137.0	115.0	88.8	146.0	146.0	128.0	97.5
	kW	10.40	10.50	10.70	11.00	10.60	10.60	10.90	11.20	10.80	10.80	11.00	11.30
100	TC	123.0	127.0	138.0	151.0	135.0	135.0	145.0	157.0	143.0	143.0	149.0	161.0
	SHC	123.0	117.0	98.2	78.0	135.0	134.0	113.0	87.5	143.0	143.0	127.0	96.2
	kW	10.80	10.90	11.20	11.50	11.10	11.10	11.30	11.70	11.30	11.30	11.50	11.80
105	TC	121.0	124.0	135.0	148.0	132.0	132.0	141.0	154.0	140.0	140.0	145.0	157.0
	SHC	121.0	116.0	96.8	76.8	132.0	132.0	112.0	86.1	140.0	140.0	125.0	94.8
	kW	11.30	11.40	11.70	12.00	11.60	11.60	11.80	12.20	11.80	11.80	12.00	12.30
115	TC	116.0	118.0	129.0	141.0	127.0	127.0	134.0	146.0	134.0	134.0	138.0	149.0
	SHC	116.0	113.0	94.1	74.2	127.0	127.0	109.0	83.5	134.0	134.0	122.0	92.2
	kW	12.20	12.30	12.60	13.00	12.50	12.50	12.80	13.20	12.80	12.80	12.90	13.30

566D150/524A-B150 WITH STANDARD 3-ROW COIL

Temp (F) Air Entering Condenser (Edb)		Evaporator Air — Cfm											
		3750				5000				6250			
		Evaporator Air — Ewb (F)											
		57	62	67	72	57	62	67	72	57	62	67	72
80	TC	127.0	134.0	146.0	160.0	140.0	142.0	153.0	167.0	148.0	148.0	158.0	172.0
	SHC	127.0	118.0	99.4	80.2	140.0	136.0	114.0	89.0	148.0	148.0	126.0	96.9
	kW	8.93	9.01	9.19	9.40	9.09	9.12	9.31	9.51	9.22	9.22	9.37	9.58
85	TC	125.0	131.0	143.0	156.0	137.0	139.0	150.0	163.0	145.0	145.0	154.0	168.0
	SHC	125.0	117.0	98.2	78.9	137.0	134.0	112.0	87.6	145.0	145.0	125.0	95.6
	kW	9.37	9.45	9.67	9.90	9.55	9.58	9.79	10.00	9.70	9.71	9.87	10.10
95	TC	121.0	125.0	137.0	150.0	132.0	133.0	143.0	156.0	140.0	140.0	147.0	160.0
	SHC	121.0	114.0	95.6	76.4	132.0	130.0	110.0	85.1	140.0	140.0	122.0	93.0
	kW	10.30	10.30	10.60	10.90	10.50	10.50	10.70	11.00	10.70	10.70	10.80	11.10
100	TC	118.0	122.0	134.0	146.0	129.0	130.0	140.0	152.0	137.0	137.0	144.0	156.0
	SHC	118.0	112.0	94.3	75.2	129.0	128.0	108.0	83.8	137.0	137.0	121.0	91.7
	kW	10.70	10.80	11.10	11.40	11.00	11.00	11.20	11.60	11.20	11.20	11.30	11.70
105	TC	116.0	119.0	131.0	143.0	127.0	127.0	136.0	149.0	134.0	134.0	140.0	153.0
	SHC	116.0	111.0	92.9	73.9	127.0	126.0	107.0	82.5	134.0	134.0	119.0	90.4
	kW	11.20	11.20	11.50	11.90	11.40	11.40	11.70	12.10	11.60	11.60	11.80	12.20
115	TC	111.0	113.0	124.0	136.0	121.0	121.0	129.0	141.0	128.0	128.0	133.0	145.0
	SHC	111.0	108.0	90.3	71.4	121.0	121.0	104.0	79.9	128.0	128.0	116.0	87.8
	kW	12.00	12.10	12.50	12.90	12.40	12.40	12.60	13.10	12.60	12.60	12.80	13.20

LEGEND

Edb — Entering Dry Bulb
Ewb — Entering Wet Bulb
kW — Compressor Motor Power Input
SHC — Sensible Heat Capacity (1000 Btuh) Gross
TC — Total Capacity (1000 Btuh) Gross

PERFORMANCE DATA (cont)

COMBINATION RATINGS (cont)

UNIT 566D150 (cont)

566D150/524A-C180 WITH HIGH CAPACITY 4-ROW COIL

Temp (F) Air Entering Condenser (Edb)		Evaporator Air — Cfm											
		4500				6000				7500			
		Evaporator Air — Ewb (F)											
		57	62	67	72	57	62	67	72	57	62	67	72
80	TC	142.0	145.0	157.0	171.0	154.0	154.0	164.0	178.0	163.0	163.0	168.0	182.0
	SHC	142.0	136.0	114.0	89.6	154.0	154.0	131.0	100.0	163.0	163.0	146.0	110.0
	kW	9.13	9.17	9.37	9.57	9.31	9.32	9.47	9.66	9.44	9.45	9.53	9.72
85	TC	140.0	142.0	154.0	168.0	151.0	151.0	160.0	174.0	160.0	160.0	165.0	178.0
	SHC	140.0	134.0	112.0	88.3	151.0	151.0	129.0	99.1	160.0	160.0	145.0	109.0
	kW	9.60	9.65	9.86	10.10	9.81	9.81	9.97	10.20	9.96	9.96	10.00	10.30
95	TC	134.0	136.0	147.0	160.0	146.0	146.0	153.0	166.0	153.0	153.0	157.0	170.0
	SHC	134.0	131.0	109.0	85.7	146.0	146.0	127.0	96.4	153.0	153.0	142.0	106.0
	kW	10.50	10.60	10.80	11.20	10.80	10.80	11.00	11.30	11.00	11.00	11.10	11.40
100	TC	132.0	133.0	144.0	157.0	143.0	143.0	150.0	162.0	150.0	150.0	154.0	166.0
	SHC	132.0	129.0	108.0	84.4	143.0	143.0	125.0	95.1	150.0	150.0	140.0	105.0
	kW	11.00	11.10	11.30	11.70	11.30	11.30	11.50	11.80	11.50	11.50	11.60	11.90
105	TC	129.0	130.0	140.0	153.0	140.0	140.0	146.0	158.0	147.0	147.0	150.0	162.0
	SHC	129.0	127.0	107.0	83.1	140.0	140.0	124.0	93.8	147.0	147.0	138.0	104.0
	kW	11.50	11.50	11.80	12.20	11.80	11.80	12.00	12.30	12.00	12.00	12.10	12.40
115	TC	124.0	124.0	133.0	146.0	134.0	134.0	139.0	150.0	140.0	140.0	142.0	153.0
	SHC	124.0	123.0	104.0	80.5	134.0	134.0	121.0	91.0	140.0	140.0	135.0	101.0
	kW	12.40	12.50	12.80	13.20	12.80	12.80	13.00	13.40	13.00	13.00	13.10	13.50

566D150/524A-B180 WITH STANDARD 3-ROW COIL

Temp (F) Air Entering Condenser (Edb)		Evaporator Air — Cfm											
		4500				6000				7500			
		Evaporator Air — Ewb (F)											
		57	62	67	72	57	62	67	72	57	62	67	72
80	TC	140.0	144.0	156.0	170.0	152.0	152.0	162.0	176.0	160.0	160.0	167.0	181.0
	SHC	140.0	134.0	112.0	88.3	152.0	152.0	128.0	98.7	160.0	160.0	143.0	108.0
	kW	9.09	9.14	9.34	9.55	9.28	9.28	9.44	9.65	9.41	9.41	9.51	9.71
85	TC	137.0	140.0	152.0	166.0	149.0	149.0	159.0	172.0	157.0	157.0	163.0	176.0
	SHC	137.0	132.0	110.0	87.0	149.0	149.0	127.0	97.3	157.0	157.0	142.0	107.0
	kW	9.56	9.61	9.84	10.10	9.78	9.77	9.94	10.20	9.92	9.92	10.00	10.20
95	TC	132.0	134.0	146.0	159.0	143.0	143.0	151.0	165.0	151.0	151.0	155.0	168.0
	SHC	132.0	129.0	107.0	84.4	143.0	143.0	124.0	94.6	151.0	151.0	138.0	104.0
	kW	10.50	10.50	10.80	11.10	10.70	10.70	10.90	11.20	10.90	10.90	11.00	11.30
100	TC	130.0	131.0	142.0	155.0	140.0	140.0	148.0	161.0	148.0	148.0	152.0	164.0
	SHC	130.0	127.0	106.0	83.1	140.0	140.0	123.0	93.3	148.0	148.0	137.0	103.0
	kW	11.00	11.00	11.30	11.60	11.30	11.20	11.40	11.80	11.40	11.40	11.50	11.80
105	TC	127.0	128.0	139.0	151.0	137.0	137.0	144.0	157.0	145.0	145.0	148.0	160.0
	SHC	127.0	125.0	105.0	81.7	137.0	137.0	12.01	91.9	145.0	145.0	135.0	101.0
	kW	11.40	11.50	11.80	12.10	11.70	11.70	11.90	12.30	11.90	11.90	12.00	12.40
115	TC	121.0	122.0	131.0	144.0	131.0	131.0	136.0	148.0	138.0	138.0	140.0	152.0
	SHC	121.0	121.0	102.0	79.0	131.0	131.0	118.0	89.2	138.0	138.0	132.0	98.7
	kW	12.40	12.40	12.70	13.10	12.70	12.70	12.90	13.30	12.90	12.90	13.00	13.40

LEGEND

Edb — Entering Dry Bulb
Ewb — Entering Wet Bulb
kW — Compressor Motor Power Input
SHC — Sensible Heat Capacity (1000 Btuh) Gross
TC — Total Capacity (1000 Btuh) Gross

PERFORMANCE DATA (cont)

COMBINATION RATINGS (cont)

UNIT 566D180

566D180/524A-C180 WITH HIGH-CAPACITY 4-ROW COIL

Temp (F) Air Entering Condenser (Edb)		Evaporator Air — Cfm											
		4500				6000				7500			
		Evaporator Air — Ewb (F)											
		57	62	67	72	57	62	67	72	57	62	67	72
80	TC	167.0	177.0	192.0	209.0	183.0	187.0	202.0	219.0	194.0	195.0	208.0	225.0
	SHC	167.0	152.0	128.0	104.0	183.0	175.0	146.0	115.0	194.0	193.0	163.0	125.0
	kW	13.10	13.40	13.90	14.40	13.60	13.70	14.10	14.70	13.90	13.90	14.30	14.80
85	TC	165.0	174.0	189.0	205.0	180.0	184.0	198.0	214.0	191.0	192.0	204.0	220.0
	SHC	165.0	150.0	127.0	102.0	180.0	174.0	145.0	113.0	191.0	191.0	161.0	124.0
	kW	13.70	14.00	14.50	15.00	14.20	14.30	14.80	15.30	14.60	14.60	15.00	15.50
95	TC	160.0	167.0	182.0	197.0	174.0	177.0	190.0	206.0	185.0	185.0	196.0	211.0
	SHC	160.0	147.0	123.0	99.3	174.0	170.0	141.0	110.0	185.0	185.0	158.0	120.0
	kW	14.90	15.20	15.70	16.40	15.50	15.60	16.10	16.70	15.90	15.90	16.30	16.90
100	TC	157.0	164.0	178.0	193.0	171.0	173.0	186.0	202.0	181.0	181.0	191.0	207.0
	SHC	157.0	145.0	122.0	97.8	171.0	168.0	140.0	109.0	181.0	181.0	156.0	119.0
	kW	15.50	15.80	16.40	17.00	16.10	16.20	16.70	17.40	16.50	16.50	17.00	17.60
105	TC	154.0	160.0	174.0	189.0	168.0	169.0	182.0	197.0	178.0	178.0	187.0	202.0
	SHC	154.0	144.0	120.0	96.3	168.0	165.0	138.0	107.0	178.0	178.0	154.0	117.0
	kW	16.00	16.30	17.00	17.70	16.70	16.80	17.40	18.10	17.20	17.20	17.60	18.30
115	TC	148.0	153.0	166.0	181.0	162.0	162.0	174.0	188.0	171.0	171.0	178.0	193.0
	SHC	148.0	140.0	117.0	93.2	162.0	161.0	135.0	104.0	171.0	171.0	151.0	114.0
	kW	17.30	17.50	18.20	19.00	18.00	18.00	18.60	19.40	18.50	18.50	18.90	19.70

566D180/524A-B180 WITH STANDARD 3-ROW COIL

Temp (F) Air Entering Condenser (Edb)		Evaporator Air — Cfm											
		4500				6000				7500			
		Evaporator Air — Ewb (F)											
		57	62	67	72	57	62	67	72	57	62	67	72
80	TC	165.0	175.0	190.0	207.0	180.0	185.0	200.0	217.0	191.0	193.0	206.0	223.0
	SHC	165.0	149.0	126.0	102.0	180.0	172.0	143.0	113.0	191.0	190.0	159.0	123.0
	kW	13.00	13.30	13.80	14.30	13.50	13.60	14.10	14.60	13.80	13.90	14.30	14.80
85	TC	162.0	171.0	187.0	203.0	177.0	181.0	196.0	213.0	188.0	189.0	202.0	218.0
	SHC	162.0	148.0	125.0	101.0	177.0	170.0	142.0	112.0	188.0	187.0	158.0	121.0
	kW	13.60	13.90	14.40	15.00	14.10	14.20	14.70	15.30	14.50	14.50	14.90	15.50
95	TC	157.0	165.0	179.0	195.0	171.0	174.0	188.0	204.0	182.0	182.0	193.0	209.0
	SHC	157.0	144.0	121.0	97.9	171.0	166.0	139.0	108.0	182.0	181.0	154.0	118.0
	kW	14.80	15.10	15.70	16.30	15.30	15.50	16.00	16.60	15.80	15.80	16.20	16.90
100	TC	154.0	161.0	176.0	191.0	168.0	170.0	184.0	199.0	178.0	178.0	189.0	205.0
	SHC	154.0	143.0	120.0	96.3	168.0	164.0	137.0	107.0	178.0	178.0	153.0	117.0
	kW	15.30	15.70	16.30	17.00	16.00	16.10	16.70	17.30	16.40	16.40	16.90	17.50
105	TC	151.0	158.0	172.0	187.0	165.0	167.0	180.0	195.0	175.0	175.0	185.0	200.0
	SHC	151.0	141.0	118.0	94.8	165.0	162.0	135.0	105.0	175.0	175.0	151.0	115.0
	kW	15.90	16.20	16.90	17.60	16.60	16.70	17.30	18.00	17.00	17.00	17.50	18.20
115	TC	146.0	151.0	164.0	179.0	159.0	160.0	171.0	186.0	168.0	168.0	176.0	191.0
	SHC	146.0	137.0	115.0	91.7	159.0	157.0	132.0	102.0	168.0	168.0	147.0	112.0
	kW	17.10	17.40	18.10	18.90	17.80	17.90	18.50	19.30	18.30	18.30	18.80	19.50

LEGEND

Edb — Entering Dry Bulb
Ewb — Entering Wet Bulb
kW — Compressor Motor Power Input
SHC — Sensible Heat Capacity (1000 Btuh) Gross
TC — Total Capacity (1000 Btuh) Gross

PERFORMANCE DATA (cont)

COMBINATION RATINGS (cont)

UNIT 566D180 (cont)

566D180/524A-C240 WITH HIGH-CAPACITY 4-ROW COIL

Temp (F) Air Entering Condenser (Edb)		Evaporator Air — Cfm											
		6,000				8,000				10,000			
		Evaporator Air — Ewb (F)											
		57	62	67	72	57	62	67	72	57	62	67	72
80	TC	196.0	200.0	215.0	234.0	212.0	212.0	224.0	242.0	223.0	224.0	230.0	247.0
	SHC	196.0	188.0	156.0	123.0	212.0	212.0	181.0	138.0	223.0	224.0	203.0	152.0
	kW	13.90	14.00	14.50	15.00	14.40	14.40	14.70	15.20	14.70	14.70	14.90	15.30
85	TC	193.0	196.0	211.0	229.0	209.0	209.0	220.0	237.0	219.0	220.0	225.0	242.0
	SHC	193.0	186.0	154.0	121.0	209.0	209.0	179.0	136.0	219.0	220.0	201.0	151.0
	kW	14.60	14.70	15.20	15.70	15.10	15.10	15.40	16.00	15.40	15.40	15.60	16.10
95	TC	186.0	188.0	203.0	219.0	201.0	201.0	210.0	227.0	211.0	211.0	216.0	231.0
	SHC	186.0	182.0	151.0	118.0	201.0	201.0	175.0	133.0	211.0	211.0	197.0	147.0
	kW	15.90	16.00	16.50	17.10	16.50	16.50	16.80	17.40	16.80	16.80	17.00	17.60
100	TC	183.0	184.0	198.0	215.0	197.0	197.0	205.0	222.0	207.0	207.0	211.0	226.0
	SHC	183.0	179.0	149.0	116.0	197.0	197.0	173.0	131.0	207.0	207.0	195.0	146.0
	kW	16.50	16.60	17.20	17.90	17.20	17.10	17.50	18.10	17.60	17.50	17.70	18.30
105	TC	179.0	180.0	193.0	210.0	193.0	193.0	201.0	216.0	203.0	203.0	206.0	221.0
	SHC	179.0	177.0	147.0	114.0	193.0	193.0	171.0	129.0	203.0	203.0	192.0	144.0
	kW	17.20	17.20	17.80	18.60	17.80	17.80	18.20	18.90	18.30	18.30	18.40	19.00
115	TC	172.0	172.0	184.0	200.0	185.0	185.0	191.0	206.0	194.0	194.0	196.0	210.0
	SHC	172.0	172.0	144.0	111.0	185.0	185.0	168.0	126.0	194.0	194.0	188.0	140.0
	kW	18.50	18.50	19.10	20.00	19.20	19.20	19.50	20.30	19.70	19.70	19.80	20.50

566D180/524A-B240 WITH STANDARD 3-ROW COIL

Temp (F) Air Entering Condenser (Edb)		Evaporator Air — Cfm											
		6,000				8,000				10,000			
		Evaporator Air — Ewb (F)											
		57	62	67	72	57	62	67	72	57	62	67	72
80	TC	186.0	190.0	205.0	222.0	201.0	201.0	212.0	230.0	211.0	211.0	218.0	235.0
	SHC	186.0	178.0	148.0	117.0	201.0	201.0	171.0	130.0	211.0	211.0	190.0	143.0
	kW	13.70	13.80	14.20	14.70	14.10	14.10	14.50	15.00	14.40	14.40	14.60	15.10
85	TC	183.0	186.0	200.0	217.0	197.0	197.0	208.0	225.0	207.0	207.0	213.0	230.0
	SHC	183.0	176.0	147.0	115.0	197.0	197.0	169.0	129.0	207.0	207.0	188.0	142.0
	kW	14.30	14.40	14.90	15.40	14.80	14.80	15.10	15.70	15.10	15.10	15.30	15.80
95	TC	176.0	179.0	192.0	208.0	190.0	190.0	199.0	215.0	199.0	199.0	204.0	220.0
	SHC	176.0	172.0	143.0	112.0	190.0	190.0	165.0	125.0	199.0	199.0	184.0	138.0
	kW	15.50	15.60	16.20	16.80	16.10	16.10	16.50	17.10	16.50	16.50	16.70	17.30
100	TC	173.0	175.0	188.0	204.0	186.0	186.0	195.0	211.0	195.0	195.0	200.0	215.0
	SHC	173.0	170.0	142.0	110.0	186.0	186.0	163.0	124.0	195.0	195.0	182.0	137.0
	kW	16.20	16.20	16.80	17.50	16.80	16.70	17.10	17.80	17.10	17.10	17.30	18.00
105	TC	170.0	171.0	184.0	199.0	183.0	183.0	190.0	206.0	191.0	191.0	195.0	210.0
	SHC	170.0	167.0	140.0	108.0	183.0	183.0	162.0	122.0	191.0	191.0	180.0	135.0
	kW	16.80	16.90	17.50	18.20	17.40	17.40	17.80	18.50	17.80	17.80	18.00	18.70
115	TC	163.0	164.0	175.0	190.0	175.0	175.0	181.0	196.0	183.0	183.0	186.0	199.0
	SHC	163.0	163.0	136.0	105.0	175.0	175.0	158.0	119.0	183.0	183.0	175.0	132.0
	kW	18.10	18.10	18.70	19.50	18.70	18.70	19.10	19.80	19.20	19.10	19.30	20.00

LEGEND

Edb — Entering Dry Bulb
Ewb — Entering Wet Bulb
kW — Compressor Motor Power Input
SHC — Sensible Heat Capacity (1000 Btuh) Gross
TC — Total Capacity (1000 Btuh) Gross

PERFORMANCE DATA (cont)

COMBINATION RATINGS (cont)

UNIT 566D240

566D240/524A-C300 WITH HIGH-CAPACITY 4-ROW COIL

Temp (F) Air Entering Condenser (Edb)		Evaporator Air — Cfm											
		7,500				10,000				12,500			
		Evaporator Air — Ewb (F)											
		57	62	67	72	57	62	67	72	57	62	67	72
80	TC	244.0	249.0	268.0	291.0	264.0	264.0	279.0	301.0	278.0	278.0	286.0	307.0
	SHC	244.0	233.0	194.0	152.0	264.0	264.0	224.0	171.0	278.0	278.0	252.0	189.0
	kW	18.90	19.20	19.90	20.80	19.70	19.70	20.30	21.20	20.30	20.30	20.60	21.40
85	TC	239.0	244.0	263.0	284.0	259.0	259.0	273.0	294.0	272.0	272.0	280.0	300.0
	SHC	239.0	231.0	192.0	150.0	259.0	259.0	222.0	169.0	272.0	272.0	249.0	187.0
	kW	19.70	19.90	20.70	21.60	20.50	20.50	21.10	22.00	21.10	21.10	21.40	22.30
95	TC	230.0	233.0	251.0	272.0	249.0	249.0	260.0	281.0	261.0	261.0	267.0	286.0
	SHC	230.0	225.0	187.0	146.0	249.0	249.0	217.0	164.0	261.0	261.0	243.0	182.0
	kW	21.30	21.40	22.20	23.20	22.10	22.10	22.70	23.70	22.70	22.70	23.00	23.90
100	TC	226.0	228.0	245.0	265.0	244.0	244.0	254.0	274.0	256.0	256.0	260.0	279.0
	SHC	226.0	222.0	184.0	143.0	244.0	244.0	214.0	162.0	256.0	256.0	240.0	180.0
	kW	22.00	22.10	23.00	24.00	22.90	22.90	23.50	24.50	23.60	23.60	23.80	24.80
105	TC	221.0	222.0	239.0	259.0	238.0	238.0	247.0	267.0	250.0	250.0	254.0	272.0
	SHC	221.0	219.0	182.0	141.0	238.0	238.0	212.0	160.0	250.0	250.0	237.0	177.0
	kW	22.80	22.80	23.70	24.80	23.70	23.70	24.20	25.30	24.40	24.40	24.60	25.60
115	TC	212.0	212.0	226.0	245.0	227.0	227.0	235.0	253.0	238.0	238.0	240.0	257.0
	SHC	212.0	211.0	177.0	136.0	227.0	227.0	206.0	155.0	238.0	238.0	231.0	172.0
	kW	24.30	24.30	25.20	26.40	25.30	25.30	25.80	26.90	26.00	26.00	26.10	27.20

566D240/524A-B300 WITH STANDARD 3-ROW COIL

Temp (F) Air Entering Condenser (Edb)		Evaporator Air — Cfm											
		7,500				10,000				12,500			
		Evaporator Air — Ewb (F)											
		57	62	67	72	57	62	67	72	57	62	67	72
80	TC	230.0	236.0	255.0	277.0	249.0	249.0	266.0	287.0	262.0	262.0	272.0	293.0
	SHC	230.0	219.0	183.0	144.0	249.0	248.0	209.0	161.0	262.0	262.0	233.0	176.0
	kW	18.40	18.60	19.40	20.20	19.10	19.20	19.80	20.60	19.60	19.60	20.10	20.90
85	TC	226.0	231.0	250.0	271.0	244.0	244.0	259.0	281.0	256.0	256.0	266.0	287.0
	SHC	226.0	217.0	181.0	142.0	244.0	244.0	207.0	159.0	256.0	256.0	231.0	174.0
	kW	19.20	19.40	20.20	21.00	19.90	19.90	20.60	21.50	20.40	20.40	20.80	21.70
95	TC	218.0	221.0	239.0	259.0	235.0	235.0	248.0	268.0	246.0	246.0	254.0	273.0
	SHC	218.0	211.0	176.0	138.0	235.0	235.0	203.0	154.0	246.0	246.0	226.0	169.0
	kW	20.60	20.80	21.70	22.60	21.50	21.50	22.10	23.10	22.00	22.00	22.40	23.30
100	TC	214.0	217.0	233.0	253.0	230.0	230.0	242.0	261.0	241.0	241.0	248.0	266.0
	SHC	214.0	208.0	174.0	136.0	230.0	230.0	200.0	152.0	241.0	241.0	223.0	167.0
	kW	21.40	21.50	22.40	23.40	22.20	22.20	22.90	23.80	22.80	22.80	23.20	24.10
105	TC	209.0	212.0	228.0	247.0	225.0	225.0	236.0	255.0	236.0	236.0	242.0	260.0
	SHC	209.0	206.0	172.0	133.0	225.0	225.0	198.0	150.0	236.0	236.0	220.0	165.0
	kW	22.10	22.20	23.10	24.20	23.00	23.00	23.60	24.60	23.60	23.60	23.90	24.90
115	TC	201.0	202.0	216.0	235.0	215.0	215.0	224.0	242.0	226.0	226.0	229.0	246.0
	SHC	201.0	199.0	167.0	129.0	215.0	215.0	193.0	145.0	226.0	226.0	214.0	160.0
	kW	23.60	23.70	24.60	25.80	24.60	24.50	25.10	26.20	25.20	25.20	25.40	26.50

LEGEND

Edb — Entering Dry Bulb
Ewb — Entering Wet Bulb
kW — Compressor Motor Power Input
SHC — Sensible Heat Capacity (1000 Btuh) Gross
TC — Total Capacity (1000 Btuh) Gross

PERFORMANCE DATA (cont)

COMBINATION RATINGS (cont)

UNIT 566E150

566E150/524A-C120 WITH HIGH-CAPACITY 4-ROW COIL

Temp (F) Air Entering Condenser (Edb)		Evaporator Air — Cfm											
		3000				4000				5000			
		Evaporator Air — Ewb (F)											
		57	62	67	72	57	62	67	72	57	62	67	72
80	TC	126.0	135.0	148.0	161.0	140.0	144.0	156.0	170.0	149.0	151.0	162.0	176.0
	SHC	126.0	112.0	95.4	78.5	140.0	130.0	109.0	87.0	149.0	146.0	122.0	94.8
	kW	9.13	9.18	9.22	9.31	9.19	9.20	9.26	9.37	9.22	9.23	9.30	9.43
85	TC	125.0	133.0	146.0	159.0	138.0	142.0	154.0	168.0	147.0	148.0	159.0	173.0
	SHC	125.0	111.0	94.5	77.5	138.0	129.0	108.0	86.0	147.0	144.0	121.0	93.8
	kW	9.68	9.72	9.79	9.87	9.74	9.77	9.82	9.92	9.78	9.80	9.85	9.98
95	TC	121.0	129.0	141.0	154.0	134.0	137.0	149.0	162.0	143.0	144.0	154.0	167.0
	SHC	121.0	109.0	92.4	75.6	134.0	127.0	106.0	84.0	143.0	141.0	118.0	91.8
	kW	10.90	11.00	11.00	11.10	11.00	11.00	11.00	11.10	11.00	11.00	11.10	11.20
100	TC	119.0	127.0	138.0	151.0	132.0	135.0	146.0	159.0	141.0	141.0	151.0	164.0
	SHC	119.0	108.0	91.4	74.6	132.0	126.0	105.0	82.9	141.0	140.0	117.0	90.7
	kW	11.60	11.60	11.70	11.70	11.60	11.60	11.70	11.80	11.60	11.70	11.70	11.80
105	TC	118.0	124.0	136.0	149.0	130.0	132.0	143.0	156.0	138.0	139.0	148.0	161.0
	SHC	118.0	107.0	90.3	73.5	130.0	124.0	104.0	81.9	138.0	138.0	116.0	89.6
	kW	12.30	12.30	12.40	12.40	12.30	12.30	12.40	12.50	12.30	12.40	12.40	12.50
115	TC	114.0	120.0	131.0	143.0	126.0	127.0	137.0	150.0	134.0	134.0	142.0	154.0
	SHC	114.0	104.0	88.0	71.4	126.0	122.0	101.0	79.6	134.0	134.0	114.0	87.4
	kW	13.70	13.80	13.80	13.90	13.80	13.80	13.80	13.90	13.80	13.80	13.90	14.00

566E150/524A-B120 WITH STANDARD 3-ROW COIL

Temp (F) Air Entering Condenser (Edb)		Evaporator Air — Cfm											
		3000				4000				5000			
		Evaporator Air — Ewb (F)											
		57	62	67	72	57	62	67	72	57	62	67	72
80	TC	119.0	128.0	140.0	153.0	131.0	136.0	148.0	161.0	140.0	142.0	153.0	166.0
	SHC	119.0	106.0	90.4	74.3	131.0	122.0	103.0	82.0	140.0	136.0	114.0	89.0
	kW	9.09	9.15	9.18	9.23	9.15	9.16	9.21	9.30	9.19	9.19	9.25	9.33
85	TC	118.0	126.0	138.0	151.0	130.0	134.0	146.0	159.0	138.0	140.0	151.0	164.0
	SHC	118.0	105.0	89.5	73.4	130.0	121.0	102.0	81.2	138.0	135.0	113.0	88.1
	kW	9.66	9.72	9.75	9.81	9.72	9.72	9.77	9.87	9.75	9.75	9.80	9.89
95	TC	115.0	122.0	134.0	146.0	126.0	130.0	141.0	154.0	134.0	136.0	146.0	158.0
	SHC	115.0	103.0	87.7	71.7	126.0	119.0	99.9	79.3	134.0	132.0	111.0	86.3
	kW	10.90	10.90	11.00	11.00	10.90	10.90	11.00	11.10	11.00	11.00	11.00	11.10
100	TC	113.0	120.0	131.0	144.0	124.0	128.0	139.0	151.0	132.0	133.0	143.0	156.0
	SHC	113.0	102.0	86.7	70.8	124.0	118.0	98.9	78.4	132.0	131.0	110.0	85.3
	kW	11.60	11.60	11.60	11.70	11.60	11.60	11.60	11.70	11.60	11.60	11.70	11.80
105	TC	111.0	118.0	129.0	141.0	122.0	125.0	136.0	148.0	130.0	131.0	140.0	153.0
	SHC	111.0	101.0	85.7	69.8	122.0	117.0	97.9	77.5	130.0	129.0	109.0	84.3
	kW	12.20	12.30	12.30	12.40	12.30	12.30	12.30	12.40	12.30	12.30	12.40	12.40
115	TC	108.0	114.0	124.0	136.0	118.0	121.0	131.0	143.0	126.0	126.0	135.0	147.0
	SHC	108.0	99.0	83.7	67.8	118.0	114.0	95.8	75.4	126.0	126.0	107.0	82.3
	kW	13.70	13.70	13.80	13.90	13.70	13.80	13.80	13.90	13.80	13.80	13.80	13.90

LEGEND

Edb — Entering Dry Bulb
Ewb — Entering Wet Bulb
kW — Compressor Motor Power Input
SHC — Sensible Heat Capacity (1000 Btuh) Gross
TC — Total Capacity (1000 Btuh) Gross

PERFORMANCE DATA (cont)

COMBINATION RATINGS (cont)

UNIT 566E150 (cont)

566E150/524A-C150 WITH HIGH-CAPACITY 4-ROW COIL

Temp (F) Air Entering Condenser (Edb)		Evaporator Air — Cfm											
		3750				5000				6250			
		Evaporator Air — Ewb (F)											
		57	62	67	72	57	62	67	72	57	62	67	72
80	TC	139.0	145.0	158.0	172.0	152.0	154.0	165.0	180.0	161.0	161.0	170.0	185.0
	SHC	139.0	127.0	107.0	86.2	152.0	148.0	123.0	96.1	161.0	161.0	138.0	105.0
	kW	9.18	9.21	9.27	9.38	9.25	9.24	9.33	9.48	9.29	9.31	9.37	9.54
85	TC	137.0	143.0	155.0	169.0	150.0	151.0	163.0	177.0	159.0	159.0	168.0	182.0
	SHC	137.0	126.0	106.0	85.3	150.0	146.0	122.0	95.1	159.0	159.0	137.0	104.0
	kW	9.74	9.76	9.84	9.95	9.80	9.82	9.90	10.00	9.86	9.87	9.93	10.10
95	TC	133.0	138.0	150.0	164.0	146.0	147.0	157.0	171.0	154.0	154.0	162.0	175.0
	SHC	133.0	124.0	104.0	83.3	146.0	144.0	120.0	93.1	154.0	154.0	134.0	102.0
	kW	11.00	11.00	11.10	11.20	11.00	11.00	11.10	11.20	11.10	11.10	11.10	11.30
100	TC	131.0	136.0	148.0	161.0	143.0	144.0	154.0	168.0	152.0	152.0	159.0	172.0
	SHC	131.0	123.0	103.0	82.2	143.0	142.0	119.0	92.1	152.0	152.0	133.0	101.0
	kW	11.60	11.60	11.70	11.80	11.70	11.70	11.80	11.90	11.70	11.70	11.80	11.90
105	TC	129.0	133.0	145.0	158.0	141.0	142.0	152.0	165.0	149.0	149.0	156.0	169.0
	SHC	129.0	121.0	102.0	81.1	141.0	140.0	118.0	90.9	149.0	149.0	132.0	100.0
	kW	12.30	12.30	12.40	12.50	12.40	12.40	12.50	12.60	12.40	12.40	12.50	12.60
115	TC	125.0	128.0	139.0	152.0	136.0	136.0	145.0	158.0	144.0	144.0	150.0	162.0
	SHC	125.0	119.0	99.4	78.9	136.0	136.0	115.0	88.7	144.0	144.0	129.0	97.9
	kW	13.80	13.80	13.90	14.00	13.80	13.90	13.90	14.00	13.90	13.90	13.90	14.10

566E150/524A-B150 WITH STANDARD 3-ROW COIL

Temp (F) Air Entering Condenser (Edb)		Evaporator Air — Cfm											
		3750				5000				6250			
		Evaporator Air — Ewb (F)											
		57	62	67	72	57	62	67	72	57	62	67	72
80	TC	130.0	137.0	150.0	163.0	143.0	145.0	157.0	171.0	151.0	151.0	162.0	176.0
	SHC	130.0	120.0	101.0	81.6	143.0	138.0	115.0	90.5	151.0	151.0	128.0	98.5
	kW	9.14	9.18	9.22	9.32	9.20	9.20	9.27	9.38	9.24	9.23	9.30	9.43
85	TC	129.0	135.0	147.0	161.0	141.0	143.0	154.0	168.0	149.0	149.0	159.0	173.0
	SHC	129.0	119.0	100.0	80.7	141.0	137.0	114.0	89.5	149.0	149.0	127.0	97.5
	kW	9.70	9.73	9.78	9.88	9.76	9.76	9.82	9.93	9.79	9.79	9.85	9.98
95	TC	125.0	131.0	143.0	156.0	137.0	138.0	149.0	162.0	145.0	145.0	154.0	167.0
	SHC	125.0	117.0	98.0	78.7	137.0	134.0	112.0	87.5	145.0	145.0	125.0	95.6
	kW	10.90	11.00	11.00	11.10	11.00	11.00	11.00	11.10	11.00	11.00	11.10	11.20
100	TC	123.0	128.0	140.0	153.0	135.0	136.0	146.0	160.0	143.0	143.0	151.0	164.0
	SHC	123.0	115.0	97.0	77.7	135.0	132.0	111.0	86.5	143.0	143.0	124.0	94.5
	kW	11.60	11.60	11.70	11.70	11.60	11.70	11.70	11.80	11.70	11.70	11.70	11.80
105	TC	122.0	126.0	137.0	150.0	132.0	133.0	144.0	157.0	140.0	140.0	148.0	161.0
	SHC	122.0	114.0	95.9	76.7	132.0	131.0	110.0	85.4	140.0	140.0	123.0	93.5
	kW	12.30	12.30	12.30	12.40	12.30	12.30	12.40	12.50	12.30	12.40	12.40	12.50
115	TC	118.0	121.0	132.0	144.0	128.0	128.0	138.0	150.0	135.0	135.0	142.0	154.0
	SHC	118.0	112.0	93.6	74.5	128.0	128.0	108.0	83.3	135.0	135.0	120.0	91.3
	kW	13.80	13.80	13.80	13.90	13.80	13.80	13.90	14.00	13.80	13.80	13.90	14.00

LEGEND

Edb — Entering Dry Bulb
Ewb — Entering Wet Bulb
kW — Compressor Motor Power Input
SHC — Sensible Heat Capacity (1000 Btuh) Gross
TC — Total Capacity (1000 Btuh) Gross

PERFORMANCE DATA (cont)

COMBINATION RATINGS (cont)

UNIT 566E150 (cont)

566E150/524A-C180 WITH HIGH-CAPACITY 4-ROW COIL

Temp (F) Air Entering Condenser (Edb)		Evaporator Air — Cfm											
		4500				6000				7500			
		Evaporator Air — Ewb (F)											
		57	62	67	72	57	62	67	72	57	62	67	72
80	TC	152.0	156.0	169.0	183.0	166.0	166.0	176.0	190.0	175.0	175.0	181.0	195.0
	SHC	152.0	145.0	121.0	95.4	166.0	166.0	140.0	107.0	175.0	175.0	157.0	119.0
	kW	9.24	9.26	9.35	9.53	9.33	9.33	9.43	9.63	9.42	9.43	9.49	9.69
85	TC	150.0	154.0	166.0	181.0	164.0	164.0	173.0	187.0	173.0	173.0	178.0	191.0
	SHC	150.0	144.0	120.0	94.4	164.0	164.0	139.0	106.0	173.0	173.0	156.0	118.0
	kW	9.80	9.82	9.92	10.10	9.89	9.89	9.99	10.20	9.98	9.99	10.00	10.20
95	TC	146.0	148.0	161.0	175.0	159.0	159.0	167.0	181.0	167.0	167.0	172.0	185.0
	SHC	146.0	141.0	117.0	92.2	159.0	159.0	136.0	104.0	167.0	167.0	154.0	115.0
	kW	11.00	11.10	11.10	11.30	11.10	11.10	11.20	11.40	11.20	11.20	11.20	11.40
100	TC	144.0	146.0	158.0	171.0	156.0	156.0	164.0	178.0	165.0	165.0	169.0	181.0
	SHC	144.0	140.0	116.0	91.1	156.0	156.0	135.0	103.0	165.0	165.0	152.0	114.0
	kW	11.70	11.70	11.80	11.90	11.80	11.80	11.90	12.00	11.80	11.90	11.90	12.10
105	TC	141.0	143.0	155.0	168.0	154.0	154.0	161.0	174.0	162.0	162.0	165.0	178.0
	SHC	141.0	138.0	115.0	90.0	154.0	154.0	134.0	102.0	162.0	162.0	151.0	113.0
	kW	12.40	12.40	12.50	12.60	12.50	12.50	12.50	12.70	12.50	12.50	12.60	12.80
115	TC	137.0	138.0	148.0	162.0	148.0	148.0	154.0	167.0	156.0	156.0	159.0	170.0
	SHC	137.0	135.0	112.0	87.6	148.0	148.0	131.0	99.5	156.0	156.0	148.0	111.0
	kW	13.90	13.90	13.90	14.10	13.90	14.00	14.00	14.20	14.00	14.00	14.00	14.20

566E150/524A-B180 WITH STANDARD 3-ROW COIL

Temp (F) Air Entering Condenser (Edb)		Evaporator Air — Cfm											
		4500				6000				7500			
		Evaporator Air — Ewb (F)											
		57	62	67	72	57	62	67	72	57	62	67	72
80	TC	143.0	147.0	160.0	174.0	155.0	156.0	166.0	180.0	164.0	164.0	171.0	185.0
	SHC	143.0	136.0	113.0	89.9	155.0	155.0	130.0	100.0	164.0	164.0	146.0	110.0
	kW	9.19	9.22	9.28	9.42	9.27	9.26	9.34	9.49	9.31	9.33	9.37	9.54
85	TC	141.0	145.0	157.0	171.0	153.0	153.0	164.0	178.0	162.0	162.0	168.0	182.0
	SHC	141.0	134.0	112.0	89.0	153.0	153.0	129.0	99.5	162.0	162.0	144.0	109.0
	kW	9.75	9.77	9.85	9.98	9.82	9.82	9.90	10.00	9.87	9.89	9.93	10.10
95	TC	137.0	140.0	152.0	165.0	149.0	149.0	158.0	172.0	157.0	157.0	162.0	175.0
	SHC	137.0	132.0	110.0	86.9	149.0	149.0	127.0	97.4	157.0	157.0	142.0	107.0
	kW	11.00	11.00	11.10	11.20	11.00	11.00	11.10	11.20	11.10	11.10	11.10	11.30
100	TC	135.0	138.0	149.0	162.0	146.0	146.0	155.0	168.0	154.0	154.0	159.0	172.0
	SHC	135.0	131.0	109.0	85.8	146.0	146.0	126.0	96.3	154.0	154.0	141.0	106.0
	kW	11.60	11.60	11.70	11.80	11.70	11.70	11.80	11.90	11.70	11.80	11.80	11.90
105	TC	133.0	135.0	146.0	159.0	144.0	144.0	152.0	165.0	152.0	152.0	156.0	169.0
	SHC	133.0	129.0	108.0	84.7	144.0	144.0	125.0	95.2	152.0	152.0	139.0	105.0
	kW	12.30	12.30	12.40	12.50	12.40	12.40	12.50	12.60	12.40	12.50	12.50	12.60
115	TC	129.0	130.0	140.0	153.0	139.0	139.0	146.0	158.0	146.0	146.0	150.0	162.0
	SHC	129.0	126.0	106.0	82.5	139.0	139.0	122.0	92.9	146.0	146.0	137.0	103.0
	kW	13.80	13.80	13.90	14.00	13.90	13.90	13.90	14.10	13.90	13.90	13.90	14.10

LEGEND

Edb — Entering Dry Bulb
Ewb — Entering Wet Bulb
kW — Compressor Motor Power Input
SHC — Sensible Heat Capacity (1000 Btuh) Gross
TC — Total Capacity (1000 Btuh) Gross

PERFORMANCE DATA (cont)

COMBINATION RATINGS (cont)

UNIT 566E180

566E180/524A-C150 WITH HIGH-CAPACITY 4-ROW COIL

Temp (F) Air Entering Condenser (Edb)		Evaporator Air — Cfm											
		3750				5000				6250			
		Evaporator Air — Ewb (F)											
		57	62	67	72	57	62	67	72	57	62	67	72
80	TC	163.0	175.0	190.0	206.0	179.0	186.0	201.0	217.0	191.0	194.0	208.0	224.0
	SHC	161.0	142.0	121.0	99.8	179.0	164.0	138.0	110.0	191.0	184.0	153.0	119.0
	kW	12.60	12.80	13.20	13.60	12.90	13.10	13.40	13.80	13.20	13.30	13.60	14.00
85	TC	160.0	172.0	187.0	203.0	176.0	183.0	198.0	214.0	188.0	190.0	204.0	220.0
	SHC	159.0	141.0	120.0	98.5	176.0	163.0	136.0	109.0	188.0	182.0	151.0	118.0
	kW	13.10	13.40	13.80	14.20	13.50	13.70	14.00	14.40	13.80	13.80	14.20	14.60
95	TC	155.0	166.0	180.0	196.0	170.0	176.0	190.0	206.0	181.0	183.0	196.0	212.0
	SHC	155.0	138.0	117.0	95.6	170.0	159.0	133.0	106.0	181.0	178.0	148.0	115.0
	kW	14.30	14.60	15.00	15.40	14.70	14.80	15.20	15.70	15.00	15.00	15.40	15.80
100	TC	152.0	163.0	177.0	192.0	167.0	172.0	186.0	201.0	178.0	180.0	192.0	208.0
	SHC	152.0	136.0	115.0	94.0	167.0	158.0	131.0	104.0	178.0	176.0	146.0	113.0
	kW	14.90	15.20	15.60	16.00	15.30	15.50	15.80	16.30	15.60	15.60	16.00	16.50
105	TC	150.0	159.0	173.0	188.0	164.0	168.0	182.0	197.0	175.0	176.0	188.0	203.0
	SHC	150.0	134.0	114.0	92.4	164.0	156.0	130.0	102.0	175.0	173.0	145.0	112.0
	kW	15.60	15.80	16.20	16.60	16.00	16.10	16.50	16.90	16.30	16.30	16.60	17.10
115	TC	144.0	152.0	165.0	179.0	158.0	161.0	173.0	188.0	168.0	168.0	178.0	193.0
	SHC	144.0	131.0	110.0	89.1	158.0	152.0	126.0	99.0	168.0	167.0	141.0	108.0
	kW	16.90	17.10	17.50	18.00	17.30	17.40	17.80	18.20	17.60	17.60	17.90	18.40

566E180/524A-B150 WITH STANDARD 3-ROW COIL

Temp (F) Air Entering Condenser (Edb)		Evaporator Air — Cfm											
		3750				5000				6250			
		Evaporator Air — Ewb (F)											
		57	62	67	72	57	62	67	72	57	62	67	72
80	TC	154.0	166.0	181.0	196.0	168.0	176.0	191.0	206.0	179.0	183.0	197.0	213.0
	SHC	152.0	134.0	115.0	94.7	168.0	154.0	129.0	104.0	179.0	171.0	143.0	112.0
	kW	12.40	12.60	13.00	13.30	12.70	12.90	13.20	13.60	12.90	13.00	13.40	13.70
85	TC	152.0	163.0	178.0	193.0	166.0	173.0	188.0	203.0	176.0	180.0	194.0	210.0
	SHC	150.0	133.0	113.0	93.4	166.0	153.0	128.0	102.0	176.0	169.0	141.0	111.0
	kW	12.90	13.20	13.50	13.90	13.20	13.40	13.80	14.20	13.50	13.60	13.90	14.30
95	TC	147.0	157.0	171.0	186.0	160.0	167.0	180.0	196.0	171.0	173.0	187.0	202.0
	SHC	146.0	130.0	111.0	90.6	160.0	149.0	125.0	99.7	171.0	166.0	138.0	108.0
	kW	14.10	14.40	14.70	15.10	14.40	14.60	15.00	15.40	14.70	14.80	15.10	15.50
100	TC	144.0	154.0	168.0	182.0	158.0	163.0	177.0	191.0	167.0	170.0	182.0	197.0
	SHC	144.0	128.0	109.0	89.1	158.0	148.0	123.0	98.1	167.0	163.0	137.0	106.0
	kW	14.80	15.00	15.30	15.70	15.10	15.20	15.60	16.00	15.30	15.40	15.70	16.20
105	TC	141.0	151.0	164.0	179.0	155.0	160.0	173.0	187.0	164.0	166.0	178.0	193.0
	SHC	141.0	127.0	107.0	87.6	155.0	146.0	122.0	96.5	164.0	161.0	135.0	105.0
	kW	15.40	15.60	16.00	16.40	15.70	15.80	16.20	16.60	16.00	16.00	16.40	16.80
115	TC	136.0	144.0	157.0	170.0	149.0	152.0	165.0	178.0	158.0	159.0	170.0	183.0
	SHC	136.0	124.0	104.0	84.4	149.0	142.0	118.0	93.3	158.0	156.0	132.0	101.0
	kW	16.80	16.90	17.30	17.70	17.10	17.20	17.50	17.90	17.30	17.30	17.70	18.10

LEGEND

Edb — Entering Dry Bulb
Ewb — Entering Wet Bulb
kW — Compressor Motor Power Input
SHC — Sensible Heat Capacity (1000 Btuh) Gross
TC — Total Capacity (1000 Btuh) Gross

PERFORMANCE DATA (cont)

COMBINATION RATINGS (cont)

UNIT 566E180 (cont)

566E180/524A-C180 WITH HIGH-CAPACITY 4-ROW COIL

Temp (F) Air Entering Condenser (Edb)		Evaporator Air — Cfm											
		4500				6000				7500			
		Evaporator Air — Ewb (F)											
		57	62	67	72	57	62	67	72	57	62	67	72
80	TC	180.0	190.0	206.0	223.0	197.0	201.0	216.0	233.0	209.0	210.0	222.0	239.0
	SHC	180.0	162.0	136.0	110.0	197.0	188.0	156.0	122.0	209.0	208.0	174.0	134.0
	kW	12.90	13.20	13.60	14.00	13.30	13.40	13.80	14.20	13.60	13.70	14.00	14.40
85	TC	177.0	187.0	203.0	220.0	194.0	198.0	212.0	229.0	206.0	206.0	219.0	235.0
	SHC	177.0	160.0	135.0	109.0	194.0	186.0	154.0	121.0	206.0	206.0	173.0	132.0
	kW	13.50	13.80	14.20	14.60	13.90	14.00	14.40	14.80	14.20	14.20	14.60	15.00
95	TC	172.0	180.0	195.0	212.0	188.0	190.0	204.0	221.0	199.0	199.0	210.0	226.0
	SHC	172.0	157.0	132.0	106.0	188.0	182.0	151.0	118.0	199.0	199.0	169.0	129.0
	kW	14.70	14.90	15.40	15.80	15.20	15.20	15.60	16.10	15.50	15.50	15.80	16.20
100	TC	169.0	176.0	191.0	207.0	184.0	186.0	200.0	216.0	195.0	195.0	205.0	221.0
	SHC	169.0	155.0	130.0	104.0	184.0	180.0	149.0	116.0	195.0	195.0	168.0	128.0
	kW	15.40	15.60	16.00	16.40	15.80	15.80	16.20	16.70	16.10	16.10	16.40	16.90
105	TC	166.0	172.0	187.0	203.0	181.0	182.0	195.0	211.0	191.0	191.0	201.0	216.0
	SHC	166.0	153.0	128.0	102.0	181.0	178.0	147.0	115.0	191.0	191.0	166.0	126.0
	kW	16.00	16.20	16.60	17.10	16.40	16.50	16.90	17.40	16.70	16.80	17.00	17.50
115	TC	159.0	164.0	178.0	193.0	173.0	174.0	185.0	201.0	183.0	183.0	191.0	205.0
	SHC	159.0	149.0	124.0	98.8	173.0	172.0	144.0	111.0	183.0	183.0	162.0	122.0
	kW	17.30	17.50	17.90	18.40	17.80	17.80	18.10	18.60	18.10	18.10	18.30	18.80

566E180/524A-B180 WITH STANDARD 3-ROW COIL

Temp (F) Air Entering Condenser (Edb)		Evaporator Air — Cfm											
		4500				6000				7500			
		Evaporator Air — Ewb (F)											
		57	62	67	72	57	62	67	72	57	62	67	72
80	TC	169.0	180.0	195.0	211.0	185.0	190.0	204.0	221.0	196.0	197.0	211.0	227.0
	SHC	169.0	152.0	128.0	104.0	185.0	175.0	146.0	115.0	196.0	193.0	162.0	125.0
	kW	12.70	12.90	13.30	13.70	13.10	13.20	13.50	13.90	13.30	13.30	13.70	14.10
85	TC	167.0	177.0	192.0	208.0	182.0	186.0	201.0	217.0	193.0	194.0	207.0	223.0
	SHC	167.0	151.0	127.0	103.0	182.0	173.0	144.0	113.0	193.0	191.0	160.0	123.0
	kW	13.30	13.50	13.90	14.30	13.60	13.70	14.10	14.50	13.90	13.90	14.30	14.70
95	TC	161.0	170.0	184.0	200.0	176.0	179.0	193.0	209.0	186.0	187.0	199.0	215.0
	SHC	161.0	147.0	124.0	99.8	176.0	169.0	141.0	111.0	186.0	186.0	157.0	120.0
	kW	14.50	14.70	15.10	15.50	14.80	14.90	15.30	15.70	15.10	15.10	15.50	15.90
100	TC	159.0	166.0	181.0	196.0	173.0	176.0	189.0	204.0	183.0	183.0	194.0	210.0
	SHC	159.0	145.0	122.0	98.2	173.0	167.0	139.0	109.0	183.0	183.0	155.0	119.0
	kW	15.10	15.30	15.70	16.10	15.50	15.50	15.90	16.40	15.70	15.70	16.10	16.50
105	TC	156.0	163.0	177.0	192.0	169.0	172.0	185.0	200.0	179.0	179.0	190.0	205.0
	SHC	156.0	144.0	120.0	96.6	169.0	165.0	138.0	107.0	179.0	179.0	153.0	117.0
	kW	15.70	15.90	16.30	16.80	16.10	16.20	16.50	17.00	16.40	16.40	16.70	17.20
115	TC	150.0	155.0	168.0	183.0	163.0	164.0	175.0	190.0	172.0	172.0	180.0	195.0
	SHC	150.0	140.0	117.0	93.2	163.0	160.0	134.0	104.0	172.0	172.0	150.0	114.0
	kW	17.10	17.20	17.60	18.10	17.50	17.50	17.80	18.30	17.70	17.70	18.00	18.50

LEGEND

Edb — Entering Dry Bulb
Ewb — Entering Wet Bulb
kW — Compressor Motor Power Input
SHC — Sensible Heat Capacity (1000 Btuh) Gross
TC — Total Capacity (1000 Btuh) Gross

PERFORMANCE DATA (cont)

COMBINATION RATINGS (cont)

UNIT 566E180 (cont)

566E180/524A-C240 WITH HIGH-CAPACITY 4-ROW COIL													
Temp (F) Air Entering Condenser (Edb)		Evaporator Air — Cfm											
		6,000				8,000				10,000			
		Evaporator Air — Ewb (F)											
		57	62	67	72	57	62	67	72	57	62	67	72
80	TC	201.0	205.0	220.0	238.0	217.0	217.0	229.0	246.0	228.0	228.0	234.0	251.0
	SHC	201.0	191.0	159.0	125.0	217.0	217.0	184.0	140.0	228.0	228.0	207.0	155.0
	kW	13.40	13.50	13.90	14.40	13.80	13.80	14.10	14.60	14.10	14.10	14.30	14.70
85	TC	198.0	202.0	216.0	234.0	214.0	214.0	225.0	242.0	225.0	225.0	230.0	247.0
	SHC	198.0	190.0	157.0	123.0	214.0	214.0	182.0	139.0	225.0	225.0	205.0	154.0
	kW	14.00	14.10	14.50	15.00	14.40	14.40	14.70	15.20	14.70	14.70	14.90	15.30
95	TC	191.0	194.0	208.0	225.0	207.0	207.0	216.0	232.0	217.0	217.0	221.0	237.0
	SHC	191.0	186.0	154.0	120.0	207.0	207.0	179.0	136.0	217.0	217.0	201.0	150.0
	kW	15.30	15.30	15.70	16.20	15.70	15.70	15.90	16.40	16.00	16.00	16.10	16.60
100	TC	188.0	190.0	204.0	220.0	202.0	203.0	211.0	227.0	213.0	213.0	216.0	232.0
	SHC	188.0	183.0	152.0	118.0	202.0	203.0	177.0	134.0	213.0	213.0	199.0	149.0
	kW	15.90	15.90	16.30	16.80	16.30	16.30	16.60	17.10	16.60	16.60	16.70	17.20
105	TC	184.0	185.0	199.0	215.0	198.0	198.0	206.0	222.0	208.0	208.0	211.0	226.0
	SHC	184.0	181.0	150.0	117.0	198.0	198.0	175.0	132.0	208.0	208.0	197.0	147.0
	kW	16.50	16.60	17.00	17.50	17.00	17.00	17.20	17.70	17.30	17.30	17.40	17.80
115	TC	176.0	177.0	189.0	205.0	190.0	190.0	196.0	211.0	199.0	199.0	201.0	214.0
	SHC	176.0	176.0	146.0	113.0	190.0	190.0	171.0	128.0	199.0	199.0	192.0	143.0
	kW	17.90	17.90	18.30	18.80	18.30	18.30	18.50	19.00	18.60	18.60	18.70	19.10

566E180/524A-B240 WITH STANDARD 3-ROW COIL													
Temp (F) Air Entering Condenser (Edb)		Evaporator Air — Cfm											
		6,000				8,000				10,000			
		Evaporator Air — Ewb (F)											
		57	62	67	72	57	62	67	72	57	62	67	72
80	TC	190.0	194.0	209.0	226.0	205.0	205.0	217.0	233.0	215.0	215.0	222.0	238.0
	SHC	190.0	181.0	150.0	118.0	205.0	204.0	173.0	132.0	215.0	215.0	193.0	145.0
	kW	13.20	13.30	13.60	14.00	13.50	13.50	13.80	14.20	13.80	13.80	14.00	14.40
85	TC	187.0	191.0	205.0	222.0	202.0	202.0	213.0	229.0	211.0	211.0	218.0	234.0
	SHC	187.0	179.0	149.0	117.0	202.0	201.0	171.0	131.0	211.0	211.0	191.0	144.0
	kW	13.80	13.90	14.20	14.60	14.10	14.10	14.40	14.80	14.40	14.40	14.50	15.00
95	TC	181.0	184.0	197.0	213.0	195.0	195.0	204.0	220.0	204.0	204.0	209.0	225.0
	SHC	181.0	175.0	146.0	114.0	195.0	195.0	168.0	128.0	204.0	204.0	187.0	141.0
	kW	15.00	15.00	15.40	15.90	15.30	15.30	15.60	16.10	15.60	15.60	15.80	16.20
100	TC	178.0	180.0	193.0	209.0	191.0	191.0	200.0	216.0	200.0	200.0	205.0	220.0
	SHC	178.0	173.0	144.0	112.0	191.0	191.0	166.0	126.0	200.0	200.0	185.0	139.0
	kW	15.60	15.70	16.00	16.50	16.00	16.00	16.20	16.70	16.20	16.20	16.40	16.80
105	TC	174.0	176.0	188.0	204.0	187.0	187.0	195.0	210.0	196.0	196.0	200.0	215.0
	SHC	174.0	171.0	142.0	110.0	187.0	187.0	164.0	124.0	196.0	196.0	183.0	137.0
	kW	16.20	16.30	16.60	17.10	16.60	16.60	16.90	17.30	16.90	16.90	17.00	17.50
115	TC	167.0	168.0	179.0	194.0	179.0	179.0	185.0	200.0	187.0	187.0	190.0	203.0
	SHC	167.0	166.0	138.0	107.0	179.0	179.0	160.0	121.0	187.0	187.0	178.0	133.0
	kW	17.60	17.60	18.00	18.40	17.90	17.90	18.10	18.60	18.20	18.20	18.30	18.70

LEGEND

Edb — Entering Dry Bulb
Ewb — Entering Wet Bulb
kW — Compressor Motor Power Input
SHC — Sensible Heat Capacity (1000 Btuh) Gross
TC — Total Capacity (1000 Btuh) Gross

PERFORMANCE DATA (cont)

COMBINATION RATINGS (cont)

UNIT 566E240

566E240/524A-C240 WITH HIGH-CAPACITY 4-ROW COIL													
Temp (F) Air Entering Condenser (Edb)		Evaporator Air — Cfm											
		6,000				8,000				10,000			
		Evaporator Air — Ewb (F)											
		57	62	67	72	57	62	67	72	57	62	67	72
80	TC	228.0	239.0	258.0	279.0	248.0	252.0	269.0	290.0	262.0	262.0	277.0	297.0
	SHC	228.0	207.0	174.0	139.0	248.0	240.0	199.0	155.0	262.0	262.0	222.0	169.0
	kW	17.60	18.00	18.70	19.40	18.30	18.40	19.10	19.80	18.80	18.80	19.30	20.10
85	TC	225.0	235.0	254.0	274.0	245.0	248.0	265.0	285.0	258.0	258.0	272.0	291.0
	SHC	225.0	205.0	172.0	137.0	245.0	237.0	197.0	153.0	258.0	258.0	220.0	167.0
	kW	18.40	18.70	19.40	20.10	19.10	19.20	19.80	20.60	19.60	19.60	20.10	20.80
95	TC	218.0	227.0	244.0	263.0	236.0	238.0	254.0	274.0	249.0	249.0	261.0	280.0
	SHC	218.0	201.0	168.0	134.0	236.0	232.0	193.0	149.0	249.0	249.0	216.0	163.0
	kW	20.00	20.30	21.00	21.70	20.70	20.70	21.30	22.10	21.10	21.10	21.60	22.40
100	TC	214.0	222.0	239.0	258.0	232.0	234.0	249.0	268.0	245.0	245.0	255.0	274.0
	SHC	214.0	199.0	166.0	132.0	232.0	229.0	190.0	147.0	245.0	245.0	213.0	161.0
	kW	20.90	21.10	21.70	22.50	21.50	21.50	22.10	22.90	22.00	22.00	22.40	23.10
105	TC	211.0	217.0	234.0	252.0	228.0	229.0	243.0	262.0	240.0	240.0	249.0	267.0
	SHC	211.0	196.0	163.0	130.0	228.0	226.0	188.0	145.0	240.0	240.0	211.0	159.0
	kW	21.70	22.00	22.60	23.30	22.40	22.40	22.90	23.70	22.80	22.80	23.20	23.90
115	TC	203.0	207.0	223.0	241.0	219.0	219.0	231.0	249.0	230.0	230.0	237.0	254.0
	SHC	203.0	192.0	159.0	125.0	219.0	219.0	184.0	140.0	230.0	230.0	206.0	155.0
	kW	23.50	23.70	24.30	25.00	24.10	24.10	24.60	25.40	24.60	24.60	24.90	25.60

566E240/524A-B240 WITH STANDARD 3-ROW COIL													
Temp (F) Air Entering Condenser (Edb)		Evaporator Air — Cfm											
		6,000				8,000				10,000			
		Evaporator Air — Ewb (F)											
		57	62	67	72	57	62	67	72	57	62	67	72
80	TC	219.0	229.0	248.0	267.0	237.0	241.0	259.0	278.0	250.0	251.0	265.0	285.0
	SHC	219.0	199.0	167.0	134.0	237.0	228.0	190.0	148.0	250.0	250.0	211.0	161.0
	kW	17.30	17.70	18.30	19.00	17.90	18.10	18.70	19.40	18.40	18.40	18.90	19.60
85	TC	216.0	226.0	243.0	263.0	234.0	237.0	254.0	273.0	246.0	247.0	261.0	280.0
	SHC	216.0	197.0	165.0	132.0	234.0	226.0	188.0	146.0	246.0	246.0	209.0	159.0
	kW	18.10	18.40	19.00	19.70	18.70	18.80	19.40	20.10	19.10	19.10	19.70	20.40
95	TC	209.0	217.0	234.0	253.0	226.0	228.0	244.0	263.0	238.0	238.0	250.0	269.0
	SHC	209.0	192.0	161.0	128.0	226.0	221.0	184.0	142.0	238.0	238.0	205.0	155.0
	kW	19.70	20.00	20.60	21.30	20.30	20.40	20.90	21.70	20.70	20.70	21.20	21.90
100	TC	206.0	213.0	230.0	248.0	222.0	224.0	239.0	257.0	234.0	234.0	245.0	263.0
	SHC	206.0	190.0	159.0	126.0	222.0	218.0	182.0	140.0	234.0	234.0	202.0	153.0
	kW	20.60	20.80	21.40	22.10	21.10	21.20	21.70	22.50	21.50	21.50	22.00	22.70
105	TC	202.0	209.0	225.0	242.0	218.0	219.0	233.0	251.0	229.0	229.0	239.0	257.0
	SHC	202.0	188.0	157.0	124.0	218.0	215.0	180.0	138.0	229.0	229.0	200.0	151.0
	kW	21.40	21.70	22.20	22.90	22.00	22.00	22.60	23.30	22.40	22.40	22.80	23.50
115	TC	195.0	200.0	215.0	232.0	210.0	210.0	223.0	239.0	220.0	220.0	228.0	244.0
	SHC	195.0	184.0	153.0	120.0	210.0	209.0	175.0	134.0	220.0	220.0	196.0	147.0
	kW	23.30	23.40	24.00	24.60	23.80	23.80	24.30	25.00	24.20	24.20	24.50	25.20

LEGEND

Edb — Entering Dry Bulb
Ewb — Entering Wet Bulb
kW — Compressor Motor Power Input
SHC — Sensible Heat Capacity (1000 Btuh) Gross
TC — Total Capacity (1000 Btuh) Gross

PERFORMANCE DATA (cont)

COMBINATION RATINGS (cont)

UNIT 566E240 (cont)

566E240/524A-C300 WITH HIGH-CAPACITY 4-ROW COIL

Temp (F) Air Entering Condenser (Edb)		Evaporator Air — Cfm											
		7,500				10,000				12,500			
		Evaporator Air — Ewb (F)											
		57	62	67	72	57	62	67	72	57	62	67	72
80	TC	249.0	254.0	272.0	293.0	268.0	268.0	282.0	303.0	281.0	281.0	289.0	309.0
	SHC	249.0	236.0	196.0	154.0	268.0	268.0	226.0	172.0	281.0	281.0	253.0	190.0
	kW	18.30	18.50	19.20	19.90	19.00	19.00	19.50	20.30	19.50	19.50	19.80	20.50
85	TC	245.0	249.0	267.0	288.0	263.0	263.0	277.0	297.0	276.0	276.0	283.0	303.0
	SHC	245.0	234.0	194.0	152.0	263.0	263.0	224.0	170.0	276.0	276.0	251.0	188.0
	kW	19.10	19.20	19.90	20.70	19.80	19.80	20.30	21.00	20.20	20.20	20.50	21.30
95	TC	237.0	240.0	257.0	277.0	254.0	254.0	266.0	285.0	266.0	266.0	272.0	290.0
	SHC	237.0	229.0	190.0	148.0	254.0	254.0	220.0	166.0	266.0	266.0	246.0	184.0
	kW	20.70	20.80	21.40	22.20	21.30	21.30	21.80	22.60	21.80	21.80	22.00	22.80
100	TC	232.0	235.0	251.0	271.0	249.0	250.0	260.0	279.0	261.0	261.0	266.0	284.0
	SHC	232.0	226.0	187.0	145.0	249.0	250.0	217.0	164.0	261.0	261.0	244.0	182.0
	kW	21.50	21.60	22.20	23.00	22.20	22.10	22.60	23.40	22.60	22.60	22.80	23.60
105	TC	228.0	230.0	246.0	265.0	244.0	245.0	254.0	272.0	256.0	256.0	260.0	277.0
	SHC	228.0	223.0	185.0	143.0	244.0	245.0	215.0	162.0	256.0	256.0	241.0	180.0
	kW	22.30	22.40	23.00	23.80	23.00	23.00	23.40	24.20	23.50	23.40	23.60	24.40
115	TC	219.0	219.0	234.0	252.0	234.0	234.0	241.0	259.0	244.0	244.0	247.0	263.0
	SHC	219.0	217.0	180.0	139.0	234.0	234.0	210.0	157.0	244.0	244.0	235.0	175.0
	kW	24.10	24.10	24.70	25.50	24.70	24.70	25.00	25.80	25.20	25.20	25.30	26.00

566E240/524A-B300 WITH STANDARD 3-ROW COIL

Temp (F) Air Entering Condenser (Edb)		Evaporator Air — Cfm											
		7,500				10,000				12,500			
		Evaporator Air — Ewb (F)											
		57	62	67	72	57	62	67	72	57	62	67	72
80	TC	236.0	242.0	260.0	280.0	254.0	254.0	269.0	290.0	266.0	266.0	276.0	296.0
	SHC	236.0	223.0	185.0	146.0	254.0	252.0	212.0	162.0	266.0	266.0	236.0	178.0
	kW	17.90	18.10	18.70	19.50	18.50	18.50	19.10	19.80	18.90	18.90	19.30	20.00
85	TC	233.0	238.0	256.0	275.0	250.0	250.0	265.0	285.0	262.0	262.0	271.0	290.0
	SHC	233.0	221.0	184.0	144.0	250.0	249.0	210.0	161.0	262.0	262.0	234.0	176.0
	kW	18.70	18.80	19.50	20.20	19.30	19.30	19.80	20.60	19.70	19.70	20.00	20.80
95	TC	225.0	229.0	246.0	265.0	242.0	242.0	255.0	273.0	253.0	253.0	260.0	279.0
	SHC	225.0	216.0	179.0	140.0	242.0	242.0	206.0	157.0	253.0	253.0	230.0	172.0
	kW	20.30	20.40	21.00	21.80	20.90	20.90	21.40	22.10	21.30	21.30	21.60	22.30
100	TC	221.0	225.0	241.0	260.0	237.0	237.0	249.0	268.0	248.0	248.0	255.0	273.0
	SHC	221.0	214.0	178.0	138.0	237.0	237.0	204.0	155.0	248.0	248.0	227.0	170.0
	kW	21.10	21.20	21.80	22.50	21.70	21.70	22.10	22.90	22.10	22.10	22.40	23.10
105	TC	217.0	220.0	236.0	254.0	233.0	233.0	243.0	262.0	243.0	243.0	249.0	266.0
	SHC	217.0	211.0	175.0	136.0	233.0	233.0	202.0	153.0	243.0	243.0	225.0	168.0
	kW	22.00	22.10	22.60	23.40	22.50	22.50	23.00	23.70	22.90	22.90	23.20	23.90
115	TC	209.0	211.0	225.0	242.0	223.0	223.0	232.0	249.0	233.0	233.0	237.0	253.0
	SHC	209.0	206.0	171.0	132.0	223.0	223.0	197.0	148.0	233.0	233.0	219.0	164.0
	kW	23.80	23.80	24.40	25.10	24.30	24.30	24.60	25.40	24.70	24.70	24.90	25.60

LEGEND

Edb — Entering Dry Bulb
Ewb — Entering Wet Bulb
kW — Compressor Motor Power Input
SHC — Sensible Heat Capacity (1000 Btuh) Gross
TC — Total Capacity (1000 Btuh) Gross

ELECTRICAL DATA

566D150-240

UNIT SIZE		NOMINAL VOLTAGE (3-Ph, 60 Hz)	VOLTAGE RANGE*		COMPRESSOR		FAN MOTORS (Qty 2)			POWER SUPPLY		
					RLA	LRA	FLA (ea) Fan No.		kW	MCA	MOCP†	ICF
			Min	Max			1	2				
566D	150	208/230	187	253	49.3	191	4.3	3.7	1.41	69.6	100	199
		460	414	528	22.1	80	2.3	1.9		31.7	50	84
		575	518	660	17.9	69	1.8	1.8		25.6	40	73
	180	208/230	187	253	63.6	266	4.3	3.7	1.41	87.5	125	274
		460	414	528	29.3	120	2.3	1.9		40.7	60	124
		575	518	660	23.8	96	1.8	1.8		33.0	50	100
	240	208/230	187	254	67.9	345	4.3	3.7	1.41	93.4	150	353
		460	414	508	34.7	173	2.3	1.9		48.1	80	177
		575	518	632	28.8	120	1.8	1.8		40.1	60	124

LEGEND

FLA — Full Load Amps
HACR — Heating, Air Conditioning and Refrigeration
ICF — Maximum Instantaneous Current Flow During Start-Up (LRA of compressor plus total FLA of fan motors)
kW — Total Fan Motor Input (kilowatts)
LRA — Locked Rotor Amps
MCA — Minimum Circuit Amps per NEC, Section 430-24
MOCP — Maximum Overcurrent Protection (amps)
RLA — Rated Load Amps (compressor)

*Units are suitable for use on electrical systems where voltage supplied to the unit terminals is not below or above the listed limits.
†Fuse or HACR circuit breaker.

NOTES:
1. The MCA and MOCP values are calculated in accordance with the National Electrical Code (NEC), Article 440.
2. Motor RLA and LRA values are established in accordance with Underwriters' Laboratories (UL), Standard 1995.
3. The 575-v units are UL, Canada-listed only.

566E150-240

UNIT SIZE		FACTORY-INSTALLED OPTION	NOMINAL VOLTAGE (3 Ph, 60 Hz)	VOLTAGE RANGE*		COMPRESSOR 1		COMPRESSOR 2		FAN MOTORS Qty 2)			POWER SUPPLY		
										FLA (ea) Fan No.		kW			
				Min	Max	RLA	LRA	RLA	LRA	1	2		MCA	MOCP†	ICF
566E	150	NONE OR DISCONNECT CONVENIENCE OUTLET	208/230	187	253	20.7	156	20.7	156	4.3	3.7	1.41	55.6	70	186
													63.5	80	194
		NONE OR DISCONNECT CONVENIENCE OUTLET	460	414	528	10.0	75	10.0	75	2.3	1.9	1.41	27.7	35	90
													31.3	40	94
		NONE OR DISCONNECT CONVENIENCE OUTLET	575	518	660	8.2	54	8.2	54	1.8	1.8	1.41	23.1	30	67
													25.9	30	70
	180	NONE OR DISCONNECT CONVENIENCE OUTLET	208/230	187	253	32.1	195	32.1	195	4.3	3.7	1.41	81.2	100	236
													89.2	100	244
		NONE OR DISCONNECT CONVENIENCE OUTLET	460	414	528	16.4	95	16.4	95	2.3	1.9	1.41	42.1	50	117
													45.7	60	120
		NONE OR DISCONNECT CONVENIENCE OUTLET	575	518	660	12.0	80	12.0	80	1.8	1.8	1.41	31.6	40	97
													34.5	40	99
	240	NONE OR DISCONNECT CONVENIENCE OUTLET	208/230	187	253	37.8	239	37.8	239	4.3	3.7	1.41	94.1	125	286
													102.0	150	294
		NONE OR DISCONNECT CONVENIENCE OUTLET	460	414	528	19.2	125	19.2	125	2.3	1.9	1.41	48.4	60	149
													52.0	70	153
		NONE OR DISCONNECT CONVENIENCE OUTLET	575	518	660	13.8	80	13.8	80	1.8	1.8	1.41	35.7	45	98
													38.5	50	101

LEGEND

FLA — Full Load Amps
HACR — Heating, Air Conditioning and Refrigeration
ICF — Maximum Instantaneous Current Flow During Start-Up (LRA of compressor plus total FLA of fan motors)
kW — Total Fan Motor Input (kilowatts)
LRA — Locked Rotor Amps
MCA — Minimum Circuit Amps per NEC, Section 430-24
MOCP — Maximum Overcurrent Protection (amps)
RLA — Rated Load Amps (compressor)

*Units are suitable for use on electrical systems where voltage supplied to the unit terminals is not below or above the listed limits.
†Fuse or HACR circuit breaker.

NOTES:
1. The MCA and MOCP values are calculated in accordance with the National Electrical Code (NEC), Article 440.
2. Motor RLA and LRA values are established in accordance with Underwriters' Laboratories (UL), Standard 1995.
3. The 575-v units are UL, Canada-listed only.
4. Convenience outlet is available as either a factory-installed option or a field-installed accessory and is 115-v, 1ph, 60 Hz.

APPLICATION DATA — 566D150-240, 566E150-240

1. **INSTALLATION —** Select equipment to match or to be slightly less than peak load. This provides better humidity control, less unit cycling, and less part-load operation.

   When selecting vapor line sizes, oil return must be evaluated, particularly at part-load conditions.

   The indoor fan must always be operating when outdoor unit is operating.

   Ductwork should be sized according to unit size, not building load.

   To minimize the possibility of air recirculation, avoid the use of concentric supply/return grilles.

   Indoor equipment should be selected at no less than 300 cfm/ton.

OPERATING LIMITS

Maximum Outdoor	115 F
Minimum Outdoor Ambient	See Minimum Outdoor-Air Operating Temperature table below.
Minimum Return-Air Temperature	55 F
Maximum Return-Air Temperature	95 F
Normal Acceptable Saturation Suction Temperature Range	25 to 55 F
Maximum Discharge Temperature	295 F
Minimum Discharge Superheat	60 F

MINIMUM OUTDOOR-AIR OPERATING TEMPERATURE — 566D150-240 UNITS

UNIT 566D	NO. OF CYLINDERS	FULL LOAD CAPACITY (%)	MINIMUM OUTDOOR-AIR OPERATING TEMPERATURE (F)	
			Base Unit	With Low-Ambient Control
150	6	100	20	–20
	4	67	31	
	2*	33*	40	
180	6	100	20	
	4	67	33	
	2*	33*	47	
240	4	100	15	
	2	50	20	

*Requires field-installed unloader.

MINIMUM OUTDOOR-AIR OPERATING TEMPERATURE — 566E150-240 UNITS

UNIT 566E	FULL LOAD CAPACITY (%)	SATURATED COND TEMPERATURE (F)	MINIMUM OUTDOOR-AIR TEMPERATURE (F)	
			Base Unit	With Low-Ambient Control
150	100/50	90	50	–20
180				
240				

LIQUID LINE DATA — 566D150-240 UNITS

UNIT 566D	MAX ALLOW. LIFT (ft)	LIQUID LINE	
		Max Allow. Pressure Drop (psi)	Max Allow. Temp Loss (°F)
150	67	7	2
180	82		
240	87		

NOTE: Data above is for units operating at 45 F saturated suction and 95 F entering air.

LIQUID LINE DATA — 566E150-240 UNITS

UNIT 566E	MAX ALLOW. LIFT (ft)	LIQUID LINE	
		Max Allow. Pressure Drop (psi)	Max Allow. Temp Loss (°F)
150 180 240	60	7	2

2. **REFRIGERANT PIPING —** It is recommended that the refrigerant piping for all commercial split systems include a liquid line solenoid valve, a liquid line filter drier, and a sight glass.

   For refrigerant lines longer than 75 lineal ft, a liquid line solenoid valve and a suction accumulator are required. Refer to the Refrigerant Specialties table.

REFRIGERANT SPECIALTIES PART NUMBERS

UNIT	LIQUID LINE SIZE (in.)	LIQUID LINE SOLENOID VALVE (LLSV)	LLSV COIL	SIGHT GLASS	FILTER DRIER	SUCTION LINE ACCUMULATOR
566D150	1/2	200RB7T4M	AMG/24V	AMI-1TT4	P502-8757S*	S-7063
	5/8	200RA8T5M	AMG/24V	AMI-1TT5	P502-8757S*	S-7063
566D180	1/2	200RB7T4M	AMG/24V	AMI-1TT4	P502-8757S*	S-7721
	5/8	200RA8T5M	AMG/24V	AMI-1TT5	P502-8757S*	S-7721
	7/8	200RA8T7M	AMG/24V	AMI-1TT7	P502-8757S	S-7721
566D240	5/8	200RA9T5M	AMG/24V	AMI-1TT5	P502-8757S*	S-7721
	7/8	200RA9T7M	AMG/24V	AMI-1TT7	P502-8757S	S-7721
566E150	1/2	200RB5T4M Qty 2	AMG/24V Qty 2	AMI-1TT4 Qty 2	P502-8304S Qty 2	S-7063S* Qty 2
566E180	1/2	200RB5T4M Qty 2	AMG/24V Qty 2	AMI-1TT4 Qty 2	P502-8304S Qty 2	S-7063S Qty 2
	5/8	200RB5T5M Qty 2	AMG/24V Qty 2	AMI-1TT5 Qty 2	P502-8304S Qty 2	S-7063S Qty 2
566E240	1/2	200RB6T4M Qty 2	AMG/24V Qty 2	AMI-1TT5 Qty 2	P502-8307S*	S-7063S Qty 2
	5/8	200RB6T5M Qty 2	AMG/24V Qty 2	AMI-1TT5 Qty 2	P502-8307S*	S-7063S Qty 2

*Bushings required.

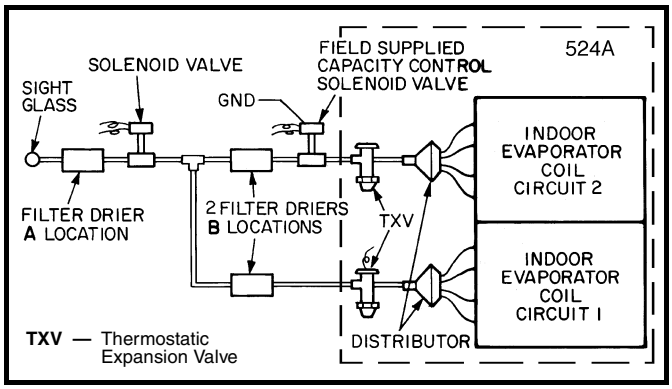

Location of One Liquid Line Solenoid Valve Serving 2 Coil Circuits (Solenoid Drop Control)

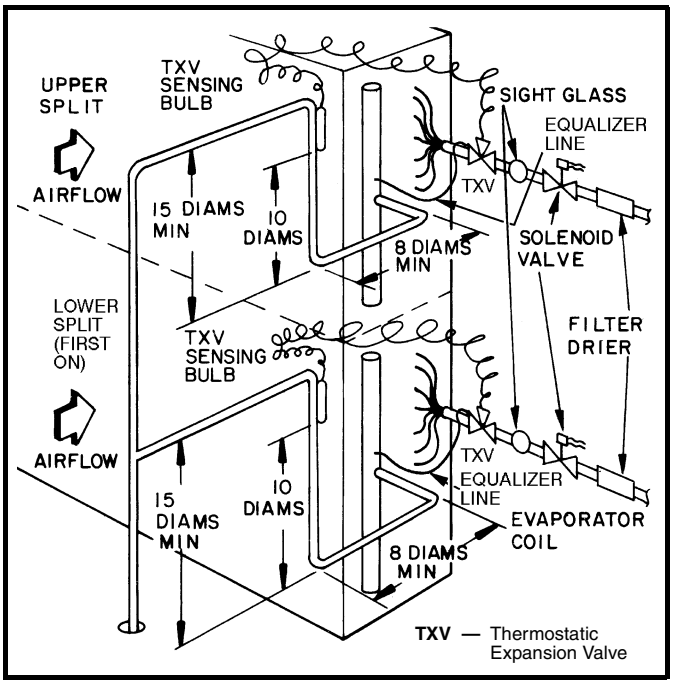

Face-Split Coil Suction and Liquid Line Piping

REFRIGERANT PIPING SIZES

UNIT 566D	LINEAR LENGTH OF INTERCONNECTING PIPING (FT)									
	0-15		16-25		26-50		51-75		76-100	
	Line Size (in. OD)									
	L	S	L	S	L	S	L	S	L	S
150	1/2	1 1/8	1/2	1 3/8	5/8	1 3/8	5/8	1 5/8*	7/8	1 5/8*
180	1/2	1 3/8	5/8	1 3/8	5/8	1 5/8	7/8	1 5/8	7/8	2 1/8*
240	5/8	1 5/8	5/8	1 5/8	7/8	1 5/8	7/8	2 1/8	7/8	2 1/8

UNIT 566E	LINEAR LENGTH OF INTERCONNECTING PIPING (FT)							
	0-25		25-50		50-75		75-100	
	Line Size (in. OD)							
	L	S	L	S	L	S	L	S
150	1/2	1 1/8	1/2	1 1/8	1/2	1 1/8	1/2	1 1/8
180	1/2	1 3/8	1/2	1 3/8	1/2	1 3/8	5/8	1 3/8
240	1/2	1 3/8	1/2	1 3/8	5/8	1 3/8	5/8	1 3/8

LEGEND

L — Liquid
S — Suction

Close-coupled.

*Requires a double suction riser if 2 unloaders are used and the evaporator is below the condensing unit. See Refrigerant Piping Sizes — Double Suction Risers table and Suction Line Piping figure below for more information.

NOTES:
1. Pipe sizes are based on a 2° F loss for liquid lines and a 1.5° F loss for suction lines.
2. Pipe sizes are based on an equivalent length equal to the maximum length of interconnecting piping plus 50% for fittings. A more accurate estimate may result in smaller sizes.

REFRIGERANT PIPING SIZES — DOUBLE SUCTION RISERS

UNIT 566D	LINEAR LENGTH OF INTERCONNECTING PIPING (FT)					
	51-75			76-100		
	Line Size (in. OD)					
	A	B	C	A	B	C
150	1 1/8	1 3/8	1 5/8	1 1/8	1 3/8	1 5/8
180	—	—	—	1 3/8	1 5/8	2 1/8

NOTES:
1. See Suction Line Piping figure below for "A," "B," and "C" dimensions.
2. No double suction risers are needed for unit size 240.

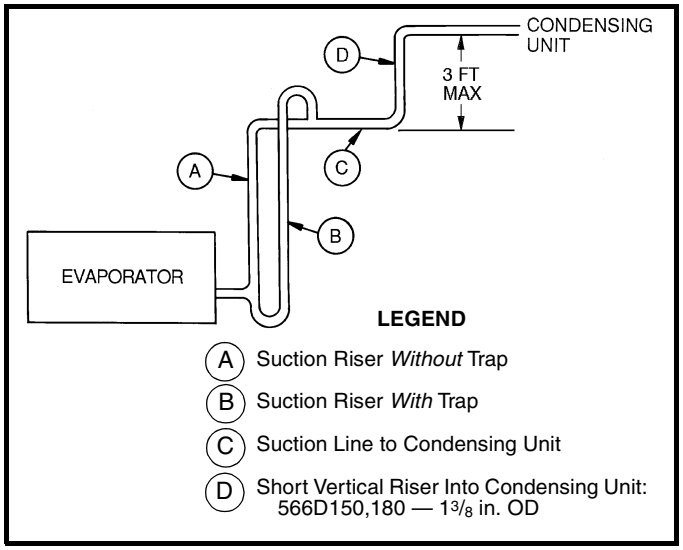

Suction Line Piping

MULTIPLE CONDENSING UNIT ARRANGEMENTS*

566D, 566E150-240

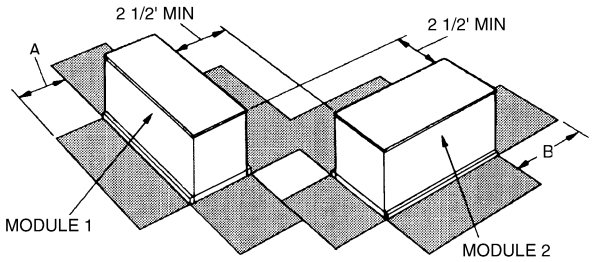

PERPENDICULAR

566D, 566E150-240

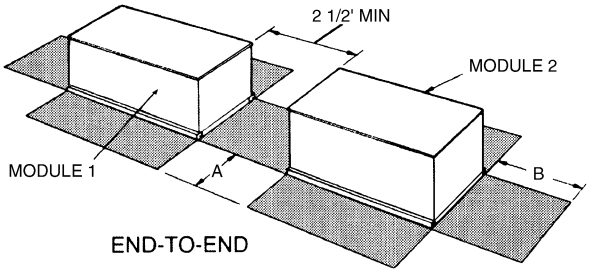

END-TO-END

566D, 566E150-240

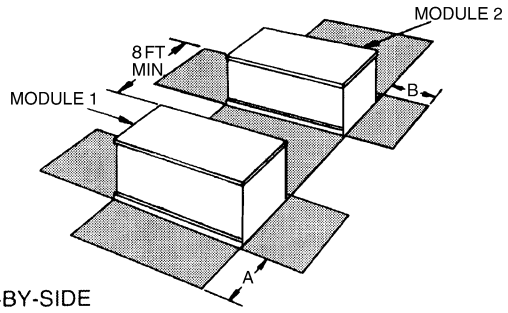

SIDE-BY-SIDE

Space for Service and Airflow

*For clearances between controls and grounded surfaces, check local codes.

566D,566E	DIMENSIONS (ft)	
150-240	A	B
	4	4

566D/E150-240

TYPICAL PIPING AND WIRING

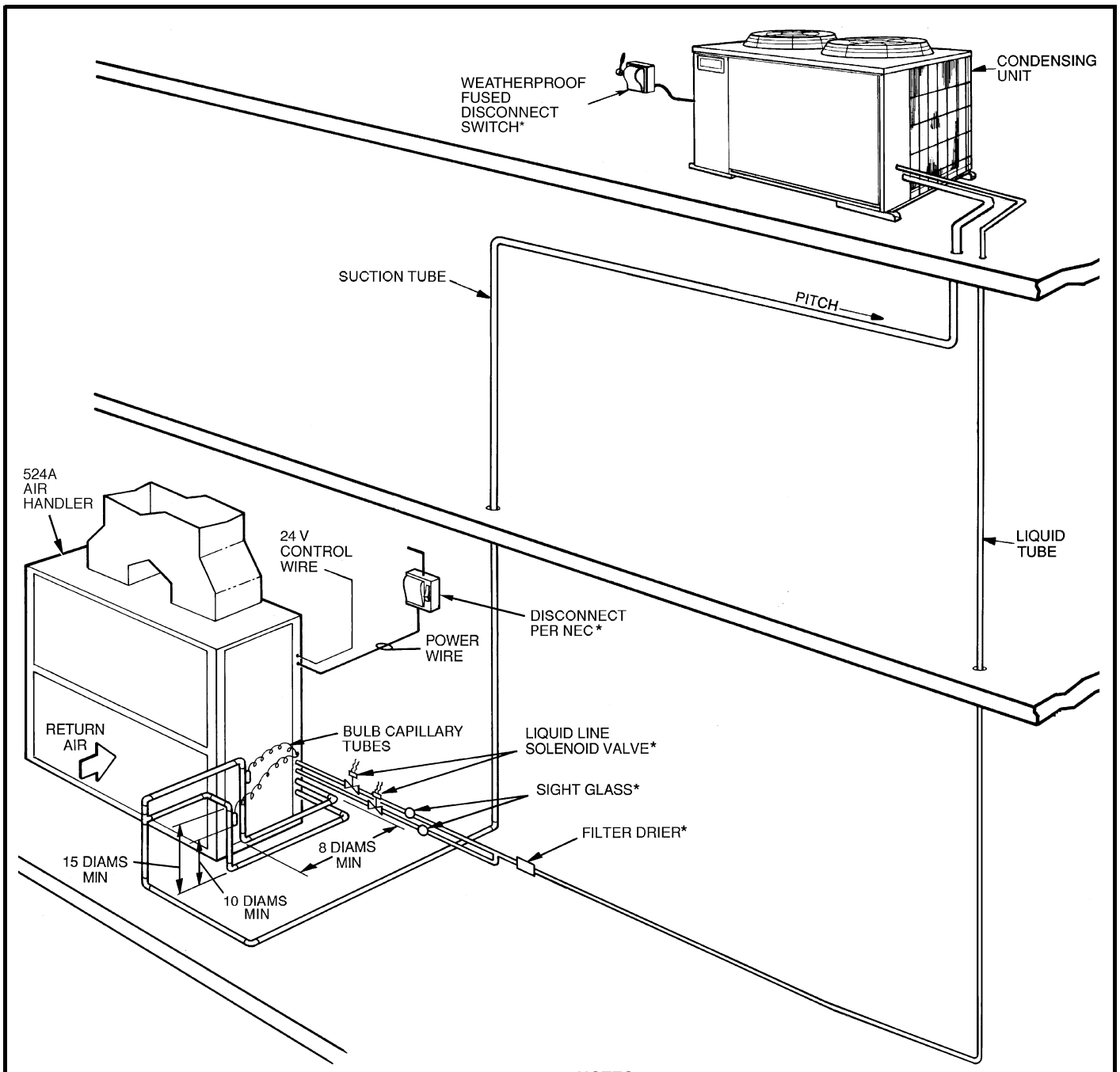

LEGEND

NEC — National Electrical Code
TXV — Thermostatic Expansion Valve
Piping

*Field supplied.

NOTES:
1. All piping must follow standard refrigerant piping techniques.
2. All wiring must comply with the applicable local and national codes.
3. Wiring and piping shown are general points-of-connection guides only and are not intended for, or to include all details for, a specific installation.
4. Liquid line solenoid valve (solenoid drop control) is recommended to prevent refrigerant migration to the compressor.
5. Internal factory-supplied TXVs not shown.

Rooftop Installation — 566D150-240

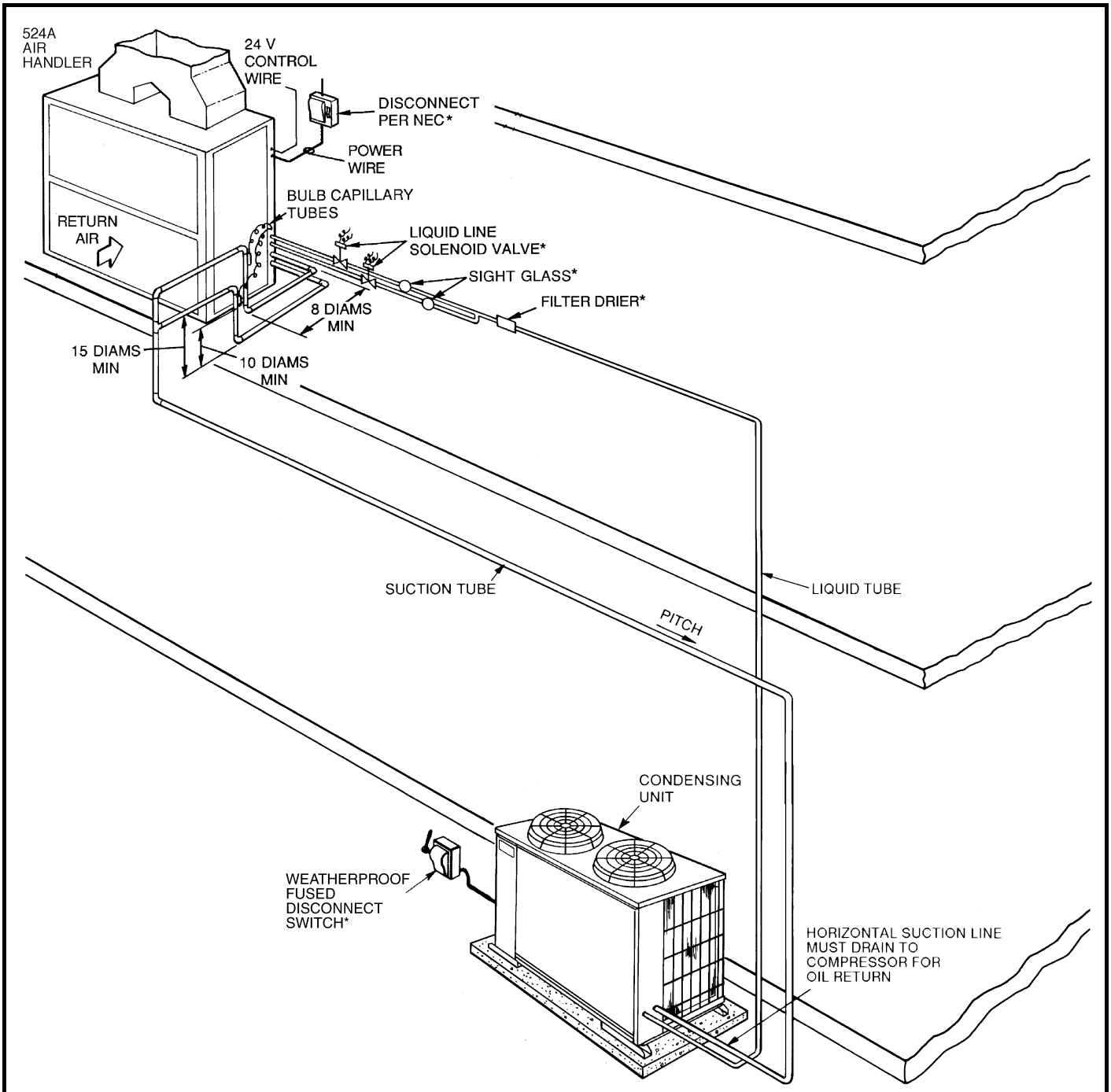

LEGEND

NEC — National Electrical Code
TXV — Thermostatic Expansion Valve
Piping
*Field supplied.

NOTES:
1. All piping must follow standard refrigerant piping techniques.
2. All wiring must comply with the applicable local and national codes.
3. Wiring and piping shown are general points-of-connection guides only and are not intended for, or to include all details for, a specific installation.
4. Liquid line solenoid valve (solenoid drop control) is recommended to prevent refrigerant migration to the compressor.
5. Internal factory-supplied TXVs not shown.

Ground Level Installation — 566D150-240

COMMERCIAL AIR-COOLED CONDENSING UNITS

HVAC GUIDE SPECIFICATIONS

SIZE RANGE: 12 1/2 TO 20 TONS, NOMINAL

BRYANT MODEL NUMBER: 566D, SIZES 150-240
566E, SIZES 150-240

PART 1 — GENERAL

1.01 SYSTEM DESCRIPTION

Outdoor-mounted, air-cooled condensing unit suitable for on-the-ground or rooftop installation. Unit shall consist of a semi-hermetic reciprocating compressor (566D) or scroll compressor (566E), an air-cooled coil, propeller-type condenser fans, and a control box. Unit shall discharge supply air upward as shown on contract drawings. Unit shall be used in a refrigeration circuit to match a packaged fan coil unit.

1.02 QUALITY ASSURANCE

A. Unit shall be rated in accordance with ARI latest revisions and shall be certified and listed in the latest ARI directory.

B. Unit shall be manufactured in a facility registered to ISO 9001:2000 manufacturing quality standard.

C. Unit construction shall comply with latest edition of ANSI/ASHRAE and with NEC.

D. Unit shall be constructed in accordance with UL standards and shall carry the UL and UL, Canada label.

E. Unit cabinet shall be capable of withstanding 500-hour salt spray exposure per ASTM B117 (scribed specimen).

F. Air-cooled condenser coils shall be leak tested at 150 psig and pressure tested at 480 psig.

1.03 DELIVERY, STORAGE, AND HANDLING

Unit shall be shipped as a single package only, and shall be stored and handled per manufacturer's recommendations.

1.04 WARRANTY (FOR INCLUSION BY SPECIFYING ENGINEER.)

PART 2 — PRODUCTS

2.01 EQUIPMENT

A. General:

Factory assembled, single piece, air-cooled condensing unit. Contained within the unit enclosure shall be all factory wiring, piping, controls, compressor, holding charge (R-22), and special features required prior to field start-up.

B. Unit Cabinet:

Unit cabinet shall be constructed of G-90 galvanized steel, bonderized and coated with a prepainted, baked enamel finish.

C. Fans:

1. Condenser fans shall be direct-drive propeller type, discharging air vertically upward.
2. Condenser-fan motor no. 1 shall be ball bearing type compatible with accessory low-ambient control.
3. Shafts shall have inherent corrosion resistance.
4. Fan blades shall be statically and dynamically balanced.
5. Condenser fan openings shall be equipped with PVC-coated steel wire safety guards.

D. Compressors:

1. 566D150-240 Units:
   a. Compressor shall be serviceable, reciprocating, semi-hermetic type.
   b. Compressor shall be equipped with an automatically reversible oil pump, operating oil charge, suction and discharge shutoff valves, and an insert-type, factory-sized crankcase heater to control oil dilution.
   c. Compressor shall be mounted on spring vibration isolators with an isolation efficiency of no less than 95%.
   d. Compressor speed shall not exceed 1750 rpm.
   e. Compressor shall unload using suction cutoff unloading (electrical solenoid unloading shall be available as an accessory).
   f. Compressor shall include overload protection.
   g. Compressor shall be equipped with internal high discharge temperature protection (566E180 and 240 only).
2. 566E150-240 Units:
   a. Compressors shall be of the hermetic scroll type.
   b. Compressors shall be mounted on vibration isolators.
   c. Compressors shall include overload protection.
   d. Compressors shall be equipped with a crankcase heater.

E. Condenser Coil:

1. Condenser coil shall be air cooled, circuited for integral subcooler.
2. Coil shall be constructed of aluminum fins mechanically bonded to copper tubes which are then cleaned, dehydrated, and sealed. Copper fins shall be available as an option.

F. Refrigeration Components:

1. Refrigeration circuit components for 566D units shall include hot gas muffler, high-side pressure relief device, liquid line shutoff valve, suction and discharge shutoff valves, holding charge of refrigerant R-22, and compressor oil.
2. Refrigeration circuit components for 566E units shall include liquid line service valve, suction line service valve, a full charge of compressor oil, and a holding charge of refrigerant.

G. Controls and Safeties:

1. Minimum control functions shall include:
   a. Power and control terminal blocks.
   b. Compressor cycle delay protection prevents the compressor from restarting for a minimum of 5 minutes after shutdown.
   c. Capacity control on the compressor shall be by suction cutoff unloader in response to compressor suction pressure. Electric solenoid unloading shall be available as an accessory (566D unit).
   d. Head pressure control by fan cycling. One condenser fan shall be cycled by discharge pressure to maintain proper head pressure.
2. Minimum safety devices shall include:

   Automatic reset (after resetting first at thermostat)
   a. High discharge-pressure cutout.
   b. Low suction pressure cutout.
   c. Condenser-fan motors to be protected against overload condition by internal overloads.

Manual reset at the unit

Electrical overload protection through the use of definite-purpose contactors and calibrated, ambient compensated, magnetic trip circuit breakers. Circuit breakers shall open all 3 phases in the event of an overload in any one of the phases or a single-phase condition.

H. Operating Characteristics:

1. The capacity of the condensing unit shall meet or exceed_____Btuh at a suction temperature of_____ F. The power consumption at full load shall not exceed_____ kW.
2. The combination of the condensing unit and the evaporator or fan coil unit shall have a total net cooling capacity of _____ Btuh or greater at conditions of _____ cfm entering-air temperature at the evaporator at _____ F wet bulb and _____ F dry bulb, and air entering the condensing unit at _____ F.
3. The system shall have an EER of _____ Btuh/Watt or greater at standard ARI conditions.

I. Electrical Requirements:

1. Nominal unit electrical characteristics shall be _____ v, 3-ph, 60 Hz. The unit shall be capable of satisfactory operation within voltage limits of _____ v to _____ v.
2. Unit electrical power shall be single point connection.
3. Unit control circuit shall contain a 24-v transformer for unit control, with capacity to operate an indoor fan interlock.

J. Special Features:

1. Low-Ambient Temperature Control (Factory-Installed Option or Field-Installed Accessory):

   Control shall regulate fan motor speed in response to the saturated condensing temperature of the unit. The control shall allow the unit to operate down to an ambient temperature of –20 F.
2. Electric Solenoid Unloader Accessory:

   Unloader valve piston, coil, and hardware shall be supplied to convert the pressure-operated compressor unloader to electric unloading.
3. Hail Guard Package:

   Hail guard package shall protect coil against hail and other flying debris.
4. Condenser Coil Grille Package:

   Grilles shall protect the condenser coils after unit installation.
5. Optional Condenser Coil Materials:

   a. Pre-Coated Aluminum-Fin Coils:

      Shall have a durable epoxy-phenolic coating to provide protection in mildly corrosive coastal environments. Coating shall be applied to the aluminum fin stock prior to the fin stamping process to create an inert barrier between the aluminum fin and copper tube. Epoxy-phenolic barrier shall minimize galvanic action between dissimilar metals.

   b. E-Coated Aluminum-Fin Coils:

      Shall have a flexible epoxy polymer coating uniformly applied to all coil surface areas without material bridging between fins. Coating process shall ensure complete coil encapsulation. Color shall be high gloss black with gloss requirements of 60° of 65-90% per ASTM D523-89. Uniform dry film thickness from 0.8 to 1.2 mil on all surface areas including fin edges. Superior hardness characteristics of 2H per ASTM D3363-92A and cross hatch adhesion of 4B-5B per ASTM D3359-93. Impact resistance shall be up to 160 in./lb (ASTM D2794-93). Humidity and water immersion resistance shall be up to a minimum of 1000 and 250 hours respectively (ASTM-D2247-92 and ASTM D870-92). Corrosion durability shall be confirmed through testing to no less than 1000 hours salt spray per ASTM B117-90. Coil construction shall be aluminum-fins mechanically bonded to copper tubes.
6. Thermostat Control Accessory:

   a. Commercial Electronic Thermostat with 7-day timeclock, auto-changeover, multi-stage capability, and large LCD temperature display.

   b. Commercial Electronic Non-programmable Thermostat with auto-changeover, multi-stage capability, and large LCD temperature display.
7. Unit-Mounted, Non-Fused Disconnect Switch:

   Shall be factory-installed, internally mounted. NEC and UL approved non-fused switch shall provide unit power shutoff. Shall be accessible from outside the unit and shall provide power off lockout capability. Not to be used when rooftop electrical rating exceeds 80 amperes.
8. Convenience Outlet:

   Shall be factory-installed and internally mounted with easily accessible 115-v female receptacle. Shall include 15 amp GFI receptacle with independent fuse protection. Voltage required to operate convenience outlet shall be provided by a factory-installed step-down transformer. Shall be accessible from outside the unit.

MODEL NUMBER NOMENCLATURE

524A P B 120 000 GC

524A — Fan Coil

Voltage
E — 460-3-60†
J — 208/230-1-60 (Sizes 072, 090 Only)
P — 208/230-3-60
T — 575-3-60

Coil Option
B — DX Cooling Coil With TXVs
C — DX High Capacity Cooling Coil With TXVs

Nominal Cooling (Tons)
072 — 6
090 — 7-1/2
120 — 10
150 — 12-1/2
180 — 15
240 — 20
300 — 25

Nominal Heating (Btuh)
000 – Not applicable (524A-B and 524A-C Cooling-Only Units)

Factory-Installed Options
GC — Unpainted, Standard Motor and Standard Drive
HC — Unpainted, Standard Motor and Medium-Static Drive (not available for 300 sizes)
TC — Unpainted, Alternate Motor and Medium-Static Drive (300 size only)
YC — Unpainted, Alternate Motor and High-Static Drive*
ED — Painted, Standard Motor and Standard Drive
FD — Painted, Standard Motor and Medium-Static Drive (not available for 300 size)
RD — Painted, Alternate Motor and Medium-Static Drive (300 size only)
WD — Painted, Alternate Motor and High-Static Drive*

Quality Assurance

Certified to ISO 9001:2000

LEGEND

DX — Direct Expansion
TXV — Thermostatic Expansion Valve

*The YC and WD option codes for all 090 size units with 208/230-1-60 voltage designate standard motor and high-static drive.
†All 524A072-150 units with an "E" voltage designation are triple voltage (i.e., 208/230/460-3-60). Size 524A180 is also triple voltage in the "E" configuration unless the alternate motor (YC or WD) option is used.

PHYSICAL DATA

524A-B,C UNITS

UNIT 524A	072	090	120	150	180	240	300
NOMINAL CAPACITY (Tons)	6	7 1/2	10	12 1/2	15	20	25
OPERATING WEIGHT (lb)							
Base Unit with TXV (3 Row/4 Row)	381/399	385/404	405/425	670/695	685/713	690/730	1020/1050
Plenum	175	175	175	225	225	225	325
Economizer	185	185	185	340	340	340	340
Hot Water Coil	195	195	195	285	285	285	345
Steam Coil	215	215	215	340	340	340	405
FANS							
Qty...Diam. (in.)	1...15	1...15	1...15	2...15	2...15	2...15	2...18
Nominal Airflow (cfm)	2400	3000	4000	5000	6000	8000	10,000
Airflow Range (cfm)	1800-3000	2250-3750	3000-5000	3750-6250	4500-7500	6000-10,000	7500-12,500
Nominal Motor Hp (Standard Motor)*							
208/230-1-60	1.3	2.4	—	—	—	—	—
208/230-3-60 and 460-3-60	2.4	2.4	2.4	2.9	3.7	5.0	7.5
575-3-60	1.0	2.0	2.0	3.0	3.0	5.0	7.5
Motor Speed (rpm)							
208/230-1-60	1725	1725	—	—	—	—	—
208/230-3-60 and 460-3-60	1725	1725	1725	1725	1725	1745	1745
575-3-60	1725	1725	1725	1725	1725	1745	1755
REFRIGERANT	R-22						
Operating charge (lb) (approx per circuit)†	3.0	3.0	1.5/1.5	2.0/2.0	2.5/2.5	3.5/3.5	4.5/4.5
DIRECT-EXPANSION COIL	Enhanced Copper Tubes, Aluminum Sine-Wave Fins						
Max Working Pressure (psig)	435						
Face Area (sq ft)	6.67	8.33	10.01	13.25	17.67	19.88	24.86
No. of Splits	1	1	2	2	2	2	2
Split Type...Percentage	—	—	Face...50/50				
No. of Circuits per Split (3 Row/4 Row)	12/12	15/15	9/9	9/12	12/16	13/18	15/20
Fins/in.	15	15	17	15	15	17	15
STEAM COIL							
Max Working Pressure (psig at 400 F)	175						
Total Face Area (sq ft)	6.67	6.67	6.67	13.33	13.33	13.33	15.0
Rows...Fins/in.	1...9	1...9	1...9	1...10	1...10	1...10	1...10
HOT WATER COIL							
Max Working Pressure (psig)	150						
Total Face Area (sq ft)	6.67	6.67	6.67	13.33	13.33	13.33	15.0
Rows...Fins/in.	2...8.5	2...8.5	2...8.5	2...8.5	2...8.5	2...8.5	2...12.5
Water Volume							
(gal)	8.3			13.9			14.3
(ft^3)	1.1			1.85			1.90
PIPING CONNECTIONS							
Quantity...Size (in.)							
DX Coil — Suction (ODF)	1...1 1/8	1...1 1/8	2...1 1/8	2...1 1/8	2...1 1/8	2...1 1/8	2...1 3/8
DX Coil — Liquid Refrigerant (ODF)	1...5/8			2...5/8			
Steam Coil, In (MPT)	1...2 1/2			1...2 1/2			
Steam Coil, Out (MPT)	1...1 1/2			1...1 1/2			
Hot Water Coil, In (MPT)	1...1 1/2		1...1 1/2	1...2			
Hot Water Coil, Out (MPT)	1...1 1/2		1...1 1/2	1...2			
Condensate (PVC)	1...1 1/4 ODM/1 IDF						
FILTERS	Throwaway — Factory Supplied						
Quantity...Size (in.)	4...16 x 24 x 2			4...16 x 20 x 2 4...16 x 24 x 2			4...20 x 24 x 2 4...20 x 25 x 2
Access Location	Right or Left Side						

LEGEND

DX — Direct Expansion
TXV — Thermostatic Expansion Valve

*Refer to Alternate Fan Motor Data table, page 80, for alternate motor data.
†Units are shipped without refrigerant charge.

UNIT	UNIT WEIGHT (lb)
524A-B072	381
524A-B090	385
524A-B120	405
524A-C072	399
524A-C090	404
524A-C120	425

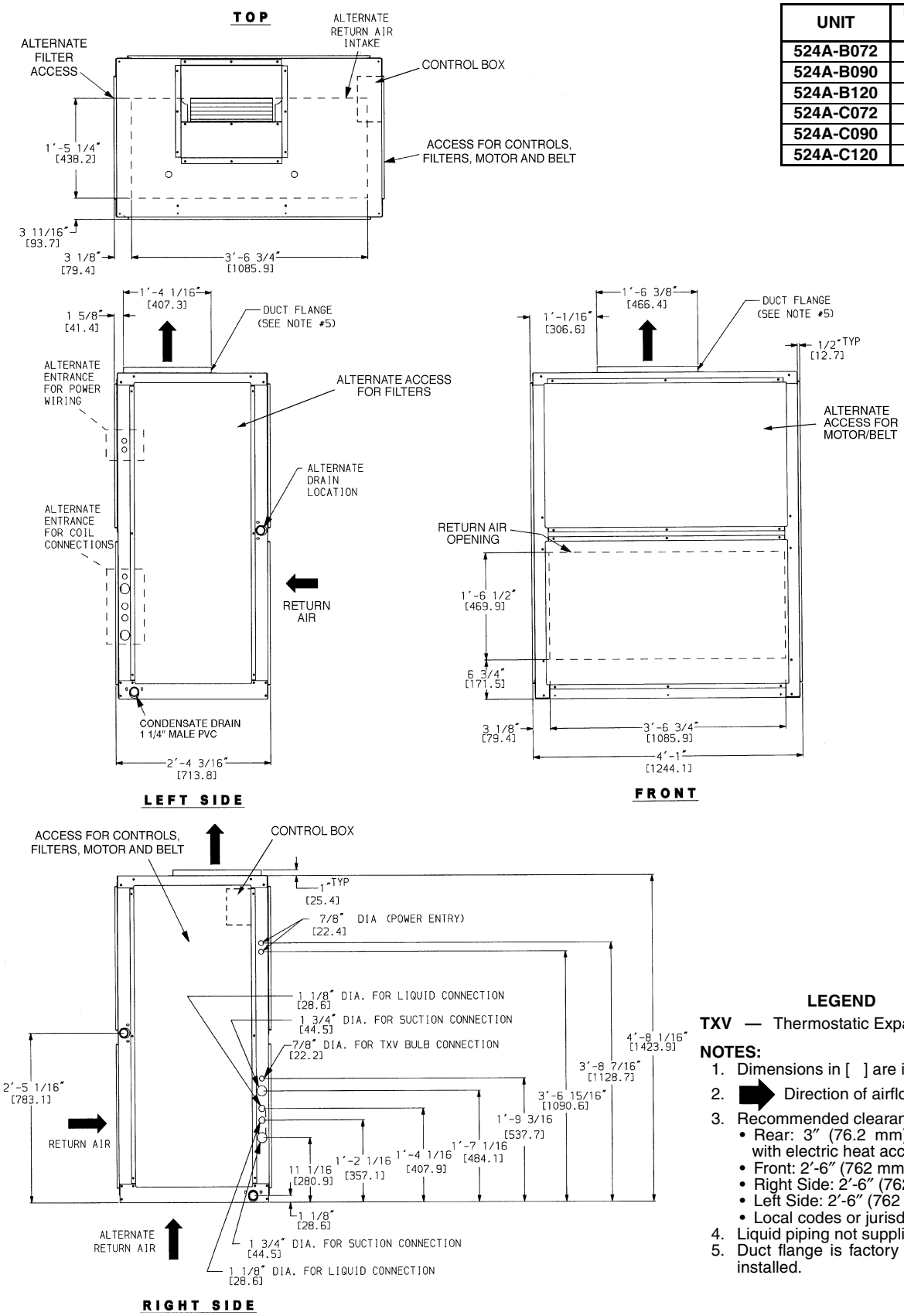

LEGEND

TXV — Thermostatic Expansion Valve

NOTES:

1. Dimensions in [ ] are in millimeters.
2. ➡ Direction of airflow.
3. Recommended clearance:
   - Rear: 3″ (76.2 mm) (2′-6″ [762 mm] with electric heat accessory)
   - Front: 2′-6″ (762 mm)
   - Right Side: 2′-6″ (762 mm)
   - Left Side: 2′-6″ (762 mm)
   - Local codes or jurisdiction may prevail.
4. Liquid piping not supplied by Bryant.
5. Duct flange is factory supplied and field installed.

524A-B,C072-120

UNIT 524A	UNIT WEIGHT (lb)
B150	670
B180	685
B240	690
C150	695
C180	713
C240	730

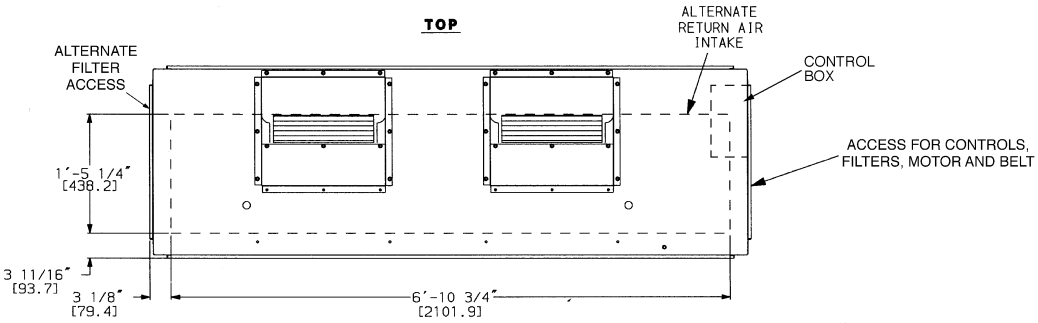

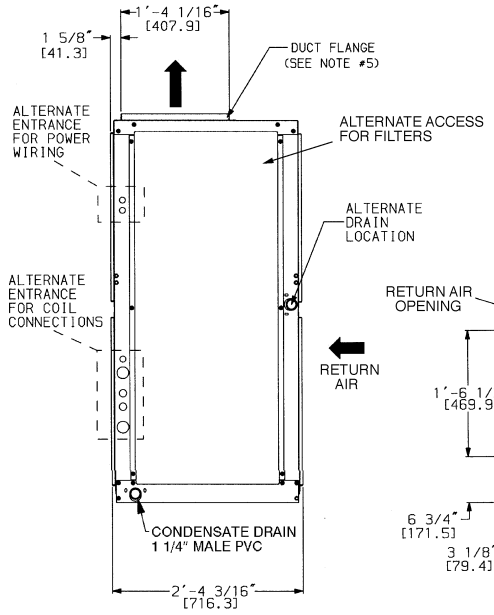

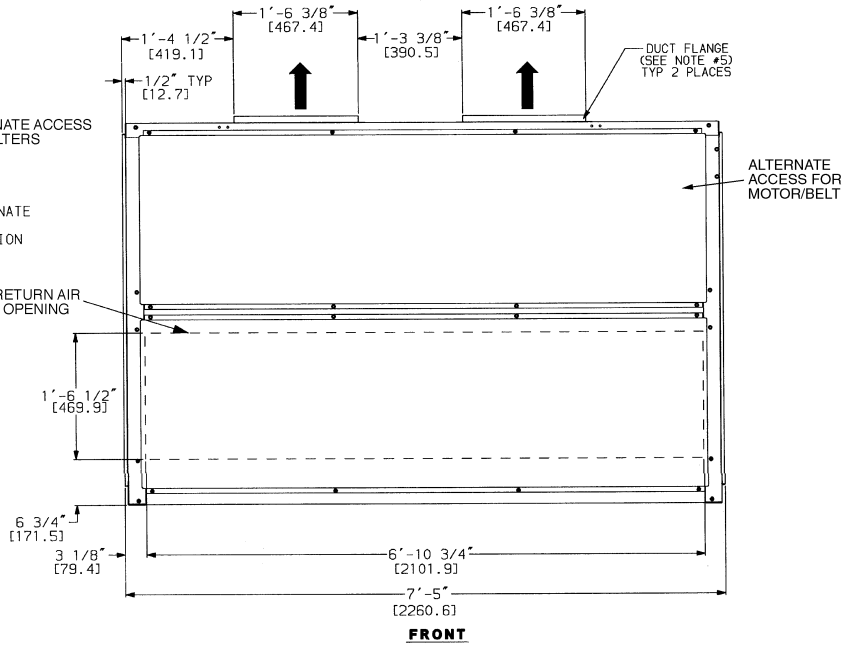

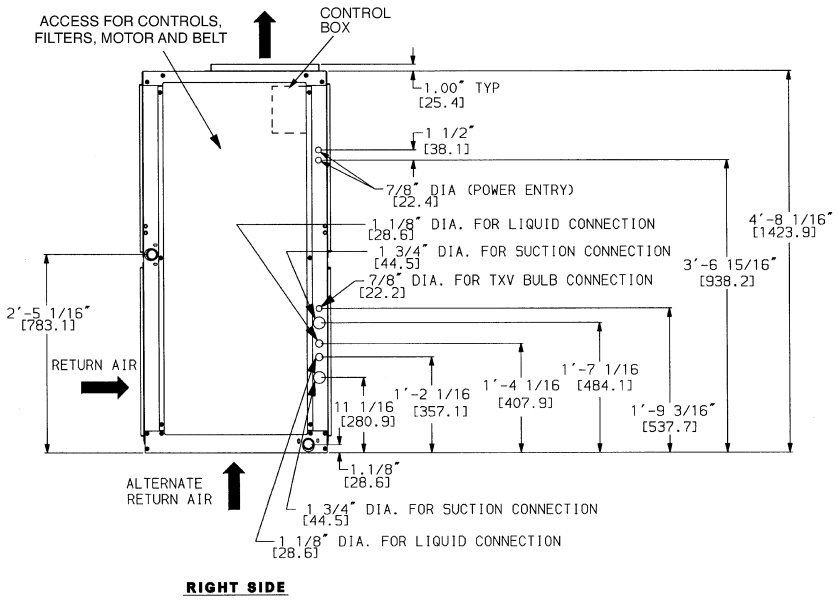

LEGEND

TXV — Thermostatic Expansion Valve

NOTES:

1. Dimensions in [ ] are in millimeters.
2. ➡ Direction of airflow.
3. Recommended clearance:
   - Rear: 3″ (76.2 mm) (2′-6″ [762 mm] with electric heat accessory)
   - Front: 2′-6″ (762 mm)
   - Right Side: 2′-6″ (762 mm)
   - Left Side: 2′-6″ (762 mm)
   - Local codes or jurisdiction may prevail.
4. Liquid piping not supplied by Bryant.
5. Duct flange is factory supplied and field installed.

524A-B,C150-240

UNIT 524A	UNIT WEIGHT (lb)
B300	1020
C300	1050

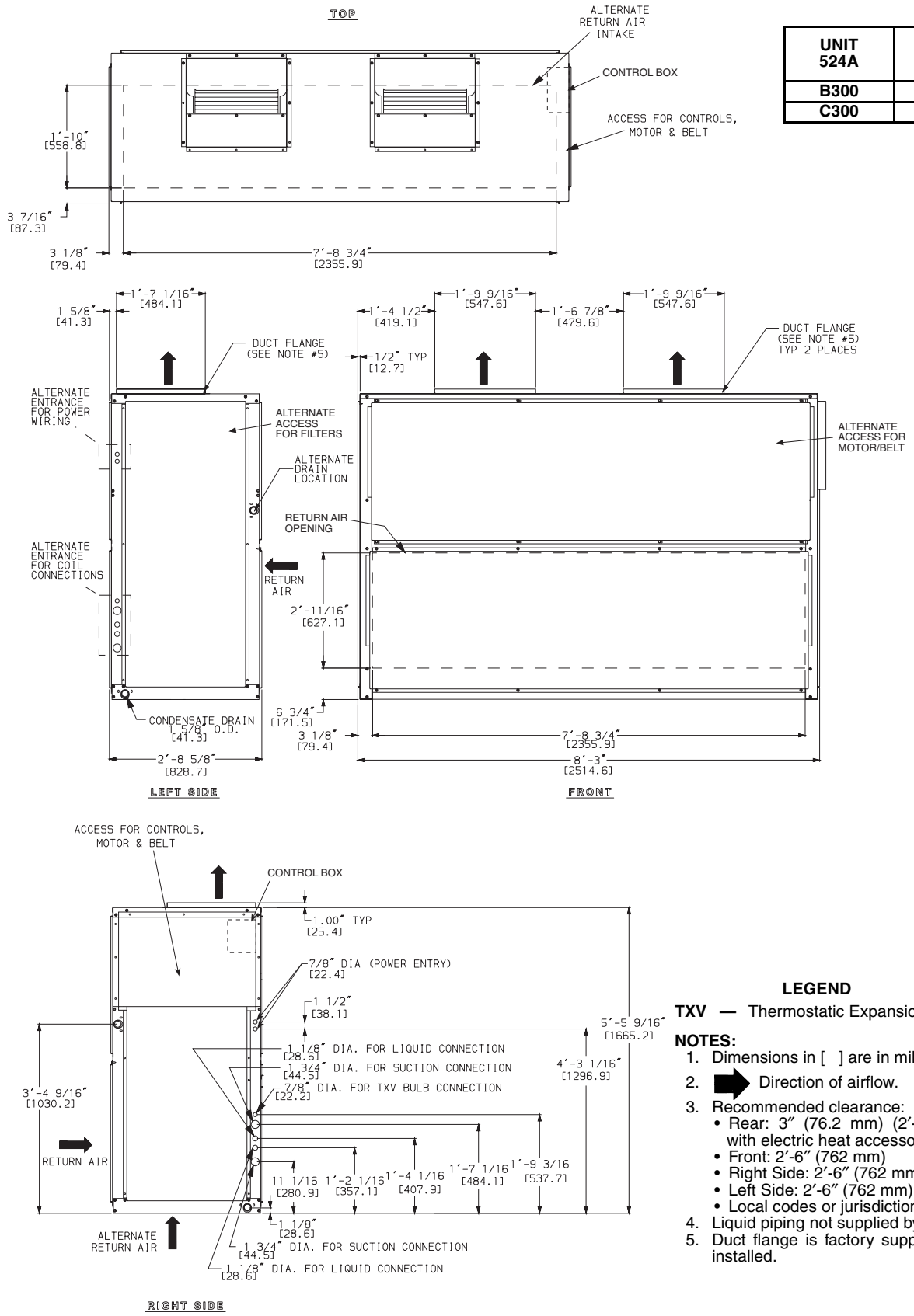

LEGEND

TXV — Thermostatic Expansion Valve

NOTES:

1. Dimensions in [ ] are in millimeters.
2. ➡ Direction of airflow.
3. Recommended clearance:
   - Rear: 3″ (76.2 mm) (2′-6″ [762 mm] with electric heat accessory)
   - Front: 2′-6″ (762 mm)
   - Right Side: 2′-6″ (762 mm)
   - Left Side: 2′-6″ (762 mm)
   - Local codes or jurisdiction may prevail.
4. Liquid piping not supplied by Bryant.
5. Duct flange is factory supplied and field installed.

524A-B,C300

PERFORMANCE DATA

524A-B FAN PERFORMANCE DATA — 0.0-1.2 in. wg ESP

UNIT 524A-B	AIRFLOW (Cfm)	EXTERNAL STATIC PRESSURE (in. wg)													
		0.0		0.2		0.4		0.6		0.8		1.0		1.2	
		Rpm	Bhp	Rpm	Bhp	Rpm	Bhp	Rpm	Bhp	Rpm	Bhp	Rpm	Bhp	Rpm	Bhp
072	1,800	399	0.19	454	0.24	548	0.35	634	0.47	713	0.60	785	0.74	850	0.89
	2,100	446	0.28	497	0.34	583	0.46	660	0.59	733	0.73	802	0.88	867	1.05
	2,400	498	0.40	541	0.47	622	0.60	693	0.74	760	0.89	824	1.05	885	1.22
	2,700	544	0.55	588	0.63	663	0.78	730	0.93	792	1.09	851	1.26	909	1.44
	3,000	594	0.73	635	0.82	707	0.99	770	1.15	828	1.32	883	1.50	937	1.69
090	2,250	273	0.08	493	0.37	580	0.49	656	0.62	727	0.76	794	0.92	858	1.08
	2,600	322	0.15	540	0.52	622	0.66	693	0.81	757	0.96	819	1.12	878	1.29
	3,000	552	0.65	595	0.73	673	0.91	740	1.07	800	1.24	856	1.41	910	1.60
	3,400	615	0.91	653	1.01	726	1.21	789	1.40	846	1.59	899	1.78	950	1.97
	3,750	671	1.20	706	1.31	773	1.53	834	1.74	889	1.95	940	2.16	988	2.37
120	3,000	399	0.29	573	0.69	654	0.86	722	1.03	784	1.19	841	1.37	896	1.55
	3,500	604	0.92	641	1.02	714	1.22	780	1.42	838	1.61	892	1.81	942	2.01
	4,000	680	1.33	713	1.45	778	1.68	839	1.91	896	2.14	947	2.36	995	2.58
	4,500	756	1.86	787	1.99	845	2.26	901	2.52	955	2.78	1005	3.03	1051	3.28
	5,000	834	2.51	861	2.67	914	2.96	966	3.25	1180	3.54	1064	3.82	1109	4.11
150	3,750	394	0.40	453	0.52	558	0.80	643	1.10	717	1.39	785	1.71	848	2.04
	4,300	436	0.57	487	0.70	586	1.00	670	1.34	742	1.67	806	2.01	867	2.36
	5,000	492	0.86	535	0.99	623	1.31	704	1.69	775	2.08	838	2.47	896	2.86
	5,700	550	1.23	587	1.37	664	1.71	740	2.11	809	2.55	872	2.99	929	3.43
	6,250	596	1.59	630	1.74	700	2.09	770	2.51	837	2.97	899	3.45	955	3.94
180	4,500	428	0.59	475	0.70	570	0.99	656	1.33	730	1.68	796	2.02	856	2.38
	5,300	488	0.92	528	1.04	609	1.34	689	1.71	762	2.11	827	2.51	886	2.92
	6,000	542	1.29	578	1.43	649	1.74	721	2.11	791	2.55	855	3.00	914	3.46
	6,800	604	1.83	637	1.99	700	2.32	763	2.70	826	3.15	888	3.64	946	4.15
	7,500	660	2.42	690	2.59	747	2.95	804	3.34	861	3.79	919	4.29	975	4.83
240	6,000	532	1.25	569	1.39	639	1.69	711	2.06	781	2.48	846	2.93	905	3.39
	7,000	608	1.93	641	2.09	702	2.42	763	2.80	824	3.23	885	3.71	943	4.23
	8,000	686	2.83	716	3.01	770	3.38	823	3.77	876	4.21	930	4.70	983	5.24
	9,000	764	3.97	791	4.18	841	4.59	888	5.02	935	5.47	982	5.96	1030	6.51
	10,000	843	5.38	868	5.62	914	6.09	957	6.55	1000	7.02	1042	7.53	1084	8.08
300	7,500	456	1.29	490	1.47	556	1.85	621	2.25	678	2.64	729	3.06	778	3.60
	8,750	521	1.98	551	2.18	608	2.61	664	3.07	720	3.53	770	3.99	816	4.45
	10,000	587	2.88	614	3.11	664	3.59	714	4.09	763	4.62	812	5.15	857	5.68
	11,250	653	4.03	678	4.29	724	4.82	768	5.37	812	5.95	856	6.54	899	7.14
	12,500	720	5.46	743	5.75	785	6.33	825	6.93	865	7.55	904	8.20	944	8.86

See Legend and Notes on page 67.

PERFORMANCE DATA (cont)

524A-B FAN PERFORMANCE DATA — 1.4-2.4 in. wg ESP

UNIT 524A-B	AIRFLOW (Cfm)	EXTERNAL STATIC PRESSURE (in. wg)											
		1.4		1.6		1.8		2.0		2.2		2.4	
		Rpm	Bhp	Rpm	Bhp	Rpm	Bhp	Rpm	Bhp	Rpm	Bhp	Rpm	Bhp
072	**1,800**	910	1.04	965	1.20	1180	1.36	1065	1.52	**1111**	**1.69**	**1155**	**1.86**
	2,100	927	1.21	983	1.38	1035	1.56	1084	1.74	**1131**	**1.92**	**1175**	**2.11**
	2,400	944	1.41	999	1.59	1052	1.78	**1101**	**1.98**	**1149**	**2.18**	**1193**	**2.38**
	2,700	964	1.63	1018	1.82	1069	2.03	**1118**	**2.24**	**1165**	**2.45**	—	—
	3,000	989	1.89	1039	2.10	**1089**	**2.31**	**1136**	**2.53**	**1183**	**2.76**	—	—
090	**2,250**	918	1.26	975	1.43	1029	1.62	1079	1.80	1126	1.99	1172	2.18
	2,600	936	1.48	991	1.67	1044	1.87	1094	2.07	1142	2.28	1188	2.49
	3,000	963	1.79	1150	1.99	1064	2.20	1113	2.42	1159	2.64	—	—
	3,400	998	2.18	1045	2.39	1092	2.61	1137	2.83	1182	3.07	—	—
	3,750	1360	2.58	1078	2.80	1122	3.03	1164	3.27	—	—	—	—
120	**3,000**	949	1.74	1000	1.93	1050	2.14	1099	2.36	1147	2.58	1192	2.81
	3,500	990	2.21	1037	2.42	1083	2.64	1128	2.86	1172	3.10	—	—
	4,000	1040	2.80	1084	3.03	1126	3.26	1167	3.50	—	—	—	—
	4,500	1094	3.53	1136	3.78	1176	4.03	—	—	—	—	—	—
	5,000	1151	4.39	1191	4.66	—	—	—	—	—	—	—	—
150	**3,750**	909	2.37	968	2.74	1026	3.12	1080	3.51	**1131**	**3.92**	**1181**	**4.32**
	4,300	925	2.73	980	3.11	1360	3.52	1084	3.92	**1135**	**4.35**	**1184**	**4.78**
	5,000	950	3.26	1002	3.67	1052	4.09	**1101**	**4.53**	**1148**	**4.98**	**1190**	**5.44**
	5,700	981	3.88	1031	4.33	1079	4.79	**1125**	**5.25**	**1169**	**5.73**	—	—
	6,250	1072	4.42	1057	4.91	**1103**	**5.40**	**1148**	**5.90**	**1191**	**6.40**	—	—
180	**4,500**	912	2.75	967	3.13	1019	3.52	1070	3.92	1120	4.35	1168	4.79
	5,300	940	3.33	992	3.75	1041	4.18	1088	4.61	1134	5.06	**1179**	**5.52**
	6,000	968	3.92	1018	4.38	1066	4.85	1112	5.32	1156	5.80	**1198**	**6.29**
	6,800	1000	4.67	1050	5.19	1097	5.71	1142	6.23	**1185**	**6.76**	—	—
	7,500	1300	5.39	1078	5.97	1125	6.54	1170	7.11	—	—	—	—
240	**6,000**	954	3.83	1005	4.27	1052	4.72	1098	5.22	1142	5.67	—	—
	7,000	990	4.74	1040	5.24	1090	5.80	1135	6.30	1176	6.84	—	—
	8,000	1300	5.79	1078	6.38	1130	7.00	1173	7.60	—	—	—	—
	9,000	1073	7.11	1120	7.72	1169	8.37	—	—	—	—	—	—
	10,000	1126	8.75	1166	9.37	—	—	—	—	—	—	—	—
300	**7,500**	831	4.41	870	5.10	913	5.90	950	6.88	985	7.70	—	—
	8,750	859	4.97	901	5.59	944	6.42	980	7.20	1020	8.10	—	—
	10,000	900	6.20	939	6.74	976	7.33	1013	8.00	1050	8.82	—	—
	11,250	941	7.73	980	8.32	1017	8.90	1052	9.51	**1086**	**10.16**	—	—
	12,500	984	9.53	1022	10.19	1058	10.84	**1093**	**11.49**	—	—	—	—

LEGEND

Bhp — Brake Horsepower Input to Fan
ESP — External Static Pressure

Bold indicates field-supplied drive is required.
Plain type indicates standard motor and standard drive.
Underline indicates a different motor and drive combination other than the standard motor and standard drive combination is required. Refer to fan motor and drive tables, pages 79-81, to complete selection.

NOTES:

1. Maximum allowable fan speed is 1100 rpm for unit size 300; 1200 rpm for all other sizes.
2. Fan performance is based on deductions for wet coil, clean 2-in. filters, and unit casing. See table on page 70 for factory-supplied filter pressure drop.
3. The medium-static drive and standard motor combination is not available for 300 size. Use alternate motor if medium-static drive is required for these sizes.

FAN PERFORMANCE DATA — 524A-C WITH HIGH CAPACITY COIL — 0.0-1.2 in. wg ESP

UNIT 524A-C (High-Capacity 4-Row Coil)	AIRFLOW (Cfm)	EXTERNAL STATIC PRESSURE (in. wg)													
		0.0		0.2		0.4		0.6		0.8		1.0		1.2	
		Rpm	Bhp	Rpm	Bhp	Rpm	Bhp	Rpm	Bhp	Rpm	Bhp	Rpm	Bhp	Rpm	Bhp
072	1,800	419	0.21	471	0.26	564	0.37	649	0.49	727	0.63	797	0.77	862	0.92
	2,100	471	0.31	519	0.37	602	0.49	679	0.62	751	0.77	819	0.92	882	1.09
	2,400	524	0.44	568	0.51	645	0.64	715	0.79	781	0.94	844	1.11	905	1.28
	2,700	578	0.61	619	0.69	690	0.84	755	0.99	816	1.15	875	1.33	932	1.51
	3,000	633	0.81	671	0.90	738	1.07	799	1.24	856	1.41	910	1.60	963	1.79
090	2,250	290	0.10	510	0.39	594	0.51	669	0.65	739	0.79	806	0.95	870	1.12
	2,600	349	0.19	561	0.55	640	0.70	709	0.84	773	1.00	834	1.16	893	1.34
	3,000	579	0.70	621	0.79	695	0.96	759	1.12	818	1.30	874	1.47	928	1.66
	3,400	646	0.99	683	1.09	752	1.29	813	1.48	869	1.67	920	1.86	970	2.06
	3,750	705	1.31	739	1.42	804	1.63	862	1.85	915	2.05	964	2.26	1011	2.48
120	3,000	421	0.35	592	0.73	670	0.90	737	1.06	797	1.23	854	1.41	908	1.59
	3,500	626	0.98	664	1.08	735	1.28	798	1.48	855	1.67	908	1.87	958	2.07
	4,000	706	1.42	738	1.54	803	1.77	862	2.00	917	2.23	967	2.45	1150	2.67
	4,500	786	1.99	815	2.12	873	2.39	929	2.65	980	2.90	1300	3.16	1073	3.41
	5,000	867	2.70	893	2.84	946	3.14	997	3.43	1046	3.72	1092	4.00	1135	4.28
150	3,750	410	0.43	467	0.55	567	0.83	649	1.12	721	1.41	788	1.72	851	2.05
	4,300	455	0.62	504	0.74	599	1.05	679	1.38	748	1.70	811	2.04	871	2.39
	5,000	514	0.92	556	1.06	641	1.39	718	1.76	786	2.14	847	2.52	903	2.91
	5,700	575	1.32	612	1.47	686	1.82	759	2.23	825	2.66	884	3.09	939	3.52
	6,250	624	1.71	657	1.87	725	2.24	793	2.66	856	3.12	915	3.59	969	4.06
180	4,500	437	0.61	483	0.72	576	1.01	660	1.35	732	1.69	797	2.03	856	2.38
	5,300	499	0.95	538	1.07	617	1.37	696	1.74	767	2.13	830	2.53	888	2.94
	6,000	555	1.34	590	1.48	659	1.79	730	2.17	798	2.59	860	3.04	918	3.49
	6,800	620	1.91	651	2.06	712	2.39	774	2.78	836	3.22	896	3.71	952	4.21
	7,500	677	2.52	706	2.69	761	3.04	817	3.44	873	3.89	929	4.39	984	4.93
240	6,000	542	1.29	577	1.42	646	1.72	716	2.09	785	2.51	849	2.95	907	3.40
	7,000	620	1.99	652	2.15	711	2.48	771	2.85	831	3.28	890	3.76	947	4.27
	8,000	700	2.92	728	3.10	781	3.46	833	3.85	885	4.29	938	4.78	990	5.32
	9,000	781	4.10	806	4.30	854	4.71	900	5.13	946	5.58	993	6.08	1039	6.62
	10,000	862	5.56	885	5.79	929	6.24	971	6.70	1120	7.18	1054	7.69	1096	8.24
300	7,500	476	1.39	510	1.58	579	1.99	644	2.40	701	2.81	752	3.29	804	3.96
	8,750	545	2.14	574	2.35	633	2.81	691	3.29	747	3.77	797	4.25	842	4.76
	10,000	615	3.12	641	3.36	692	3.87	743	4.41	794	4.96	843	5.51	888	6.05
	11,250	685	4.37	709	4.64	754	5.20	800	5.79	845	6.40	891	7.02	935	7.64
	12,500	756	5.92	778	6.22	819	6.83	860	7.47	901	8.14	942	8.83	983	9.52

See Legend and Notes on page 69.

PERFORMANCE DATA (cont)

FAN PERFORMANCE DATA — 524A-C WITH HIGH CAPACITY COIL — 1.4-2.4 in. wg ESP

UNIT 524A-C (High-Capacity 4-Row Coil)	AIRFLOW (Cfm)	EXTERNAL STATIC PRESSURE (in. wg)											
		1.4		1.6		1.8		2.0		2.2		2.4	
		Rpm	Bhp	Rpm	Bhp	Rpm	Bhp	Rpm	Bhp	Rpm	Bhp	Rpm	Bhp
072	**1,800**	921	1.07	975	1.23	1026	1.39	1074	1.55	**1120**	**1.72**	**1164**	**1.90**
	2,100	942	1.26	997	1.43	1048	1.61	**1097**	**1.79**	**1143**	**1.97**	**1186**	**2.16**
	2,400	963	1.47	1017	1.66	1069	1.85	**1118**	**2.05**	**1164**	**2.25**	—	—
	2,700	987	1.71	1039	1.91	**1090**	**2.12**	**1138**	**2.33**	**1185**	**2.55**	—	—
	3,000	1015	1.99	1065	2.20	**1113**	**2.42**	**1161**	**2.65**	—	—	—	—
090	**2,250**	930	1.29	986	1.47	1039	1.65	1089	1.84	1136	2.03	1181	2.22
	2,600	950	1.53	1005	1.72	1057	1.92	1107	2.13	1154	2.33	—	—
	3,000	980	1.86	1031	2.06	1081	2.27	1129	2.49	1175	2.72	—	—
	3,400	1018	2.26	1065	2.48	1111	2.70	1156	2.93	—	—	—	—
	3,750	1057	2.69	1101	2.92	1144	3.15	1186	3.39	—	—	—	—
120	**3,000**	961	1.78	1120	1.98	1062	2.19	1111	2.41	1158	2.64	—	—
	3,500	1005	2.27	1052	2.49	1098	2.71	1142	2.94	1186	3.18	—	—
	4,000	1058	2.90	1101	3.13	1143	3.36	1184	3.60	—	—	—	—
	4,500	1116	3.66	1157	3.91	1196	4.16	—	—	—	—	—	—
	5,000	1176	4.56	—	—	—	—	—	—	—	—	—	—
150	**3,750**	912	2.39	971	2.76	1300	3.14	1083	3.54	**1135**	**3.95**	**1185**	**4.36**
	4,300	928	2.75	982	3.13	1036	3.53	1087	3.94	**1138**	**4.37**	**1187**	**4.81**
	5,000	956	3.30	1072	3.71	1056	4.13	**1104**	**4.56**	**1151**	**5.00**	**1196**	**5.46**
	5,700	990	3.96	1039	4.40	1086	4.85	**1130**	**5.31**	**1174**	**5.78**	—	—
	6,250	1019	4.54	1067	5.02	**1112**	**5.50**	**1156**	**5.99**	**1198**	**6.49**	—	—
180	**4,500**	912	2.75	967	3.12	1019	3.52	1070	3.92	1120	4.35	1168	4.79
	5,300	942	3.34	992	3.76	1041	4.18	1088	4.61	1134	5.06	**1179**	**5.52**
	6,000	971	3.95	1020	4.40	1067	4.86	1112	5.33	1156	5.81	**1198**	**6.29**
	6,800	1005	4.72	1054	5.23	1101	5.75	1145	6.27	**1187**	**6.79**	—	—
	7,500	1036	5.48	1084	6.04	1131	6.61	**1174**	**7.17**	—	—	—	—
240	**6,000**	961	3.86	1011	4.31	1058	4.77	1104	5.24	1147	5.71	—	—
	7,000	1000	4.79	1050	5.32	1097	5.85	1142	6.38	1184	6.91	—	—
	8,000	1041	5.88	1090	6.47	1137	7.07	1181	7.67	—	—	—	—
	9,000	1086	7.21	1133	7.82	1178	8.47	—	—	—	—	—	—
	10,000	1138	8.83	1240	9.46	—	—	—	—	—	—	—	—
300	**7,500**	874	5.33	897	5.91	940	6.80	990	7.50	—	—	—	—
	8,750	886	5.36	930	6.13	982	7.32	1020	8.10	—	—	—	—
	10,000	930	6.60	969	7.20	1072	7.89	1045	8.71	—	—	—	—
	11,250	976	8.25	1150	8.86	1051	9.49	**1086**	**10.17**	—	—	—	—
	12,500	1023	10.20	1061	10.88	**1097**	**11.56**	—	—	—	—	—	—

LEGEND

Bhp — Brake Horsepower Input to Fan
ESP — External Static Pressure

Bold indicates field-supplied drive is required.
Plain type indicates standard motor and standard drive.
Underline indicates a different motor and drive combination other than the standard motor and standard drive combination is required. Refer to fan motor and drive tables, pages 79-81, to complete selection.

NOTES:

1. Maximum allowable fan speed is 1100 rpm for unit size 300; 1200 rpm for all other sizes.
2. Fan performance is based on deductions for wet coil, clean 2-in. filters, and unit casing. See table on page 70 for factory-supplied filter pressure drop.
3. The medium-static drive and standard motor combination is not available for 300 size. Use alternate motor if medium-static drive is required for these sizes.

PERFORMANCE DATA (cont)

FACTORY-SUPPLIED FILTER PRESSURE DROP

UNIT 524A-B 524A-C	AIRFLOW (Cfm)	PRESSURE DROP (in. wg)
072	1,800 2,400 3,000	0.05 0.08 0.11
090	2,250 3,000 3,750	0.07 0.11 0.15
120	3,000 4,000 5,000	0.11 0.17 0.23
150	3,750 5,000 6,250	0.06 0.10 0.13
180	4,500 6,000 7,500	0.08 0.12 0.17
240	6,000 8,000 10,000	0.12 0.19 0.26
300	7,500 10,000 12,500	0.15 0.22 0.30

ACCESSORY PLENUM AIR THROW DATA

UNIT 524A	AIRFLOW (Cfm)	VANE DEFLECTION		
		Straight	21½°	45°
072	**2,400**	39	33	24
090	**3,000**	45	38	28
102	**3,400**	49	41	30
120	**4,000**	55	46	33
150	**5,000**	45	38	28
180	**6,000**	50	43	31
240	**8,000**	60	51	37
300	**10,000**	76	65	47

Throw distances shown are for 75 fpm terminal velocity. Use the following multipliers to determine throw values for other terminal velocities.

TERMINAL VELOCITY (Fpm)	THROW FACTOR
50	X 1.50
100	X 0.75
150	X 0.50

ACCESSORY PRESSURE DROP (in. wg)

UNIT 524A	AIRFLOW (Cfm)	DISCHARGE PLENUM	RETURN AIR GRILLE	HEATING COILS			ECONOMIZER
				Hot Water	Steam	Electric	
072	**1,800** **2,400** **3,000**	0.06 0.10 0.14	0.01 0.01 0.02	0.10 0.16 0.23	0.10 0.16 0.23	0.04 0.06 0.10	0.05 0.07 0.09
090	**2,250** **3,000** **3,750**	0.09 0.14 0.21	0.01 0.02 0.03	0.15 0.23 0.35	0.15 0.23 0.35	0.06 0.10 0.15	0.06 0.09 0.15
102	**2,550** **3,400** **4,250**	0.11 0.17 0.24	0.02 0.03 0.04	0.18 0.28 0.41	0.18 0.28 0.41	0.07 0.12 0.19	0.07 0.13 0.19
120	**3,000** **4,000** **5,000**	0.14 0.22 0.32	0.02 0.04 0.06	0.23 0.37 0.53	0.23 0.37 0.53	0.10 0.17 0.26	0.09 0.17 0.28
150	**3,750** **5,000** **6,250**	0.07 0.12 0.17	0.01 0.02 0.02	0.11 0.17 0.25	0.11 0.17 0.25	0.04 0.07 0.11	0.05 0.07 0.11
180	**4,500** **6,000** **7,500**	0.10 0.16 0.23	0.01 0.02 0.03	0.15 0.23 0.33	0.15 0.23 0.33	0.06 0.10 0.15	0.06 0.09 0.15
240	**6,000** **8,000** **10,000**	0.16 0.26 0.37	0.02 0.04 0.06	0.23 0.37 0.53	0.23 0.37 0.53	0.10 0.17 0.26	0.09 0.17 0.28
300	**7,500** **10,000** **12,500**	0.15 0.24 0.34	0.02 0.03 0.05	0.28 0.44 0.63	0.28 0.44 0.63	0.09 0.16 0.24	0.06 0.09 0.14

PERFORMANCE DATA (cont)

HYDRONIC HEATING CAPACITIES

UNIT 524A-B 524A-C	AIRFLOW (Cfm)	1-ROW STEAM*		2-ROW HOT WATER COIL†			
		Cap.	Ldb	Cap.	Ldb	Water Flow (Gpm)	PD
072	1,800	146	134	156.0	140	15.6	3.4
	2,400	173	126	183.0	131	18.3	4.3
	3,000	209	123	206.0	124	20.6	5.2
090	2,250	168	129	174.0	133	17.4	4.0
	3,000	209	123	206.0	124	20.6	5.2
	3,750	240	117	238.0	118	23.8	6.5
120	3,000	209	123	299.0	152	29.9	5.0
	4,000	243	115	275.0	124	27.5	6.6
	5,000	279	111	316.0	119	31.6	8.2
150	3,750	370	150	362.0	149	36.2	4.2
	5,000	425	137	409.0	136	40.9	5.1
	6,250	465	128	456.0	128	45.6	6.0
180	4,500	402	141	412.0	145	41.2	4.5
	6,000	458	129	471.0	133	47.1	5.5
	7,500	479	118	529.0	125	52.9	6.6
240	6,000	458	129	506.0	138	50.6	5.1
	8,000	487	115	584.0	128	58.4	6.3
	10,000	499	105	652.0	120	65.2	7.5
300	7,500	511	122	649.0	140	64.9	5.7
	10,000	575	112	752.0	130	75.2	7.1
	12,500	626	106	842.0	122	84.2	8.5

LEGEND

Cap. — Capacity (Btuh in thousands)
Lab — Leaving-Air Dry-Bulb Temp (F)
PD — Pressure Drop (ft water)

*Based on 5 psig steam, 60 F entering-air temperature. All steam coils are non-freeze type.
†Based on 200 F entering water, 20 F water temperature drop, 60 F entering-air temperature.

NOTES:

1. Maximum operating limits for heating coils: 20 psig at 260 F.
2. Leaving db = ent db (F) + $\frac{\text{Capacity (Btuh)}}{1.1 \times \text{cfm}}$
3. See Heating Correction Factors table.

HEATING CORRECTION FACTORS

HOT WATER COIL						
Water Temp Drop (F)	Ent Water Temp (F)	Entering-Air Temp (F)				
		40	50	60	70	80
10	140	0.72	0.64	0.57	0.49	0.41
	160	0.89	0.81	0.74	0.66	0.58
	240	1.06	0.98	0.90	0.83	0.75
	200	1.22	1.15	1.07	1.00	0.92
	220	1.39	1.32	1.24	1.17	1.09
20	140	0.64	0.57	0.49	0.41	0.33
	160	0.81	0.74	0.66	0.58	0.51
	240	0.98	0.91	0.83	0.75	0.68
	200	1.15	1.08	1.00	0.93	0.85
	220	1.32	1.25	1.17	1.10	1.02
30	140	0.56	0.49	0.41	0.33	0.24
	160	0.74	0.66	0.58	0.51	0.43
	240	0.91	0.83	0.76	0.68	0.60
	200	1.08	1.00	0.93	0.85	0.78
	220	1.25	1.18	1.10	1.03	0.95

STEAM COIL					
Steam Pressure (psig)	Entering-Air Temp (F)				
	40	50	60	70	80
0	1.06	0.98	0.91	0.85	0.78
2	1.09	1.02	0.95	0.89	0.82
5	1.13	1.06	1.00	0.93	0.87

NOTE: Multiply capacity given in the Hydronic Heating Capacities table by the correction factor for conditions at which unit is actually operating. Correct leaving-air temperature using formula in Note 2 of Hydronic Heating Capacities table.

ELECTRICAL DATA

524A-B,C STANDARD MOTORS

UNIT 524A-B 524A-C	V*-PH-Hz	VOLTAGE LIMITS	FAN MOTOR		POWER SUPPLY	
			Hp (kW)	FLA	Minimum Circuit Amps	MOCP
072	208/230-1-60	187-253	1.3 (0.97)	7.6	9.5	15
	208/230-3-60	187-253	2.4 (1.79)	5.2	6.5	15
	460-3-60	414-506	2.4 (1.79)	2.6	3.3	15
	575-3-60	518-632	1.0 (0.75)	1.4	1.8	15
090	208/230-1-60	187-253	2.4 (1.79)	11.0	13.8	20
	208/230-3-60	187-253	2.4 (1.79)	5.2	6.5	15
	460-3-60	414-506	2.4 (1.79)	2.6	3.3	15
	575-3-60	518-632	2.0 (1.49)	2.3	2.9	15
120	208/230-3-60	187-253	2.4 (1.79)	5.2	6.5	15
	460-3-60	414-506	2.4 (1.79)	2.6	3.3	15
	575-3-60	518-632	2.0 (1.49)	2.3	2.9	15
150	208/230-3-60	187-253	2.9 (2.16)	7.5	9.4	15
	460-3-60	414-506	2.9 (2.16)	3.4	4.3	15
	575-3-60	518-632	3.0 (2.24)	3.8	4.8	15
180	208/230-3-60	187-253	3.7 (2.76)	10.2	12.8	20
	460-3-60	414-506	3.7 (2.76)	4.8	6.0	15
	575-3-60	518-632	3.0 (2.24)	3.8	4.8	15
240	208/230-3-60	187-253	5.0 (3.73)	14.6/12.8	18.3/16.0	30/25
	460-3-60	414-506	5.0 (3.73)	6.4	8.0	15
	575-3-60	518-632	5.0 (3.73)	5.1	6.4	15
300	208/230-3-60	187-253	7.5 (5.59)	21.5/19.4	26.9/24.3	45/40
	460-3-60	414-506	7.5 (5.59)	9.7	12.1	20
	575-3-60	518-632	7.5 (5.59)	7.8	9.8	15

See Legend and Notes on page 73.

ELECTRICAL DATA (cont)

524A-B,C ALTERNATE MOTORS

UNIT 524A-B 524A-C	V*-PH-Hz	VOLTAGE LIMITS	FAN MOTOR		POWER SUPPLY	
			Hp (kW)	FLA	Minimum Circuit Amps	MOCP
072	208/230-1-60	187-253	2.4 (1.79)	11.0	13.8	20
	208/230-3-60	187-253	2.9 (2.16)	7.5	9.4	15
	460-3-60	414-506	2.9 (2.16)	3.4	4.3	15
	575-3-60	518-632	2.0 (1.49)	2.3	2.9	15
090	208/230-1-60	187-253	2.4 (1.79)	11.0	13.8	15
	208/230-3-60	187-253	2.9 (2.16)	7.5	9.4	15
	460-3-60	414-506	2.9 (2.16)	3.4	4.3	15
	575-3-60	518-632	3.0 (2.24)	3.8	4.8	15
120	208/230-3-60	187-253	3.7 (2.76)	10.2	12.8	20
	460-3-60	414-506	3.7 (2.76)	4.8	6.0	15
	575-3-60	518-632	3.0 (2.24)	3.8	4.8	15
150	208/230-3-60	187-253	3.7 (2.76)	10.2	12.7	20
	460-3-60	414-506	3.7 (2.76)	4.8	6.0	15
	575-3-60	518-632	5.0 (3.73)	5.1	6.4	15
180	208/230-3-60	187-253	5.0 (3.73)	14.6/12.8	18.3/16.0	30/25
	460-3-60	414-506	5.0 (3.73)	6.4	8.0	15
	575-3-60	518-632	5.0 (3.73)	5.1	6.4	15
240	208/230-3-60	187-253	7.5 (5.59)	21.5/19.4	26.9/24.3	45/40
	460-3-60	414-506	7.5 (5.59)	9.7	12.1	20
	575-3-60	518-632	7.5 (5.59)	7.8	9.8	15
300	208/230-3-60	187-253	10.0 (7.46)	28.2/26.8	35.3/33.5	60/60
	460-3-60	414-506	10.0 (7.46)	13.4	16.8	30
	575-3-60	518-632	10.0 (7.46)	10.3	12.9	20

LEGEND

FLA — Full Load Amps
MOCP — Maximum Overcurrent Protection

*Motors are designed for satisfactory operation within 10% of nominal voltages shown. Voltages should not exceed the limits shown in the Voltage Limits column.

NOTES:

1. Minimum circuit amps (MCA) and MOCP values are calculated in accordance with NEC (National Electrical Code) Article 440.
2. Motor FLA values are established in accordance with UL (Underwriters' Laboratories) Standard 1995.
3. **Unbalanced 3-Phase Supply Voltage**
   Never operate a motor where a phase imbalance in supply voltage is greater than 2%. Use the following formula to determine the percentage of voltage imbalance.
   % Voltage Imbalance

$$= 100 \times \frac{\text{max voltage deviation from average voltage}}{\text{average voltage}}$$

Example: Supply voltage is 460-3-60.

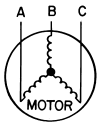

AB = 393 v
BC = 403 v
AC = 396 v

$$\text{Average Voltage} = \frac{393 + 403 + 396}{3}$$

$$= \frac{1192}{3}$$

$$= 397$$

Determine maximum deviation from average voltage.
(AB) 397 – 393 = 4 v
(BC) 403 – 397 = 6 v
(AC) 397 – 396 = 1 v

Maximum deviation is 6 v.

Determine percent of voltage imbalance.

$$\% \text{ Voltage Imbalance} = 100 \times \frac{6}{397}$$

$$= 1.5\%$$

This amount of phase imbalance is satisfactory as it is below the maximum allowable 2%.

IMPORTANT: If the supply voltage phase imbalance is more than 2%, contact your local electric utility company immediately.

ELECTRICAL DATA (cont)

ELECTRIC HEATER DATA

HEATER PART NO.	UNIT	V-PH-Hz	FAN MOTOR			ELECTRIC HEATER(S)					MCA*	MOCP*
						Nominal Capacity (kW)	Actual Capacity (kW)			FLA		
			Hp	kW	FLA		Stage 1	Stage 2	Total			
CAELHEAT001A00	524A-B072-120 524A-C072-120	208-3-60	1.3†	0.97	7.6	5	3.8	—	3.8	10.4	22.5	25
			2.4†	1.79	11.0	5	3.8	—	3.8	10.4	26.8	35
			2.4	1.79	5.2	5	3.8	—	3.8	10.4	19.5	20
			2.9	2.16	7.5	5	3.8	—	3.8	10.4	22.4	25
			3.7	2.76	10.2	5	3.8	—	3.8	10.4	25.8	30
		240-3-60	1.3†	0.97	7.6	5	5.0	—	5.0	12.0	24.5	25
			2.4†	1.79	11.0	5	5.0	—	5.0	12.0	28.8	35
			2.4	1.79	5.2	5	5.0	—	5.0	12.0	21.5	25
			2.9	2.16	7.5	5	5.0	—	5.0	12.0	24.4	25
			3.7	2.76	10.2	5	5.0	—	5.0	12.0	27.8	30
CAELHEAT002A00		480-3-60	2.4	1.79	2.6	5	5.0	—	5.0	6.00	10.8	15
			2.9	2.16	3.4	5	5.0	—	5.0	6.00	11.8	15
			3.7	2.76	4.8	5	5.0	—	5.0	6.00	13.5	15
CAELHEAT003A00		575-3-60	1.0	0.75	1.4	5	5.0	—	5.0	5.00	8.0	15
			2.0	1.49	2.3	5	5.0	—	5.0	5.00	9.2	15
			3.0	2.24	3.8	5	5.0	—	5.0	5.00	11.0	15
CAELHEAT004A00		208-3-60	1.3†	0.97	7.6	10	7.5	—	7.5	20.8	35.6	40
			2.4†	1.79	11.0	10	7.5	—	7.5	20.8	39.8	40
			2.4	1.79	5.2	10	7.5	—	7.5	20.8	32.6	35
			2.9	2.16	7.5	10	7.5	—	7.5	20.8	35.4	40
			3.7	2.76	10.2	10	7.5	—	7.5	20.8	38.8	40
		240-3-60	1.3†	0.97	7.6	10	10.0	—	10.0	24.1	39.6	40
			2.4†	1.79	11.0	10	10.0	—	10.0	24.1	43.8	50
			2.4	1.79	5.2	10	10.0	—	10.0	24.1	36.6	40
			2.9	2.16	7.5	10	10.0	—	10.0	24.1	39.4	40
			3.7	2.76	10.2	10	10.0	—	10.0	24.1	42.8	50
CAELHEAT005A00		480-3-60	2.4	1.79	2.6	10	10.0	—	10.0	12.0	18.3	20
			2.9	2.16	3.4	10	10.0	—	10.0	12.0	19.3	20
			3.7	2.76	4.8	10	10.0	—	10.0	12.0	21.0	25
CAELHEAT006A00		575-3-60	1.0	0.75	1.4	10	10.0	—	10.0	10.0	14.3	15
			2.0	1.49	2.3	10	10.0	—	10.0	10.0	15.4	20
			3.0	2.24	3.8	10	10.0	—	10.0	10.0	17.3	20
CAELHEAT007A00		208-3-60	1.3†	0.97	7.6	15	11.3	—	11.3	31.3	48.6	50
			2.4†	1.79	11.0	15	11.3	—	11.3	31.3	52.9	60
			2.4	1.79	5.2	15	11.3	—	11.3	31.3	45.6	50
			2.9	2.16	7.5	15	11.3	—	11.3	31.3	48.5	50
			3.7	2.76	10.2	15	11.3	—	11.3	31.3	51.9	60
		240-3-60	1.3†	0.97	7.6	15	15.0	—	15.0	36.1	54.6	60
			2.4†	1.79	11.0	15	15.0	—	15.0	36.1	58.9	60
			2.4	1.79	5.2	15	15.0	—	15.0	36.1	51.6	60
			2.9	2.16	7.5	15	15.0	—	15.0	36.1	54.5	60
			3.7	2.76	10.2	15	15.0	—	15.0	36.1	57.9	60
CAELHEAT008A00		480-3-60	2.4	1.79	2.6	15	15.0	—	15.0	18.0	25.8	30
			2.9	2.16	3.4	15	15.0	—	15.0	18.0	26.8	30
			3.7	2.76	4.8	15	15.0	—	15.0	18.0	28.6	30
CAELHEAT009A00		575-3-60	1.0	0.75	1.4	15	15.0	—	15.0	15.1	20.6	25
			2.0	1.49	2.3	15	15.0	—	15.0	15.1	21.7	25
			3.0	2.24	3.8	15	15.0	—	15.0	15.1	23.6	25

See Legend and Notes on page 75.

ELECTRICAL DATA (cont)

ELECTRIC HEATER DATA (cont)

HEATER PART NO.	UNIT	V-PH-Hz	FAN MOTOR			ELECTRIC HEATER(S)					MCA*	MOCP*
						Nominal Capacity (kW)	Actual Capacity (kW)			FLA		
			Hp	kW	FLA		Stage 1	Stage 2	Total			
CAELHEAT010A00	524A-B072-120 524A-C072-120	208-3-60	1.3†	0.97	7.6	25	11.3	7.5	18.8	52.1	74.7	80
			2.4†	1.79	11.0	25	11.3	7.5	18.8	52.1	78.9	80
			2.4	1.79	5.2	25	11.3	7.5	18.8	52.1	71.7	80
			2.9	2.16	7.5	25	11.3	7.5	18.8	52.1	74.5	80
			3.7	2.76	10.2	25	11.3	7.5	18.8	52.1	77.9	80
		240-3-60	1.3†	0.97	7.6	25	15.0	10.0	25.0	60.1	84.7	90
			2.4†	1.79	11.0	25	15.0	10.0	25.0	60.1	88.9	90
			2.4	1.79	5.2	25	15.0	10.0	25.0	60.1	81.7	90
			2.9	2.16	7.5	25	15.0	10.0	25.0	60.1	84.6	90
			3.7	2.76	10.2	25	15.0	10.0	25.0	60.1	87.9	90
CAELHEAT011A00		480-3-60	2.4	1.79	2.6	25	15.0	10.0	25.0	30.1	40.8	50
			2.9	2.16	3.4	25	15.0	10.0	25.0	30.1	41.8	50
			3.7	2.76	4.8	25	15.0	10.0	25.0	30.1	43.6	50
CAELHEAT012A00		575-3-60	1.0	0.75	1.4	25	15.0	10.0	25.0	25.1	33.1	35
			2.0	1.49	2.3	25	15.0	10.0	25.0	25.1	34.3	35
			3.0	2.24	3.8	25	15.0	10.0	25.0	25.1	36.1	40
CAELHEAT013A00		208-3-60	2.4†	1.79	11.0	35	15.0	11.3	26.3	73.0	105.0	110
			2.4	1.79	5.2	35	15.0	11.3	26.3	73.0	97.7	100
			2.9	2.16	7.5	35	15.0	11.3	26.3	73.0	100.6	110
			3.7	2.76	10.2	35	15.0	11.3	26.3	73.0	104.0	110
		240-3-60	2.4†	1.79	11.0	35	20.0	15.0	35.0	84.2	119.0	125
			2.4	1.79	5.2	35	20.0	15.0	35.0	84.2	111.7	125
			2.9	2.16	7.5	35	20.0	15.0	35.0	84.2	114.6	125
			3.7	2.76	10.2	35	20.0	15.0	35.0	84.2	118.0	125
CAELHEAT014A00		480-3-60	2.4	1.79	2.6	35	20.0	15.0	35.0	42.1	55.9	60
			2.9	2.16	3.4	35	20.0	15.0	35.0	42.1	56.9	60
			3.7	2.76	4.8	35	20.0	15.0	35.0	42.1	58.6	60
CAELHEAT015A00		575-3-60	2.0	1.49	2.3	35	20.0	15.0	35.0	35.1	46.8	50
			3.0	2.24	3.8	35	20.0	15.0	35.0	35.1	48.7	50

LEGEND

FLA — Full Load Amps
Hp — Horsepower
MCA — Minimum Circuit Amps
MOCP — Maximum Overcurrent Protection (Amps)

*Values shown are for single-point connection of electric heat accessory and air handler.
†Single-phase motors. All other motors are 3-phase.

NOTES:

1. Electrical resistance heaters are rated at 240 v, 480 v, or 575 v. To determine heater capacity (kW) at unit nameplate multiply the 240-v, 480-v, or 575-v capacity (kW) by the factor shown in the table below for the unit voltage.

HEATER RATING VOLTAGE	ACTUAL HEATER VOLTAGE										
	200	208	230	240	400	440	460	480	550	575	600
240	0.694	0.751	0.918	1	—	—	—	—	—	—	—
480	—	—	—	—	0.694	0.84	0.918	1	—	—	—
575	—	—	—	—	—	—	—	—	0.915	1	1.089

2. The following equation converts kW of heat energy to Btuh: kW x 3,412 = Btuh.
3. Heater contactor coils are 24 v and require 8 va holding current.
4. Electric heaters are tested and ETL approved at maximum total external static pressure of 1.9 in. wg.
5. MCA and MOCP values apply to both standard and alternate factory-supplied motors.
6. Approximate shipping weight for CAELHEAT001A00-015A00 is 55 lb each, CAELHEAT016A00-027A00 is 60 lb each, and CAELHEAT028A00-039A00 is 75 lb each.

ELECTRICAL DATA (cont)

ELECTRIC HEATER DATA (cont)

HEATER PART NO.	UNIT	V-PH-Hz	FAN MOTOR			ELECTRIC HEATER(S)					MCA*	MOCP*
						Nominal Capacity (kW)	Actual Capacity (kW)			FLA		
			Hp	kW	FLA		Stage 1	Stage 2	Total			
CAELHEAT016A00	524A-B150-240 524A-C150-240	208-3-60	2.9	2.16	7.5	10	7.5	—	7.5	20.8	35.4	40
			3.7	2.76	10.2	10	7.5	—	7.5	20.8	38.8	40
			5.0	3.73	14.6	10	7.5	—	7.5	20.8	41.3	50
			7.5	5.59	21.5	10	7.5	—	7.5	20.8	52.9	60
		240-3-60	2.9	2.16	7.5	10	10.0	—	10.0	24.1	39.4	40
			3.7	2.76	10.2	10	10.0	—	10.0	24.1	42.8	50
			5.0	3.73	12.8	10	10.0	—	10.0	24.1	46.1	50
			7.5	5.59	19.4	10	10.0	—	10.0	24.1	54.4	60
CAELHEAT017A00		480-3-60	2.9	2.16	3.4	10	10.0	—	10.0	12.0	19.3	20
			3.7	2.76	4.8	10	10.0	—	10.0	12.0	21.0	25
			5.0	3.73	6.4	10	10.0	—	10.0	12.0	23.0	25
			7.5	5.59	9.7	10	10.0	—	10.0	12.0	27.2	30
CAELHEAT018A00		575-3-60	3.0	2.24	3.8	10	10.0	—	10.0	10.0	17.3	20
			5.0	3.73	5.1	10	10.0	—	10.0	10.0	19.6	20
			7.5	5.59	7.8	10	10.0	—	10.0	10.0	22.1	25
CAELHEAT019A00		208-3-60	2.9	2.16	7.5	20	14.9	—	14.9	41.5	51.2	70
			3.7	2.76	10.2	20	14.9	—	14.9	41.5	64.6	70
			5.0	3.73	14.6	20	14.9	—	14.9	41.5	70.1	80
			7.5	5.59	21.5	20	14.9	—	14.9	41.5	78.7	80
		240-3-60	2.9	2.16	7.5	20	19.9	—	19.9	47.9	69.2	70
			3.7	2.76	10.2	20	19.9	—	19.9	47.9	72.6	80
			5.0	3.73	12.8	20	19.9	—	19.9	47.9	75.8	80
			7.5	5.59	19.4	20	19.9	—	19.9	47.9	84.1	80
CAELHEAT020A00		480-3-60	2.9	2.16	3.4	20	20.0	—	20.0	24.1	34.3	35
			3.7	2.76	4.8	20	20.0	—	20.0	24.1	36.1	40
			5.0	3.73	6.4	20	20.0	—	20.0	24.1	39.1	40
			7.5	5.59	9.7	20	20.0	—	20.0	24.1	43.2	50
CAELHEAT021A00		575-3-60	3.0	2.24	3.8	20	20.0	—	20.0	20.1	29.9	30
			5.0	3.73	5.1	20	20.0	—	20.0	20.1	31.5	35
			7.5	5.59	7.8	20	20.0	—	20.0	20.1	34.9	35
CAELHEAT022A00		208-3-60	2.9	2.16	7.5	30	15.0	7.5	22.5	62.5	87.5	90
			3.7	2.76	10.2	30	15.0	7.5	22.5	62.5	90.9	100
			5.0	3.73	14.6	30	15.0	7.5	22.5	62.5	96.4	100
			7.5	5.59	21.5	30	15.0	7.5	22.5	62.5	105.0	110
		240-3-60	2.9	2.16	7.5	30	20.0	10.0	30.0	72.2	99.6	100
			3.7	2.76	10.2	30	20.0	10.0	30.0	72.2	103.0	110
			5.0	3.73	12.8	30	20.0	10.0	30.0	72.2	106.2	110
			7.5	5.59	19.4	30	20.0	10.0	30.0	72.2	114.5	125
CAELHEAT023A00		480-3-60	2.9	2.16	3.4	30	20.0	10.0	30.0	36.1	49.4	50
			3.7	2.76	4.8	30	20.0	10.0	30.0	36.1	51.1	60
			5.0	3.73	6.4	30	20.0	10.0	30.0	36.1	53.1	60
			7.5	5.59	9.7	30	20.0	10.0	30.0	36.1	57.2	60
CAELHEAT024A00		575-3-60	3.0	2.24	3.8	30	20.0	10.0	30.0	30.1	42.4	50
			5.0	3.73	5.1	30	20.0	10.0	30.0	30.1	44.0	50
			7.5	5.59	7.8	30	20.0	10.0	30.0	30.1	47.4	50

See Legend and Notes on page 77.

ELECTRICAL DATA (cont)

ELECTRIC HEATER DATA (cont)

HEATER PART NO.	UNIT	V-PH-Hz	FAN MOTOR			ELECTRIC HEATER(S)					MCA*	MOCP*
						Nominal Capacity (kW)	Actual Capacity (kW)			FLA		
			Hp	kW	FLA		Stage 1	Stage 2	Total			
CAELHEAT025A00	524A-B180,240 524A-C180,240	208-3-60	3.7 5.0 7.5	2.76 3.73 5.59	10.2 14.6 21.5	50 50 50	22.6 22.6 22.6	15.0 15.0 15.0	37.6 37.6 37.6	104.3 104.3 104.3	143.1 148.6 157.2	150 150 175
		240-3-60	3.7 5.0 7.5	2.76 3.73 5.59	10.2 12.8 19.4	50 50 50	30.0 30.0 30.0	20.0 20.0 20.0	50.0 50.0 50.0	120.3 120.3 120.3	163.1 166.4 174.6	175 175 200
CAELHEAT026A00		480-3-60	3.7 5.0 7.5	2.76 3.73 5.59	4.8 6.4 9.7	50 50 50	30.0 30.0 30.0	20.0 20.0 20.0	50.0 50.0 50.0	60.1 60.1 60.1	81.2 83.2 87.3	90 90 90
CAELHEAT027A00		575-3-60	3.0 5.0 7.5	2.24 3.73 5.59	3.8 5.1 7.8	50 50 50	30.0 30.0 30.0	20.0 20.0 20.0	50.0 50.0 50.0	50.2 50.2 50.2	67.5 69.1 72.5	70 70 80
CAELHEAT028A00	524A-B300 524A-C300	208-3-60	7.5 10.0	5.59 7.46	19.8 28.2	20 20	14.9 14.9	— —	14.9 14.9	41.5 41.5	78.7 87.1	80 100
		240-3-60	7.5 10.0	5.59 7.46	19.4 26.8	20 20	19.9 19.9	— —	19.9 19.9	47.9 47.9	81.4 93.3	90 110
CAELHEAT029A00		480-3-60	7.5 10.0	5.59 7.46	9.7 13.4	20 20	20.0 20.0	— —	20.0 20.0	24.1 24.1	42.2 46.8	50 50
CAELHEAT030A00		575-3-60	7.5 10.0	5.59 7.46	7.8 10.3	20 20	20.0 20.0	— —	20.0 20.0	20.1 20.1	34.9 38.0	35 40
CAELHEAT031A00		208-3-60	7.5 10.0	5.59 7.46	19.8 28.0	40 40	15.0 15.0	15.0 15.0	30.0 30.0	83.4 83.4	131.1 139.5	150 150
		240-3-60	7.5 10.0	5.59 7.46	19.4 26.8	40 40	20.0 20.0	20.0 20.0	40.0 40.0	96.2 96.2	144.5 153.8	150 175
CAELHEAT032A00		480-3-60	7.5 10.0	5.59 7.46	9.7 13.4	40 40	20.0 20.0	20.0 20.0	40.0 40.0	47.9 47.9	71.9 76.6	80 80
CAELHEAT033A00		575-3-60	7.5 10.0	5.59 7.46	7.8 10.3	40 40	20.0 20.0	20.0 20.0	40.0 40.0	40.2 40.2	60.0 63.1	60 70

LEGEND

FLA — Full Load Amps
Hp — Horsepower
MCA — Minimum Circuit Amps
MOCP— Maximum Overcurrent Protection (Amps)

*Values shown are for single-point connection of electric heat accessory and air handler.

NOTES:

1. Electrical resistance heaters are rated at 240 v, 480 v, or 575 v. To determine heater capacity (kW) at unit nameplate multiply the 240-v, 480-v, or 575-v capacity (kW) by the factor shown in the table below for the unit voltage.

HEATER RATING VOLTAGE	ACTUAL HEATER VOLTAGE										
	200	208	230	240	400	440	460	480	550	575	600
240	0.694	0.751	0.918	1	—	—	—	—	—	—	—
480	—	—	—	—	0.694	0.84	0.918	1	—	—	—
575	—	—	—	—	—	—	—	—	0.915	1	1.089

2. The following equation converts kW of heat energy to Btuh: kW x 3,412 = Btuh.
3. Heater contactor coils are 24 v and require 8 va holding current.
4. Electric heaters are tested and ETL approved at maximum total external static pressure of 1.9 in. wg.
5. MCA and MOCP values apply to both standard and alternate factory-supplied motors.
6. Approximate shipping weight for CAELHEAT001A00-015A00 is 55 lb each, CAELHEAT016A00-027A00 is 60 lb each, and CAELHEAT028A00-039A00 is 75 lb each.

ELECTRICAL DATA (cont)

ELECTRIC HEATER DATA (cont)

HEATER PART NO.	UNIT	V-PH-Hz	FAN MOTOR			ELECTRIC HEATER(S)					MCA*	MOCP*
						Nominal Capacity (kW)	Actual Capacity (kW)			FLA		
			Hp	kW	FLA		Stage 1	Stage 2	Total			
CAELHEAT034A00	524A-B300 524A-C300	208-3-60	7.5 10.0	5.59 7.46	19.8 28.0	50 50	22.6 22.6	15.0 15.0	37.6 37.6	104.3 104.3	157.2 165.6	175 175
		240-3-60	7.5 10.0	5.59 7.46	19.4 26.8	50 50	30.0 30.0	20.0 20.0	50.0 50.0	120.3 120.3	174.6 183.9	200 200
CAELHEAT035A00		480-3-60	7.5 10.0	5.59 7.46	9.7 13.4	50 50	30.0 30.0	20.0 20.0	50.0 50.0	60.1 60.1	87.3 91.9	90 100
CAELHEAT036A00		575-3-60	7.5 10.0	5.59 7.46	7.8 10.3	50 50	30.0 30.0	20.0 20.0	50.0 50.0	50.2 50.2	72.5 75.6	80 80
CAELHEAT037A00		208-3-60	7.5 10.0	5.59 7.46	19.8 28.0	70 70	30.0 30.0	22.6 22.6	52.6 52.6	145.9 145.9	172.8 181.2	175 200
		240-3-60	7.5 10.0	5.59 7.46	19.4 26.8	70 70	40.0 40.0	30.0 30.0	70.0 70.0	168.4 168.4	192.6 201.9	200 225
CAELHEAT038A00		480-3-60	7.5 10.0	5.59 7.46	9.7 13.4	70 70	40.0 40.0	30.0 30.0	70.0 70.0	84.2 84.2	96.3 100.9	100 110
CAELHEAT039A00		575-3-60	7.5 10.0	5.59 7.46	7.8 10.3	70 70	40.0 40.0	30.0 30.0	70.0 70.0	70.3 70.3	80.0 83.2	90 90

LEGEND

FLA — Full Load Amps
Hp — Horsepower
MCA — Minimum Circuit Amps
MOCP — Maximum Overcurrent Protection (Amps)

*Values shown are for single-point connection of electric heat accessory and air handler.

NOTES:

1. Electrical resistance heaters are rated at 240 v, 480 v, or 575 v. To determine heater capacity (kW) at unit nameplate multiply the 240-v, 480-v, or 575-v capacity (kW) by the factor shown in the table below for the unit voltage.

HEATER RATING VOLTAGE	ACTUAL HEATER VOLTAGE										
	200	208	230	240	400	440	460	480	550	575	600
240	0.694	0.751	0.918	1	—	—	—	—	—	—	—
480	—	—	—	—	0.694	0.84	0.918	1	—	—	—
575	—	—	—	—	—	—	—	—	0.915	1	1.089

2. The following equation converts kW of heat energy to Btuh: kW x 3,412 = Btuh.
3. Heater contactor coils are 24 v and require 8 va holding current.
4. Electric heaters are tested and ETL approved at maximum total external static pressure of 1.9 in. wg.
5. MCA and MOCP values apply to both standard and alternate factory-supplied motors.
6. Approximate shipping weight for CAELHEAT001A00-015A00 is 55 lb each, CAELHEAT016A00-027A00 is 60 lb each, and CAELHEAT028A00-039A00 is 75 lb each.

APPLICATION DATA — 524A

1. **OPERATING LIMITS**

   Maximum fan speed — 524A-B,C072-240 . . . . . .1200 rpm

   Maximum fan speed — 524A-B,C300 . . . 1100 rpm (18.3 r/s)

2. **GENERAL —** Select equipment to match or to be slightly less than peak load. This provides better humidity control, less unit cycling, and less part-load operation. Equipment should be selected to perform at no less than 300 cfm/ton.

The air handler fan must always be operating when the condensing unit is operating.

Ductwork should be sized according to unit size, not building load. For larger units with two fans, a split duct transition is recommended at the fan outlets, but a plenum can be used with slight reduction in external static pressure capability.

FACTORY-INSTALLED NOZZLE AND DISTRIBUTOR DATA

UNIT	COIL TYPE	TXV Qty...Part No.*	DISTRIBUTOR Qty...Part No.†	FEEDER TUBES PER DISTRIBUTOR Qty...Size (in.)	NOZZLE Qty...Part No.
524A-B,C 072	3, 4 Row	1...TDEBX8	1...1116	12...1/4	1...E5
524A-B,C 090	3, 4 Row	1...TDEBX8	1...1126	15...1/4	1...C6
524A-B,C 120	3, 4 Row	2...TDEX6	2...1115	9...1/4	2...E4
524A-B 150	3 Row	2...TDEBX8	2...1115	9...1/4	2...E5
524A-C 150	4 Row	2...TDEBX8	2...1115	12...3/16	2...E5
524A-B 180	3 Row	2...TDEBX8	2...1116	12...1/4	2...E6
524A-C 180	4 Row	2...TDEBX8	2...1126	16...1/4	2...C6
524A-B 240	3 Row	2...TDEBX11	2...1116	13...1/4	2...E8
524A-C 240	4 Row	2...TDEBX11	2...1126	18...3/16	2...C8
524A-B 300	3 Row	2...TDEBX11	2...1126	15...1/4	2...C10
524A-C 300	4 Row	2...TDEBX11	2...1126	20...3/16	2...C15

*Danfoss part numbers shown.
†Sporlan Valve Co. part numbers shown.

NOTE: Hot gas bypass applications require field-supplied auxiliary side connector.

FAN MOTOR DATA

STANDARD MOTOR

UNIT SIZE 524A	072	090	120	150	180	240	300
208/230-1-60							
Speed (rpm)	1725	1725	—	—	—	—	—
Hp	1.3	2.4	—	—	—	—	—
Frame (NEMA)	56Y	56Y	—	—	—	—	—
Shaft Dia (in.)	5/8	5/8	—	—	—	—	—
208/230-3-60 and 460-3-60							
Speed (rpm)	1725	1725	1725	1725	1725	1745	1745
Hp	2.4	2.4	2.4	2.9	3.7	5.0	7.5
Frame (NEMA)	56Y	56Y	56Y	56Y	56Y	S184T	S213T
Shaft Dia (in.)	5/8	5/8	5/8	7/8	7/8	1 1/8	1 3/8
575-3-60							
Speed (rpm)	1725	1725	1725	1725	1725	1745	1755
Hp	1.0	2.0	2.0	3.0	3.0	5.0	7.5
Frame (NEMA)	56	56HZ	56HZ	56HZ	56HZ	184T	S213T
Shaft Dia (in.)	5/8	7/8	7/8	7/8	7/8	1 1/8	1 3/8

LEGEND

NEMA — National Electrical Manufacturers Association

APPLICATION DATA — 524A (cont)

FAN MOTOR DATA (cont)

ALTERNATE MOTOR

UNIT SIZE 524A	072	090	120	150	180	240	300
208/230-1-60							
Speed (rpm)	1725	1725	—	—	—	—	—
Hp	2.4	2.4	—	—	—	—	—
Frame (NEMA)	56Y	56Y	—	—	—	—	—
Shaft Dia (in.)	5/8	5/8	—	—	—	—	—
230-3-60 and 460-3-60							
Speed (rpm)	1725	1725	1725	1725	1725	1745	1745
Hp	2.9	2.9	3.7	3.7	5.0	7.5	10.0
Frame (NEMA)	56Y	56Y	Y56Y	Y56Y	S184T	S213T	S215T
Shaft Dia (in.)	7/8	7/8	7/8	7/8	1 1/8	1 3/8	1 3/8
575-3-60							
Speed (rpm)	1725	1725	1725	1745	1745	1755	1750
Hp	2.0	3.0	3.0	5.0	5.0	7.5	10.0
Frame (NEMA)	56HZ	56HZ	56HZ	184T	184T	S213T	D215T
Shaft Dia (in.)	7/8	7/8	7/8	1 1/8	1 1/8	1 3/8	1 3/8

LEGEND

NEMA — National Electrical Manufacturers Association

STANDARD DRIVE DATA

UNIT SIZE 524A	072	090	120	150	180	240	300
MOTOR DRIVE							
Motor Pulley Pitch Diameter (in.)	2.4-3.4	2.8-3.8	3.4-4.4	2.8-3.8	2.8-3.8	3.7-4.7	4.3-5.3
Pulley Factory Setting Full Turns Open	2.5	2.5	2.5	2.5	2.5	3.0	3.0
FAN DRIVE							
Pulley Pitch Dia (in.)	8.8	8.8	8.8	9.0	9.0	9.4	11.0
Pulley Bore (in.)	1	1	1	1 7/16	1 7/16	1 7/16	1 15/16
Belt No. — Section	1—A	1—A	1—A	1—A	1—A	1—B	2—B*
Belt Pitch (in.)	40.3	41.3	42.3	42.3	42.3	41.8	(2) 42.8 (2) 43.8
FAN SPEEDS (rpm)							
Factory Settings	568	647	764	632	632	771	752
Range	470-666	549-745	666-863	537-728	537-728	679-863	682-841
Max Allowable Speed (rpm)	1200	1200	1200	1200	1200	1200	1100
Change per 1/2 turn of Moveable Motor Pulley Flange	19.6	19.6	19.7	19.1	19.1	15.3	13.1
MAX FULL TURNS FROM CLOSED POSITION	5	5	5	5	5	6	6
SHAFTS CENTER DISTANCE (in.)	10.44-12.32	10.44-12.32	10.44-12.32	10.44-12.32	10.44-12.32	9.12-10.99	6.67-9.43

*Four belts shipped with unit. Use correct set of 2 belts sized according to the pulley setting.

APPLICATION DATA — 524A (cont)

MEDIUM-STATIC DRIVE DATA

UNIT SIZE 524A	072	090	120	150	180	240	300
MOTOR DRIVE							
Motor Pulley Pitch Diameter (in.)	3.4-4.4	3.4-4.4	3.4-4.4	3.4-4.4	3.7-4.7	4.3-5.3	4.3-5.3
Pulley Factory Setting Full Turns Open	2.5	2.5	2.5	2.5	3.0	3.0	3.0
FAN DRIVE							
Pulley Pitch Dia (in.)	8.8	8.0	8.0	8.2	8.6	9.4	9.4
Pulley Bore (in.)	1	1	1	$1^{7}/_{16}$	$1^{7}/_{16}$	$1^{7}/_{16}$	$1^{15}/_{16}$
Belt No. — Section	1—A	1—A	1—A	1—A	1—B	2—B	2—B*
Belt Pitch (in.)	42.3	40.3	40.3	41.3	41.8	41.8	(2) 38.8 (2) 39.8
FAN SPEEDS (rpm)							
Factory Setting	764	841	841	820	842	881	881
Range	666-863	733-949	733-949	715-926	742-943	798-984	798-984
Max Allowable Speed (rpm)	1200	1200	1200	1200	1200	1200	1100
Change per 1/2 Turn of Moveable Motor Pulley Flange	19.7	21.6	21.6	21.1	16.7	15.3	15.3
MAX FULL TURNS FROM CLOSED POSITION	5	5	5	5	6	6	6
SHAFTS CENTER DISTANCE (in.)	10.44-12.32	10.44-12.32	10.44-12.32	10.44-12.32	10.44-12.32	9.16-10.99	6.67-9.43

*Four belts shipped with unit. Use correct set of 2 belts sized according to the pulley setting.

HIGH-STATIC DRIVE DATA

UNIT SIZE 524A	072	090	120	150	180	240	300
MOTOR DRIVE							
Motor Pulley Pitch Diameter (in.)	3.4-4.4	3.4-4.4	3.4-4.4	3.7-4.7	4.3-5.3	4.3-5.3	4.3-5.3
Pulley Factory Setting Full Turns Open	2.5	2.5	2.5	3.0	3.0	3.0	3.0
FAN DRIVE							
Pulley Pitch Dia (in.)	7.0	6.0*	6.0	7.4	7.9	7.4	8.6
Pulley Bore (in.)	1	1	1	$1^{7}/_{16}$	$1^{7}/_{16}$	$1^{7}/_{16}$	$1^{15}/_{16}$
Belt No. — Section	1—A	1—A	1—A	1—B	1—B	2—B	2—B
Belt Pitch (in.)	41.3	37.3	37.3	39.8	39.8	36.8	37.8
FAN SPEEDS (rpm)							
Factory Setting	961	1121	1121	979	1060	1118	1024
Range	838-1084	978-1200*†	978-1200†	873-1096	950-1171	1014-1200†	873-1075
Max Allowable Speed (rpm)	1200	1200	1200	1200	1200	1200	1100
Change per 1/2 Turn of Moveable Motor Pulley Flange	24.6	28.7	28.7	19.4	18.4	19.4	16.7
MAX FULL TURNS FROM CLOSED POSITION	5	5	5	6	6	6	6
SHAFTS CENTER DISTANCE (in.)	10.44-12.32	10.44-12.32	10.44-12.32	10.44-12.32**	9.16-10.99	8.16-10.02	6.67-9.43

*Values for 3-phase motor shown. For single-phase motor, pulley pitch diameter is 7 in. and resulting fan speed is 837-1096 rpm.
†It is possible to adjust drive so that fan speed exceeds maximum allowable. DO NOT exceed 1200 rpm.
**575-v unit has a center distance of 9.16-10.99.

COMMERCIAL PACKAGED AIR-HANDLING UNIT

HVAC GUIDE SPECIFICATIONS

SIZE RANGE: 1,800 to 12,500 CFM, NOMINAL AIRFLOW 6 TO 25 TONS, NOMINAL COOLING

BRYANT MODEL NUMBERS: 524A-B (DIRECT-EXPANSION COIL), 524A-C (HIGH-CAPACITY 4-ROW DIRECT-EXPANSION COIL)

PART 1 — GENERAL

1.01 SYSTEM DESCRIPTION

A. Indoor, packaged air-handling unit for use in commercial split systems. Unit shall have a multiposition design and shall be capable of horizontal or vertical installation on a floor or in a ceiling, with or without ductwork. (Only vertical units are to be applied without ductwork.)

B. Unit with direct-expansion coil shall be used in a refrigerant circuit with a matching air-cooled condensing unit.

1.02 QUALITY ASSURANCE

A. Coils shall be designed and tested in accordance with ASHRAE 15 Safety Code for Mechanical Refrigeration, latest edition.

B. Unit shall be constructed in accordance with ETL and ETL, Canada, standards and shall carry the ETL and ETL, Canada, labels.

C. Unit insulation and adhesive shall comply with NFPA-90A requirements for flame spread and smoke generation. Insulation shall contain an EPA-registered immobilized antimicrobial agent to effectively resist the growth of bacteria and fungi as proven by tests in accordance with ASTM standards G21 and 22.

D. Unit shall be manufactured in a facility registered to the ISO 9001:2000 manufacturing quality standard.

E. Direct-expansion coils shall be burst and leak tested at 435 psi.

1.03 DELIVERY AND STORAGE

Units shall be stored and handled per manufacturer's recommendations.

PART 2 — PRODUCTS

2.01 EQUIPMENT

Indoor mounted, draw-thru, packaged air-handling unit that can be used in a suspended horizontal configuration or a vertical configuration. Unit shall consist of forward-curved belt-driven centrifugal fan(s), motor and drive assembly, prewired fan motor contactor, factory-installed refrigerant metering devices (direct-expansion coil units), cooling coil, 2-in. disposable air filters, and condensate drain pans for vertical or horizontal configurations.

A. Base Unit:

1. Cabinet shall be constructed of mill-galvanized steel.
2. Cabinet panels shall be fully insulated with 1/2-in. fire-retardant material. Insulation shall contain an EPA-registered immobilized antimicrobial agent to effectively resist the growth of bacteria and fungi as proven by tests in accordance with ASTM standards G21 and 22.
3. Unit shall contain non-corroding condensate drain pans for both vertical and horizontal applications. Drain pans shall have connections on right and left sides of unit to facilitate field connection. Drain pans shall have the ability to be sloped toward the right or left side of the unit to prevent standing water from accumulating in pans.
4. Unit shall have factory-supplied 2-in. throwaway-type filters installed upstream from the cooling coil. Filter access shall be from either the right or left side of the unit.

B. Coils:

Coils shall consist of 3 rows (524A-B) or 4 rows (524A-C) of copper tubes with sine-wave aluminum fins bonded to the tubes by mechanical expansion. Suction and liquid line connections or supply and discharge connections shall be made on the same side of the coil.

1. Direct-expansion coils shall feature factory-installed thermostatic expansion valves (TXVs) for refrigerant control. The TXVs shall be capable of external adjustment. Coil tubing shall be internally rifled to maximize heat transfer.
2. High-Capacity Coil:

   The high-capacity 4-row coil consists of 4 rows of 3/8-in. copper tubes with sine-wave aluminum fins bonded to the tubes by mechanical expansion. Coil tubing shall be internally rifled to maximize heat transfer. Suction and liquid line connections shall be made on the same side of the coil. Direct-expansion coils shall feature factory-installed thermostatic expansion valves (TXVs) for refrigerant control. The TXVs shall be capable of external adjustment.

C. Operating Characteristics:

Unit shall be capable of providing _____ cfm airflow at an external static pressure of _____ in. wg.

D. Motor:

Fan motor of the size and electrical characteristics specified on the equipment schedule shall be factory supplied and installed.

Motors rated at 1.3 through 3.7 hp shall have internal thermal overload protection. Motors rated at 5, 7 1/2, and 10 hp shall be protected by a circuit breaker.

E. Special Features:

1. Alternate Motor and Drive:

   An alternate motor and/or medium-static or high-static drive shall be available to meet the airflow and external static pressure requirements specified on the equipment schedule.
2. External Paint:

   Where conditions require, units shall be painted with an American Sterling Gray finish.
3. Hot Water Coil:

   Coil shall be 2-row, U-bend coil with copper tubes and aluminum plate fins bonded to the tubes by mechanical expansion. Coil shall be mounted in a galvanized steel housing that shall be fastened to the unit's fan deck for blow-thru heating operation. Coil shall have maximum working pressure of 150 psig.
4. Steam Distributing Coil:

   Coil shall consist of one row of copper tubes with aluminum plate fins, and shall have inner steam distributing tubes. Coil shall be mounted in a galvanized steel housing and shall be fastened to the unit's fan deck for blow-thru heating operation. Coil shall have maximum working pressure of 20 psig at 260 F.

5. Electric Heaters:

   Heaters for nominal 240, 480, or 575-volt, 3-phase, 60 Hz power supply shall be factory-supplied for field installation as shown on the equipment drawings. Electric heat assembly shall be ETL and ETL, Canada, agency approved, and shall have single-point power wiring. Heater assembly shall include contactors with 24-v coils, power wiring, 24-v control wiring terminal blocks, and a hinged access panel. Electric heaters shall not be used with air discharge plenum.

6. Air Discharge Plenum:

   Plenum shall be factory supplied to provide free-blow air distribution for vertical floor-mounted units. A grille with moveable vanes for horizontal or vertical airflow adjustment shall be included. Plenum shall be field-assembled and field-installed on the unit's fan deck for blow-thru air distribution. Plenum shall not be used with electric heaters.

7. Return-Air Grille:

   Grille shall be factory supplied for field installation on the unit's return air opening.

8. Unit Subbase:

   Subbase assembly shall be factory supplied for field installation. Subbase shall elevate floor-mounted vertical units to provide access for correct condensate drain connection.

9. Economizer:

   Economizer for ventilation or "free" cooling shall be factory provided for field installation on either return air opening of air handler. For free cooling applications, economizer shall be compatible with separate thermostat; economizer dampers shall open when outdoor air enthalpy is suitable for free cooling. Economizer shall include enthalpy control and damper actuator. Economizer shall be compatible with accessory CO_2 sensor. Economizer damper shall open when indoor CO_2 level rises above predetermined set point.

   A 2 to 10 vdc actuator adapter must be field-supplied and installed on economizer for demand control ventilation using the CO_2 sensor accessory.

10. Thermostat Controls:

    a. Commercial Electronic Thermostat with 7-day timeclock, auto-changeover, multi-stage capability, and large LCD temperature display.

    b. Commercial Electronic Non-programmable Thermostat with auto-changeover, multi-stage capacity, and large LCD display.

11. Overhead Suspension Package:

    Package shall include necessary brackets to support units in a horizontal ceiling installation.

12. Condensate Drain Trap:

    Trap shall have transparent, serviceable design for easy cleaning. Kit shall include overflow shutoff switch and wiring harness for connection to an alarm if desired.

13. UV-C Germicidal Lamps:

    UV-C emitters and fixtures shall be specifically designed for use inside an HVAC system. An ASME nozzled test apparatus using a 45 F airstream moving at not less than 400 fpm shall measure individual lamp output. Lamp output at 253.7 nm shall not be less than 10μW/cm^2 per inch of arc length measured at a distance of one meter.

    a. UV-C power supplies shall be high efficiency, electric type which are matched to the emitters and are capable of producing the specified output intensity with an input power no more than 80 watts.

    b. Emitters and fixtures shall be installed in sufficient quantity and arranged so as to provide an equal distribution of UV-C energy on the coil and drain fan.

    c. The minimum UV-C energy striking the leading edge of the coil fins shall be not less than 820 μW/cm^2 at the closest point and through placement, not less than 60% of that value at the farthest point. Equal amounts are to strike the drain pan, either directly or indirectly through reflection.

    d. Emitters and fixtures shall be installed at right angles to the conforming lines of the coil fins, such that through incident angle reflection, UV-C energy strikes all target surfaces of the coil, drain pan, and the available line of sight airstream.

14. CO_2 Sensor:

    The field-installed CO_2 ventilation sensor measures the amount of ventilation needed by the space and a proportional integral derivative loop (PID) calculation makes adjustments to the economizer minimum position during occupied operation. The indoor CO_2 will be compared to an outdoor CO_2 reference before making adjustments to the economizer minimum position.

INDEX

SPECIFICATIONS SUBJECT TO CHANGE WITHOUT NOTICE

UNIT MUST BE INSTALLED IN ACCORDANCE WITH INSTALLATION INSTRUCTIONS

Printed in U.S.A. 7/04 Catalog No. 5256-904