American Standard
Style That Works Better

ACRYLUX™ 48" x 34" SHOWER BASE
HIGH GLOSS

ACRYLUX 48" x 34" SHOWER BASE

❑ 4834Y1.ST SHOWER BASE

Product Features:
- High-gloss acrylic-capped ABS with fiberglass reinforcement
- Single threshold
- Integral three-sided, tiling/water retention flange
- Textured bottom

Nominal Dimensions:
47-7/8" x 33-1/4" x 5-1/8"
(1216 x 845 x 130mm)

For use with:
- 4834Y1.SW Shower Wall Set
- Base can also be installed without Acrylux wall set

Compliance Certifications -
Meets or Exceeds the Following Specifications:
- ANSI Z124.2 for Plastic Showers
- ASTM E162 for Flammability
- NFPA 258 for Smoke Density

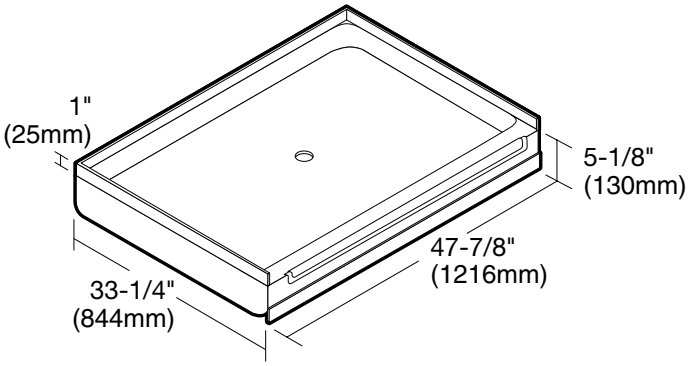

STUD LAYOUT

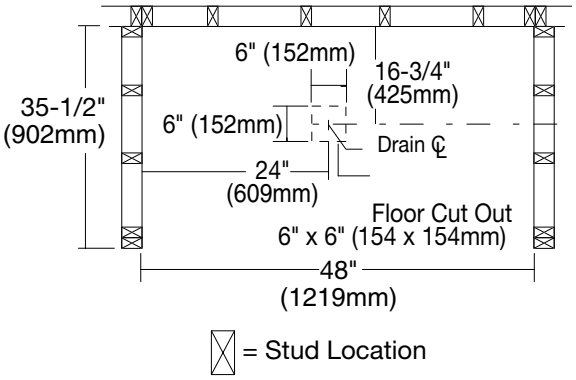

© 2008 AS America Inc.