OWNER'S MANUAL
INSTALLATION INSTRUCTIONS

WINEGARD®

RV DIGITAL SATELLITE SYSTEM

with Digital Elevation Sensor

Models RM-46DE/00DE, RM-04DE, RM-FL4D

U.S. PATENT NO. 5,532,710
Made in U.S.A.

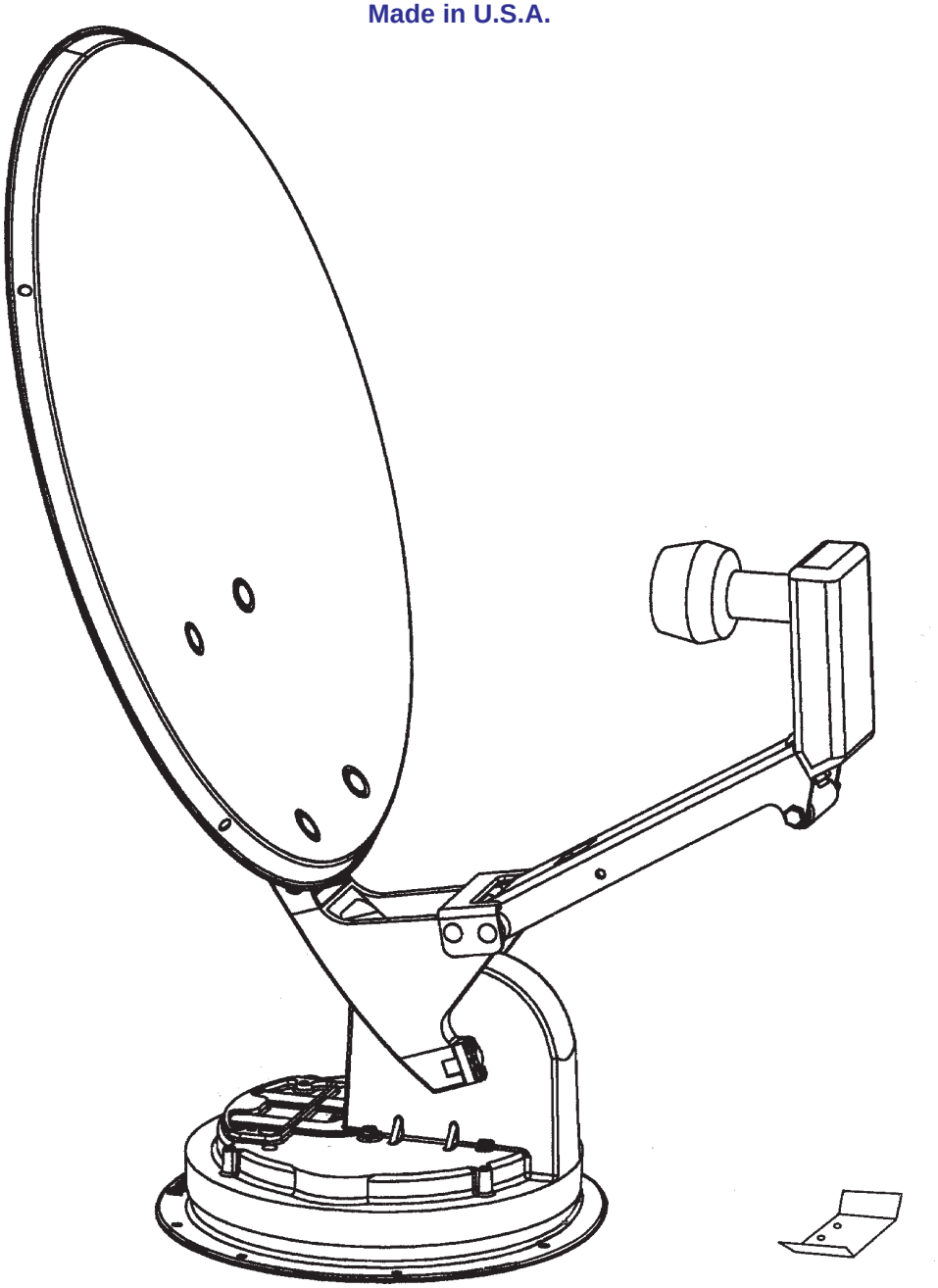

Winegard Company • 3000 Kirkwood St. • Burlington, IA 52601-2000
319/754-0600 • FAX 319/754-0787 • www.winegard.com
Printed in U.S.A. © Winegard Company 2000 2451970 Rev. 2/08/01

INSTALLATION & ASSEMBLY

STEP 1. Choose a location on the roof for dish that will allow dish to raise and rotate without interfering with other roof-mounted equipment. Make sure inside ceiling plate is easily accessible, and with no obstructions that would interfere with operation.

Figure 1 shows minimum distance (10") antenna should be located from edge of vehicle roof. It is recommended that you check with your dealer or manufacturer for provisions that may have been made in the roof for antenna mounting; a reinforced roof area, or pre-wire installation from the factory.

NOTE: ***The system must be level for proper operation.*** **Winegard Model RW-5000 roof wedge with gasket is available. If inside roof wedge is needed, Winegard's RW-1000 can be trimmed to fit ceiling plate.**

STEP 2. Position template on roof (pg. 8 this manual). **CAUTION: DO NOT drill through wiring. C<u>arefully</u>** drill a 1-3/4"hole through roof and ceiling of vehicle. **Inspect hole to make sure wiring is intact. (Roof template, pgs. 8-9.)**

STEP 3. Assemble dish to backup using bolts and nuts provided, Figure 2.

STEP 4. Mount dish on roof in upright position. Rotate clockwise to stop, Figure 3. Dish will be toward back of vehicle when in stowed or travel position. The word FRONT is embossed on the base. This should face front of vehicle. Secure to roof using screws (provided). The travel bracket should be mounted to roof 6-1/8" from base of dish, toward back of vehicle. See Figure 3B.

NOTE: Apply non-hardening sealing compound to screw heads, coax access hole and edge of gasket under mount base.

Install the vent tube on the back of the mount base (This is the side opposite the word FRONT). The hole for the vent tube is shown in Figure 3A. **CAUTION: DO NOT seal hole in vent tube.** Put sealant around the outside of the vent tube, approximately 1/2" from end. Push the vent tube into the hole. The sealant will seal the hole as you push in. Leave approximately 2 to 2-1/2" of the vent tube extending from the hole. Put a small amount of sealant on the roof under the vent tube end to hold in place.

FIGURE 3A

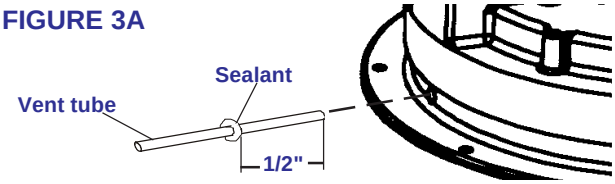

CAUTION: DO NOT GET sealing compound between Base Plate and Rotating Gear Housing. DO NOT PAINT top of Base Plate or around Rotating Gear Housing.

STEP 5. Facing the front of the dish, note the coax attached to side of the feed arm. Measure 24" of coax from this point. **Do not cut**. Put coax around mount base, Figure 3. Fasten cable clamp in hole in mount base (check roof template, page 8, for correct location) at the end of the coax cable measure, Figure 3.

STEP 6. Apply approved sealing compound over mounting screw heads.

STEP 7. Feed coax through the roof using cover plate (included with hardware), Figure 3C. **Weatherproof cable entry** by applying sealant under lip of roof-thru plate and where cable enters roof. Attach plate to roof with screws provided. Apply sealant over screws and around edge of roof-thru plate, making sure cable entry is sealed. Secure cables as necessary to prevent whipping. **If download connection must be made on top of roof, make sure to weatherproof connection!**

FIGURE 2

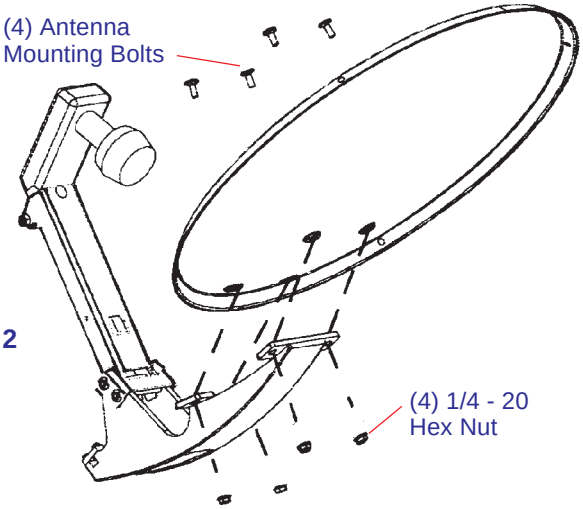

FIGURE 3

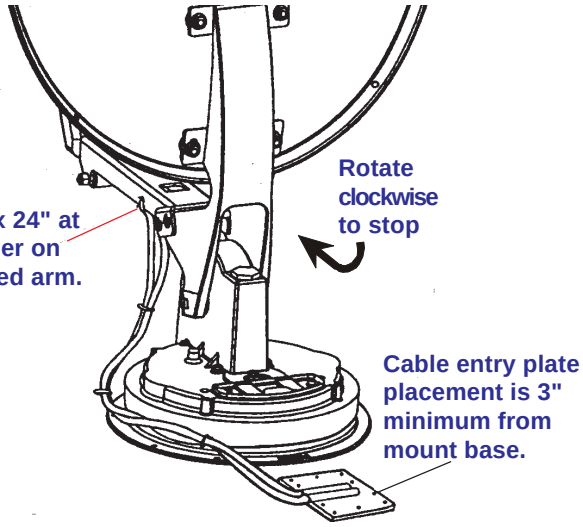

FIGURE 3B

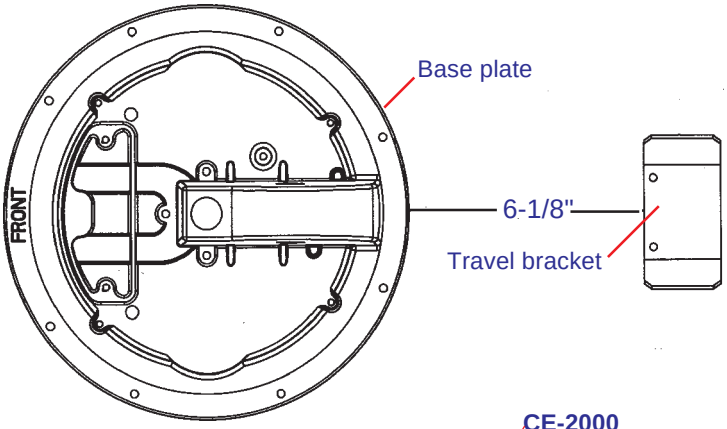

FIGURE 3C

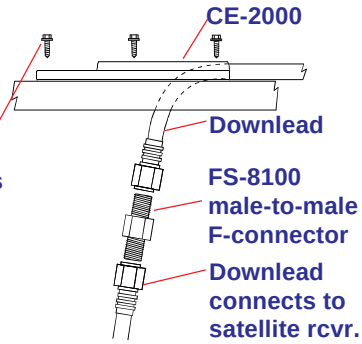

DIGITAL ELEVATION SENSOR ROOF CONNECTIONS

The illustrations below show the different methods of connecting wires at roof level. Method will depend on model. Wire colors **MUST MATCH,** ie. red to red.

This wire harness connects to the digital elevation sensor on the antenna.

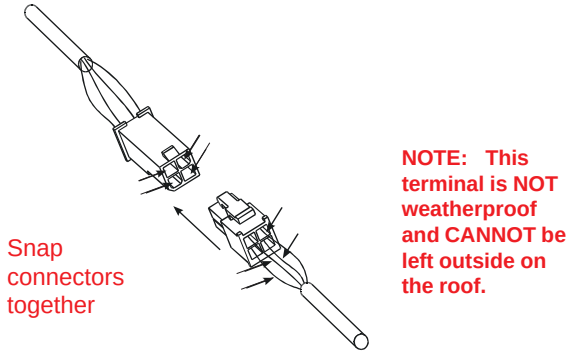

INSIDE RV

FIGURE 3D

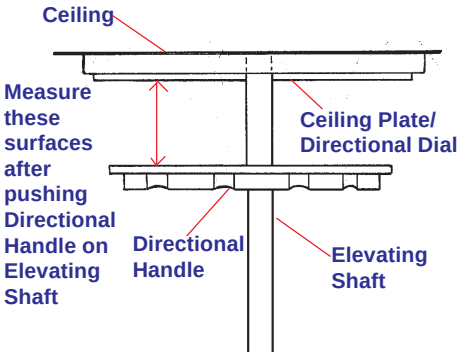

FIGURE 3E

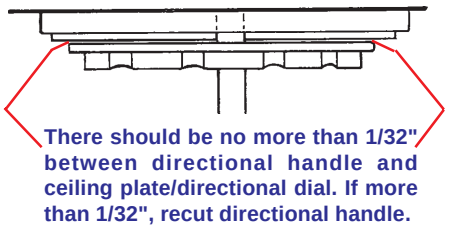

FIGURE 3F

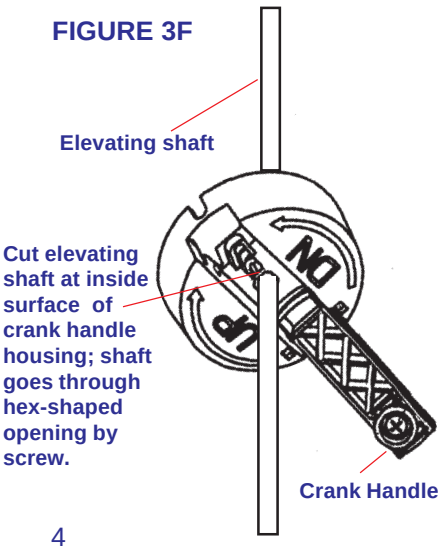

STEP 8. Check Figure 4 on page 5 for reference to numbers. The circled numbers show assembly from the ceiling down. Install ceiling plate (#1) to headliner, using screws (#2).

Be sure rotate/lock lever is pointing toward back of vehicle and hole in ceiling aligns with hole in the ceiling plate.

NOTE: Make sure large and small keyways line up in the hub and directional handle!

STEP 9. The directional handle will fit roofs up to 5-1/4" thick. If you are using wedges to compensate for roof/ceiling slope, be sure to allow for this extra thickness. You may add an extension to the directional handle for thicker roofs. Each extension will increase the length of the directional handle by 2-1/4".

To install, push directional handle (#4) over elevating shaft and push until you feel slight resistance. Measure the distance between the directional handle to the bottom surface of the ceiling plate, Figure 3D. Next, remove handle and measure that same distance from end of directional handle. Reduce 3/16" of this measure for proper fit. See Figures 3D and 3E

STEP 10. IF YOU ARE USING AN EXTENSION, adjust the total length of the directional handle and extension by **cutting the directional handle.** After adjusting parts for proper roof thickness, glue the extension to the directional handle. Use ABS (plastic pipe) glue.

NOTE: For roofs thicker that 6-9/16", a longer aluminum hex shaft will be needed. Contact Winegard Company for this part.

STEP 11. Flip down handle on the elevating crank handle (#5). Slide elevating crank handle up shaft until snug against directional handle. Mark the elevating shaft at inside bottom surface of crank handle housing, Figure 3F. Cut shaft at mark, after removing crank handle. Reinstall crank. **After screw touches shaft, tighten only 1/4 turn more. Screw simply holds elevating crank on.**

NOTE: There should be no more than 1/32" between directional handle and ceiling plate/directional dial, Figure 3D. If more than 1/32", recut directional handle.

STEP 12. Check system for proper operation. Elevate dish with crank handle. A minimum of 14 turns is needed to elevate dish. Then, move directional handle with dish elevated. Directional handle should turn freely. If possible, have someone watch to make sure coax does not bind or interfere with dish movement.

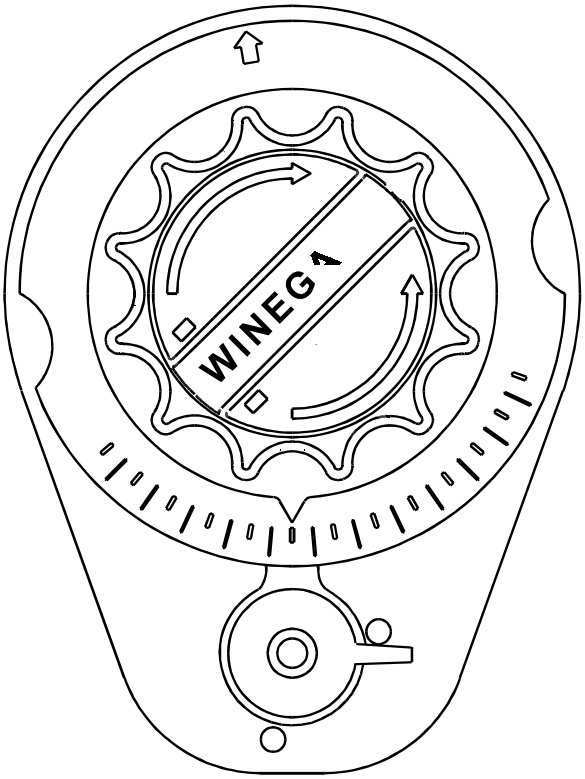
WINEG

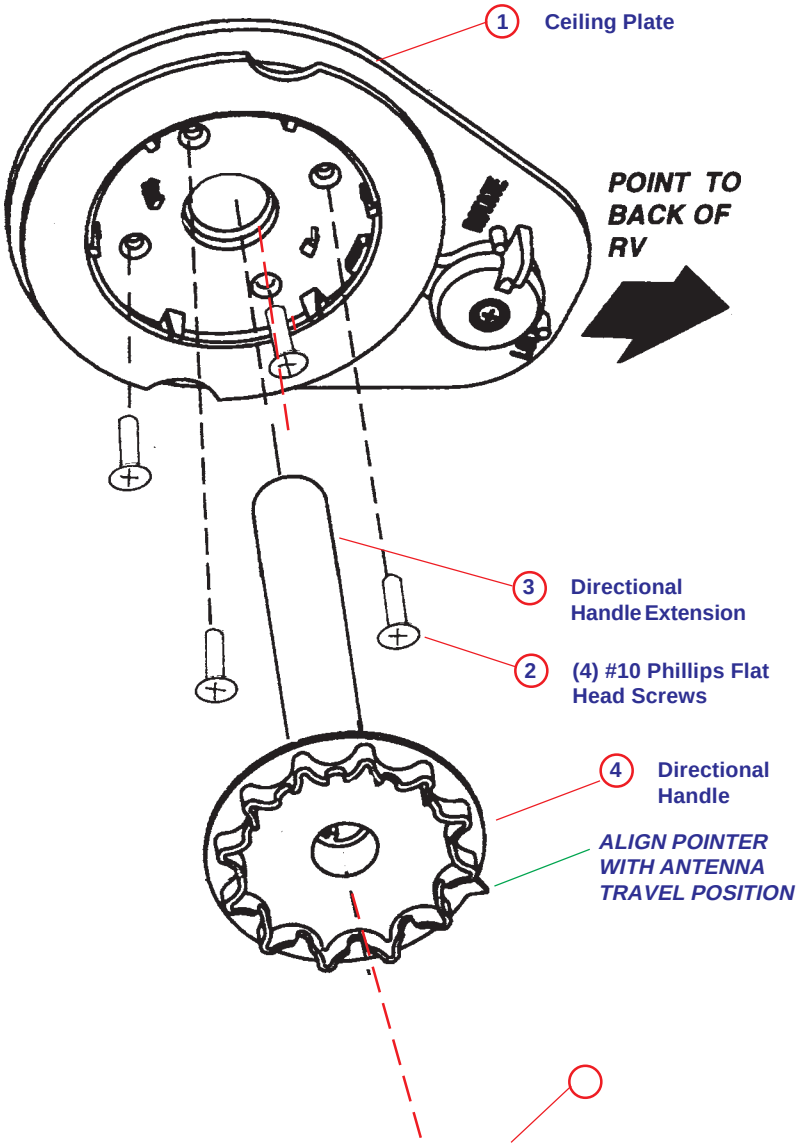
1 Ceiling Plate
POINT TO BACK OF RV
3 Directional Handle Extension
2 (4) #10 Phillips Flat Head Screws
4 Directional Handle
ALIGN POINTER WITH ANTENNA TRAVEL POSITION

DIGITAL ELEVATION SENSOR INTERIOR WALLPLATE CONNECTIONS

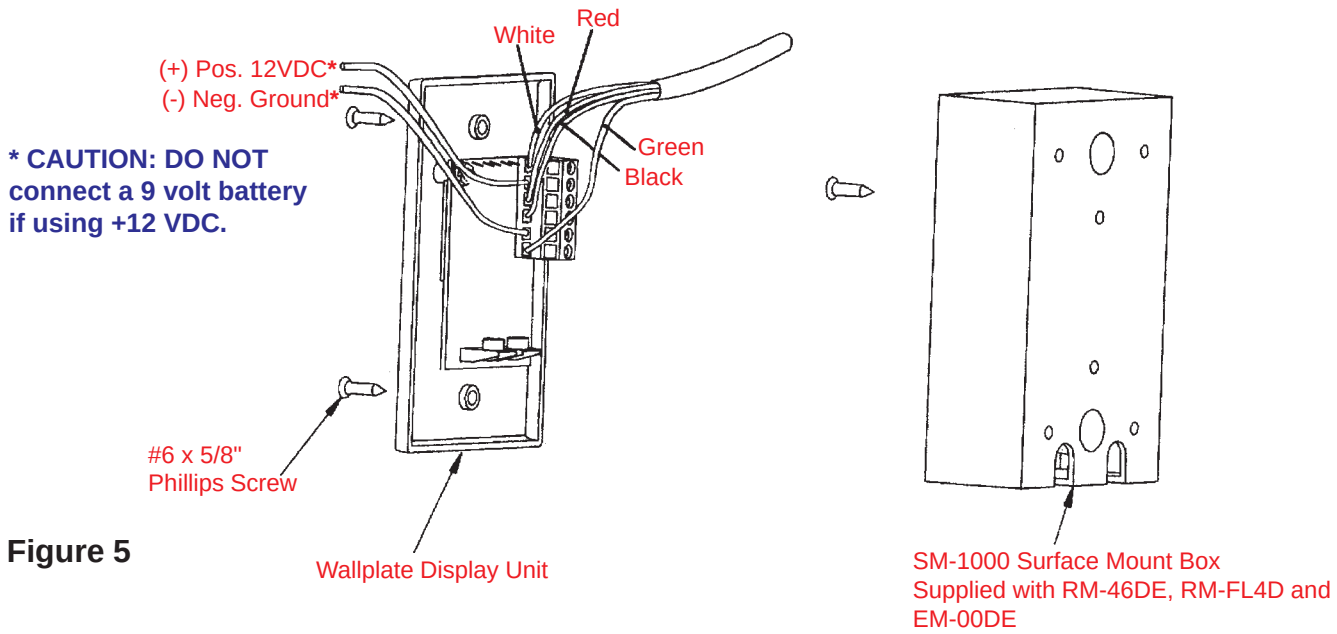

Figure 5

Step 13. See Figure 5. If using the SM-1000 surface mount box, feed cable through hole in box. Connect wires coming from sensor on roof to wall plate display in coach. Strip wires 1/4". It is **IMPORTANT** to connect the wires properly at roof and at wall plate. System is designed to use **clean** +12 VDC from RV **OR** a 9 volt battery (*not both*). **(DO NOT USE power from lighting circuit.)** Connect the White, Red, Green, Black wires before connecting the +12 volt wires. Make sure all wires are in proper place before applying power. When inserting and tightening the wires into terminals on back of display board, be sure you have clamped on the bare wire conductor and not the insulation.

Pressing the button should display 24 (+ or - 1 degree) when antenna is in vertical position. **The Display will automatically turn off after approximately one minute.**

Step 14. See Figure 6. If using 9 volt battery, a cable tie should be installed to secure battery. The tie should not be too tight to prevent battery replacement.

STEP 15. Carefully check connectors and cable entry points. Be sure these areas have been properly sealed to prevent water damage to your system and property!

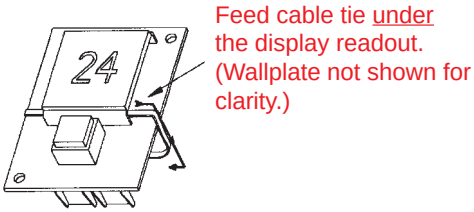

Figure 6

*** CAUTION: DO NOT connect to +12 VDC if using a 9 volt battery.**

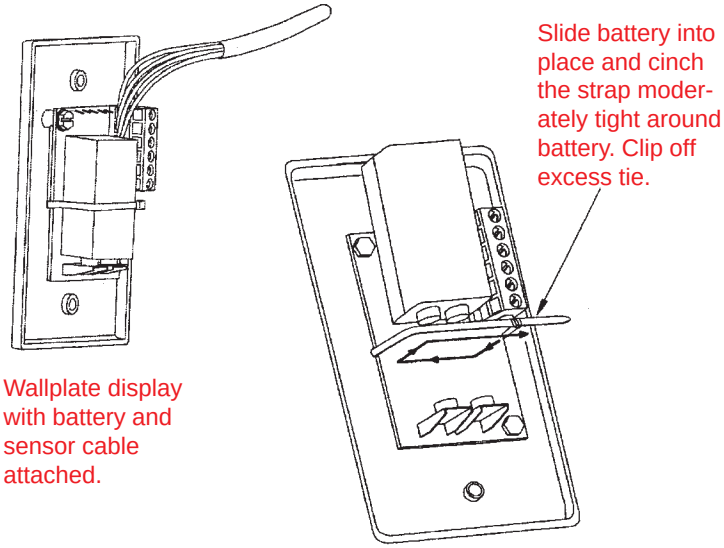

OPERATION

STEP 1. Step outside your vehicle and, using a compass, determine which direction is North. (Standing in or near vehicle can give you an incorrect reading.) The more accurately you determine North, the easier it will be to find the satellite(s).

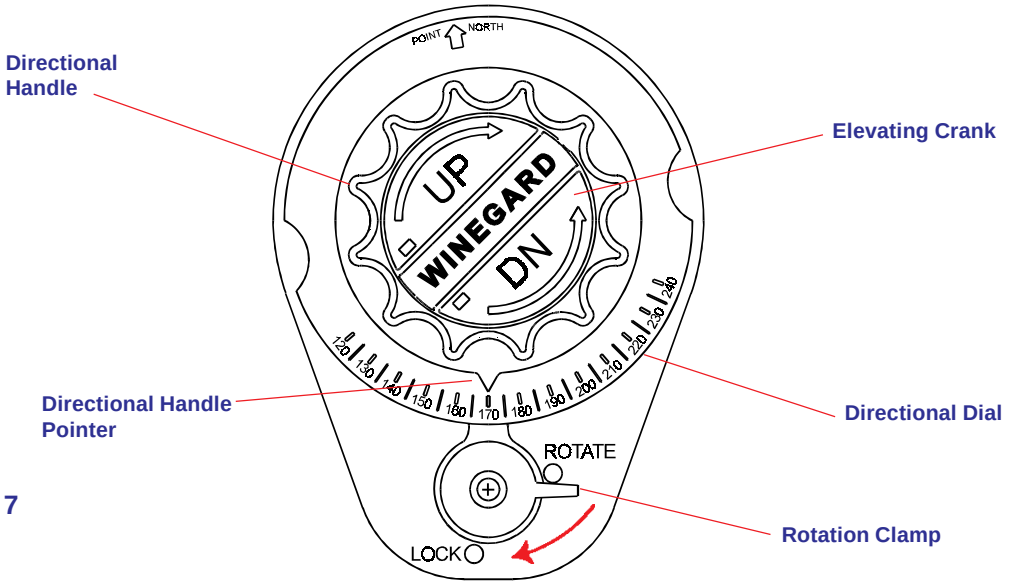

FIGURE 7

Step 2. Using satellite receiver, determine correct elevation for your location. See your receiver manual for details on how to obtain setup information.

Step 3. Press button on Winegard Digital Display Wall plate. If antenna is in travel position the display will show LL for Low Limit; HH, for High Limit, will appear when dish is in up position.

Step 4. Crank elevation handle to raise antenna. Stop cranking when readout displays correct elevation for your location.

Step 5. Rotate antenna ***VERY SLOWLY*** until correct satellite signal is acquired. NOTE: Rotate 2° and then stop. DO NOT rotate continuously, even if you are rotating slowly. If you notice the elevation angle has changed, it could be due to the following reasons:

1. RV is not parked level.
2. Antenna system is mounted to a slightly sloped RV roof. (This is not a problem. **When you have rotated the antenna so it is facing in approximatly the right azimuth [compass direction], simply adjust to correct elevation and continue searching for signal.**)

Special Notes: When you have detected the satellite signal, adjust the antenna up/down and left/right for strongest signal your receiver displays. Due to variations in receivers and installation methods, you may find the elevation numbers, after peaking on the strongest signal, no longer match what the receiver recommended. This is normal. The elevation sensor should always get you close enough to pick up a signal to peak on. If display turns off while you're searching, just push button for another minute of operation. After a little practice, most people find the signal in 30 to 50 seconds.

Replacement Parts

To order repair parts, contact Winegard Company. **Customer service hours are 7:30 a.m. to 5:00 p.m., Mon. - Thu., 7:30 a.m. to 4:00 p.m., Fri., Central Time. Call toll-free 1-800-288-8094.** Credit card only, minimum $5.00 order. For parts, refer to pages in the back of this instruction sheet.

Trouble Shooting

- If digital display reads EE, check wiring and connection. If these are done incorrectly, it will affect operation.
- Rotate antenna ***VERY SLOWLY*** until correct satellite signal is acquired.

Roof Template

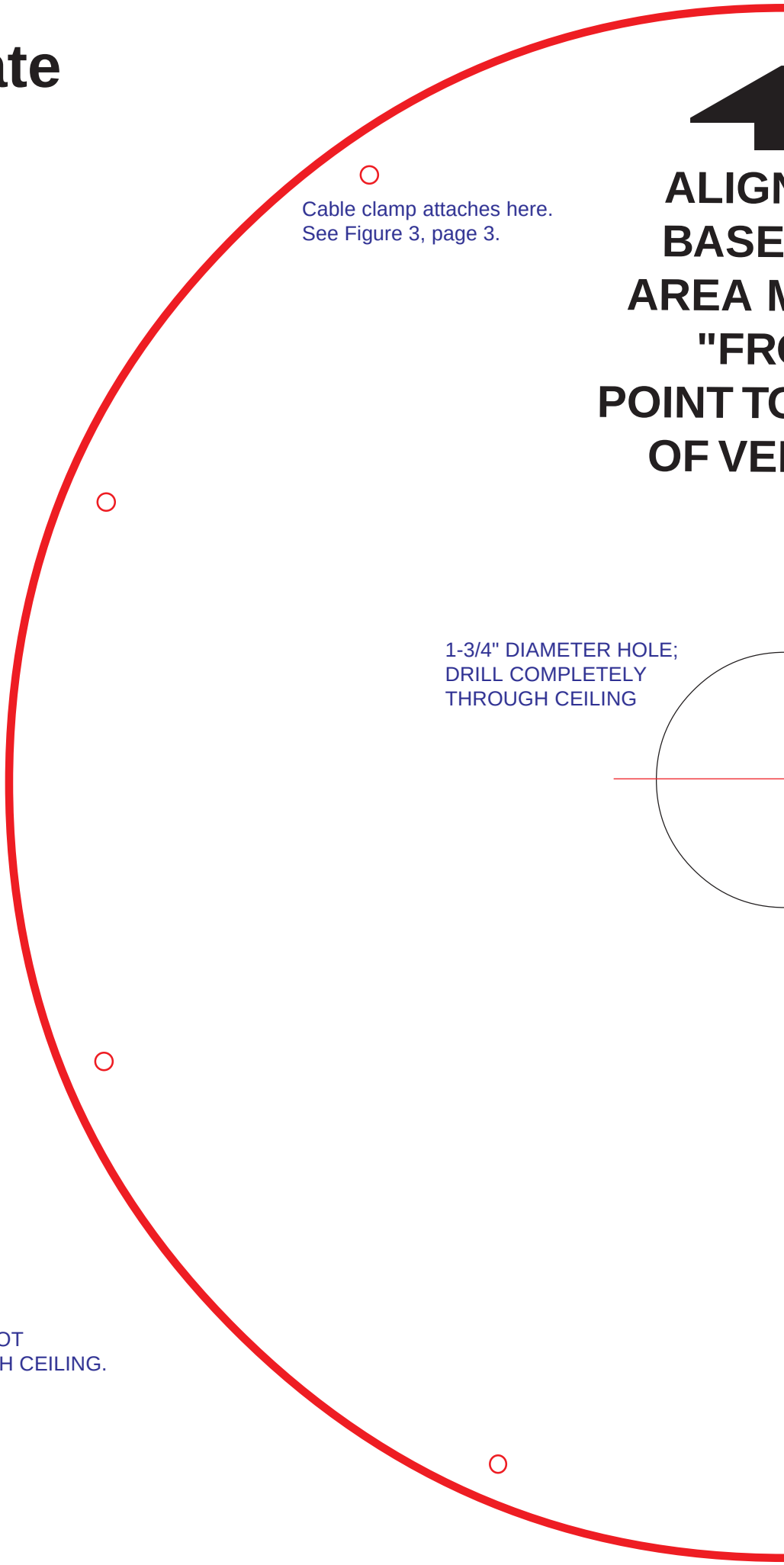

N WITH
PLATE
MARKED
ONT"
D FRONT
HICLE

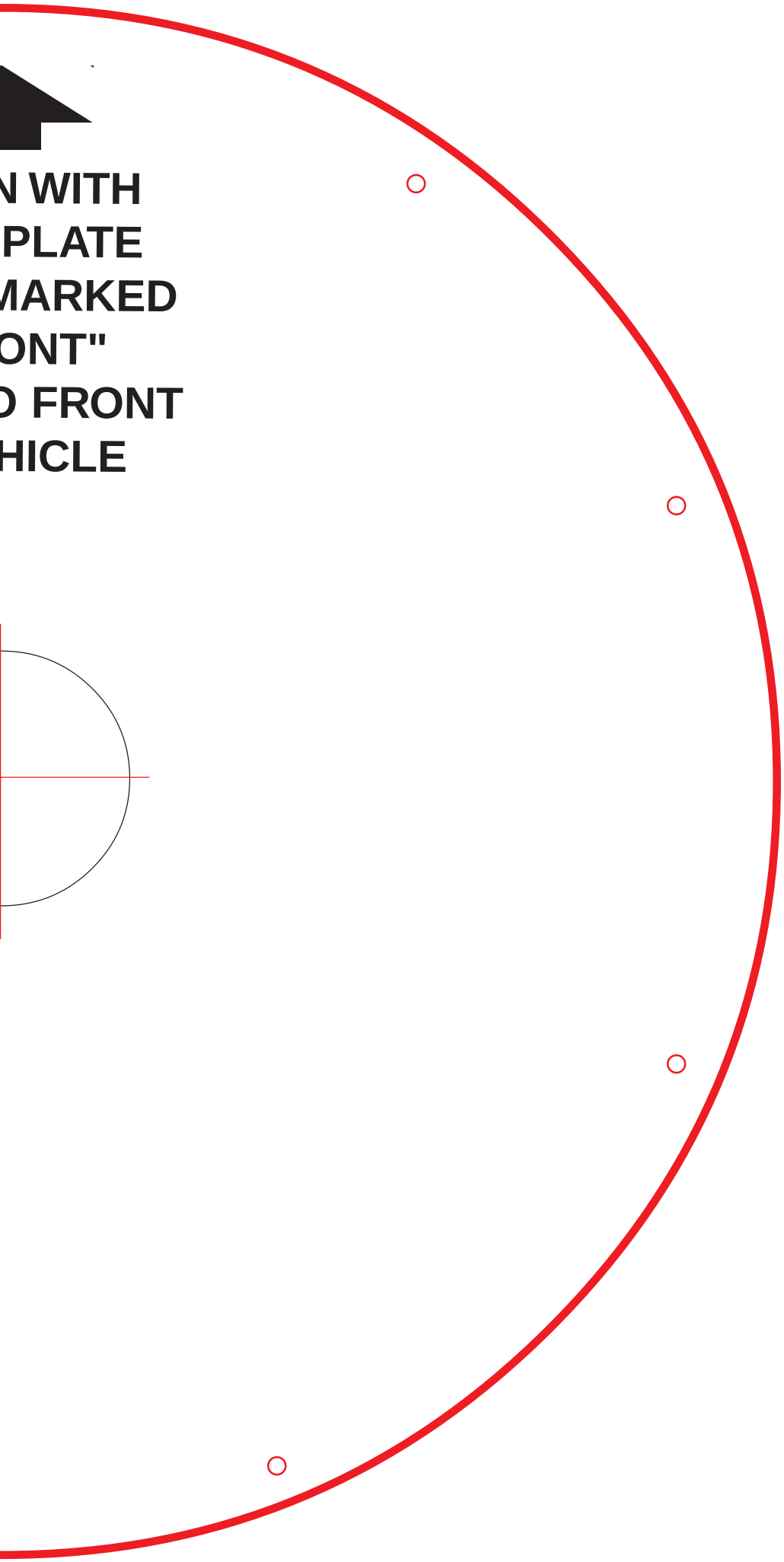

TUNING ANTENNA

STEP 1. Your receiver should indicate it is receiving a signal. To tune your antenna for the best signal strength, **slowly** move the antenna left, then right until you have found the position that gives the highest signal strength. **It is important to turn the antenna slowly; since the signal is digital the receiver takes a few seconds to lock on.**

STEP 2. Place rotation clamp in the **LOCK** position. This prevents the antenna from moving and losing the signal.

STEP 3. **Slowly** raise, then lower the antenna until you have peaked the signal. **You are now ready to watch satellite TV!**

LOWERING ANTENNA TO TRAVEL POSITION

STEP 1. Set rotation clamp to the **ROTATE** position.

STEP 2. Rotate antenna until pointer on directional handle aligns with the rotation clamp.

STEP 3. Turn elevating crank (counter clockwise) **in direction of "DOWN" arrow until resistance is met**. The number of turns will vary according to the elevation angle the antenna was set to.

STEP 4. Move rotation clamp to the LOCK position. Antenna is now locked in travel position.

STEP 5. Snap elevation crank into place.

CAUTION: NEVER LOWER ANTENNA IN ANY POSITION EXCEPT TRAVEL POSITION.

DO'S

1. *Do* check parking location for obstructions before raising antenna.
2. *Do* carefully raise, lower and rotate — if difficult, check for cause.
3. *Do* rotate slowly when searching for the satellite(s) and check fine tuning on TV set to make sure it is properly adjusted.
4. ***Do* lower antenna before moving vehicle.**
5. Activate programming by calling programming service for your receiver.

DON'T'S

1. ***Don't move RV/coach with the antenna in the UP position. This will VOID your warranty. This may also cause damage to your roof.***
2. *Don't* force elevating crank up or down. Check for cause of trouble.
3. *Don't* rotate directional handle hard against stops.
4. *Don't* apply paint over top of base plate or anywhere on lift.
5. *Don't* apply sealing compound on gear housing.

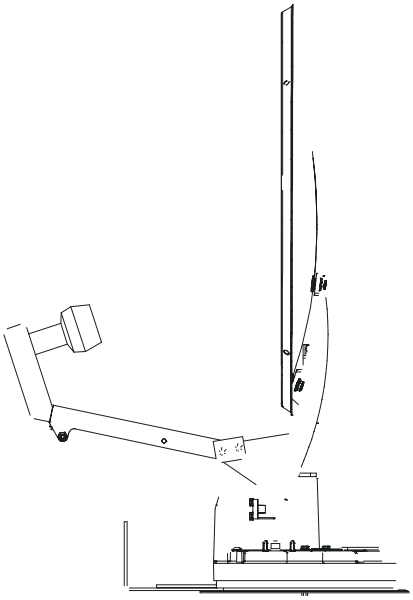

(2) 1/4-20
Hex Nut
P.N. 2160228

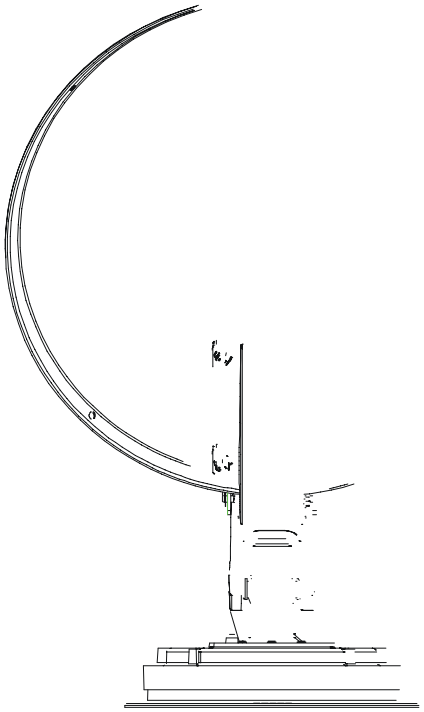

PARTS LIST

Location of elevation sensor on RM-46DE, installed and calibrated at the factory

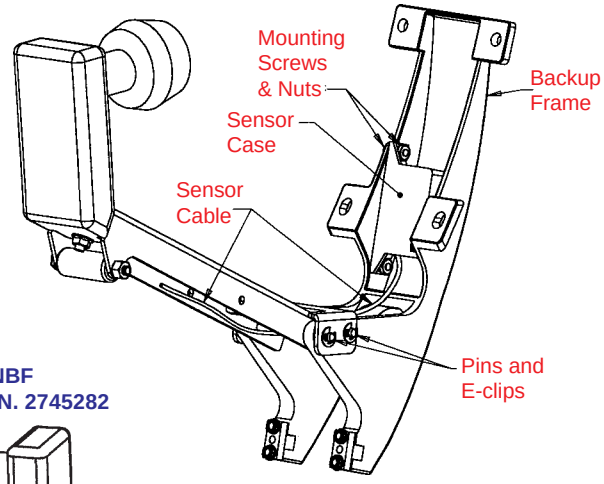

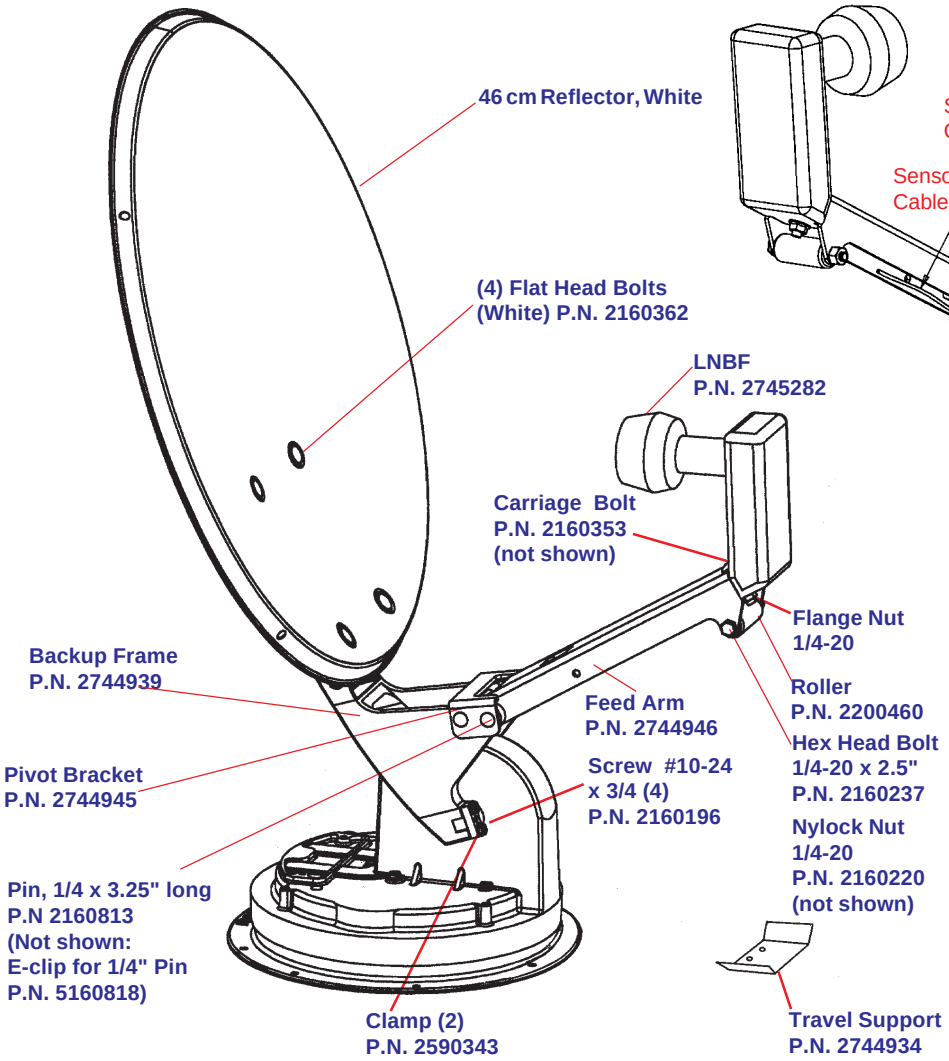

Sensor parts w/cable, installed at factory

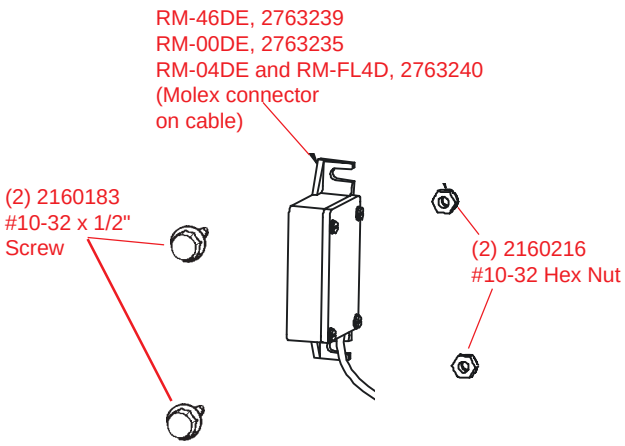

Interior wallplate display and parts

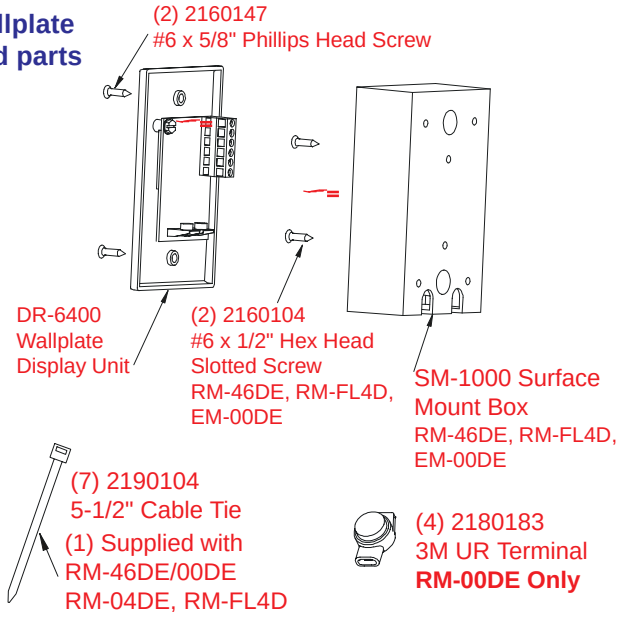

PARTS LIST

INTERIOR HARDWARE KIT
RP-41RM

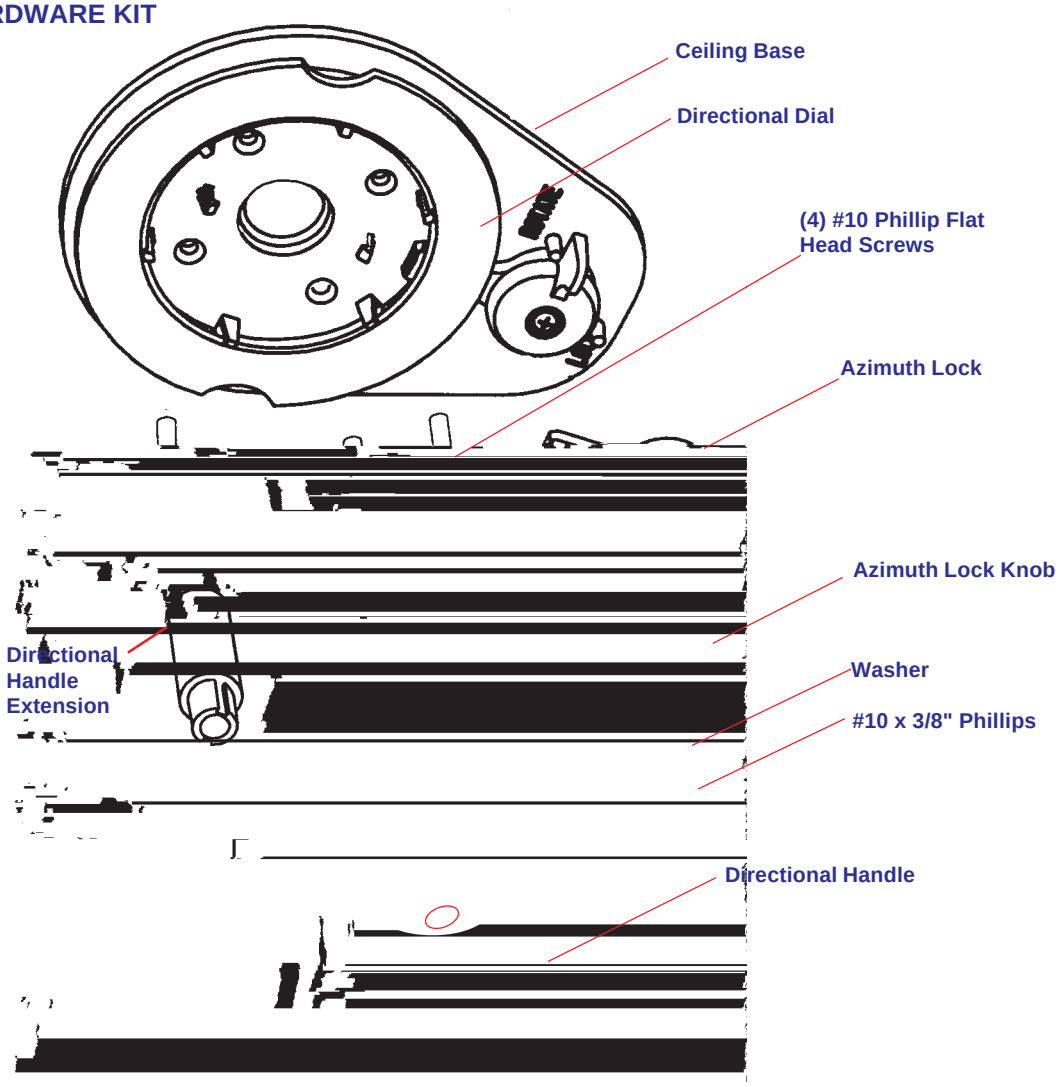

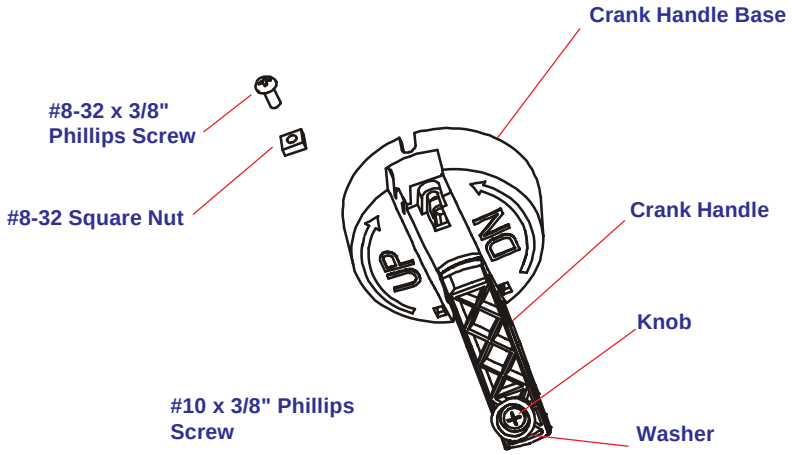

SPECIFICATIONS

ANTENNA & MOUNT

Height when raised	30" verticle max.
Height in the travel position	8" max.
Operating radius	17" (34" diameter circle)
Roof space required	26"
LNB	Compatible with DIRECTV® and DISH Network™
Weight	12 lbs.
Color	White
Antenna height	20.9"
Antenna width	19.2"
F/D	0.59
Offset angle	24°
Frequency range	10.95 - 12.75 GHz
Gain:	
11.2 GHz	33.22 dBi
12.1 GHz	33.89 dBi
12.6 GHz	34.23 dBi
Aperture efficiency	73%
Cross polarization (on axis)	-21 dB
*Beamwidth at -3 dB	3.5°
*Beamwidth at -10 dB	7.0°
Wind loading	Up to hurricane force
Ship weight:	20.6 lbs.

DIRECTV® is a registered trademark of DIRECTV, Inc., a unit of Hughes Electronics Corporation.
DISH Network™ is a trademark of EchoStar Communications Corporation.

ANTENNA/LIFT/LNBF TWO YEAR LIMITED WARRANTY

Printed in U.S.A. Winegard Company • 3000 Kirkwood Street • Burlington, Iowa 52601-2000 © Winegard Company, 2000 2451970 Rev. 2/08/01