Simplicity®

# PARTS MANUAL

# MODEL 4108

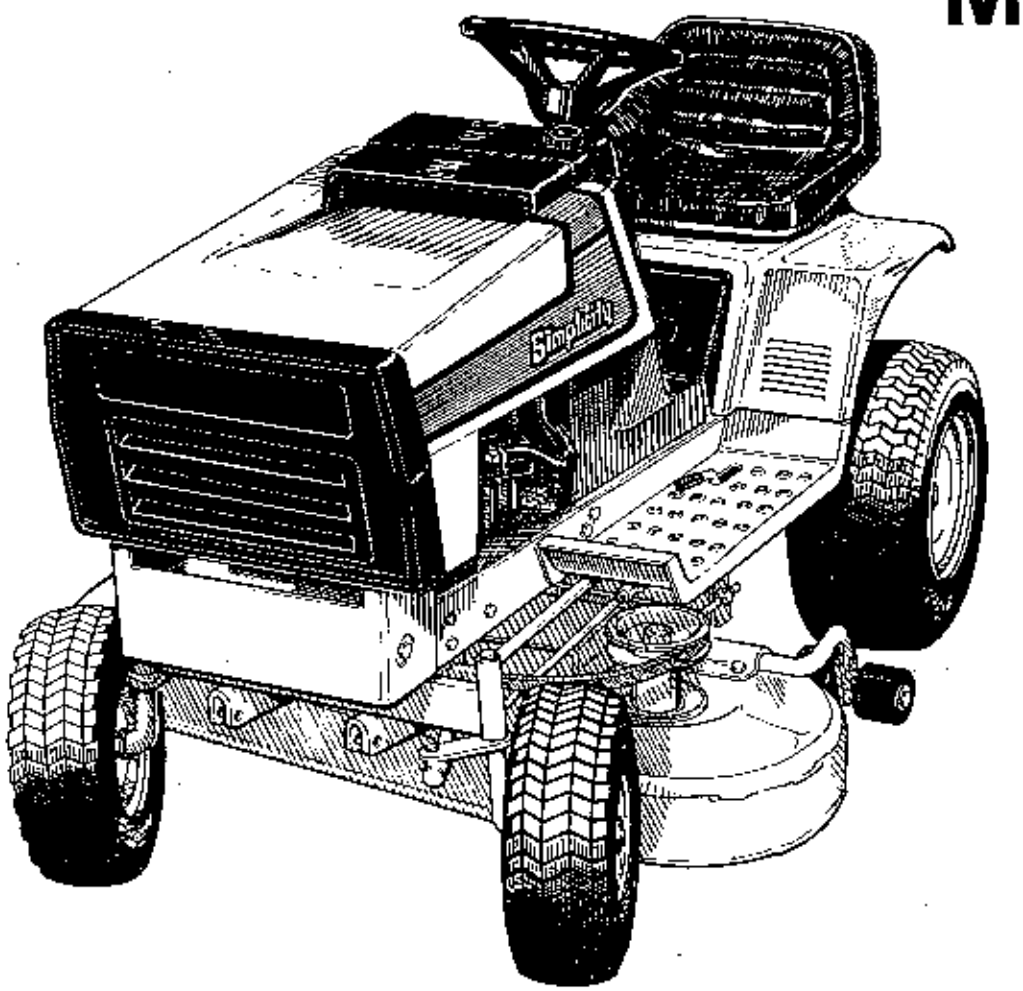


8 HP TRACTOR
MANUAL START
**MFG. NO. 1690259**
8 HP TRACTOR
ELECTRIC START
**MFG. NO. 1690261**
36" MOWER
**MFG. NO. 1690269**

TP - 388
PRINTED IN U.S.A.
835

Attention Dealers:

This manual is one of the new style parts manuals which Simplicity is issuing. We trust you will find that this manual contains more information than previously offered in parts manuals, including important facts which will help you with repair work and parts ordering.

The new loose-leaf format allows for easier updating of specific sections should it be necessary and, in general, makes the manual easier to work with in day to day use.

For quick, accurate reference when making warranty claims, group numbers are now given with each parts section. Also note that serial numbers of units are now listed to locate any difference in parts which may occur in later models. Be aware of these unit serial numbers when ordering parts.

Standard torques appear in a chart at the end of the manual, while important individual torques are given on specific parts drawings. These provide easy reference notes for repair and troubleshooting.

CRITICAL and MAJOR notations point out important facts or instructions which relate to safety or reliability and machine quality. The CRITICAL notation [C] pinpoints characteristics which, if not properly followed, can create a safety hazard. The MAJOR notation [M] marks characteristics which, if not properly followed, may result in operating failure, shortened product life, or greatly reduced quality of the unit.

We are confident that you will find that these new format parts manuals contain more complete information for your benefit, and that they are much easier to use.

Simplicity
Technical Publications

© *Simplicity Manufacturing Co.,* *1976*

# Model 4108

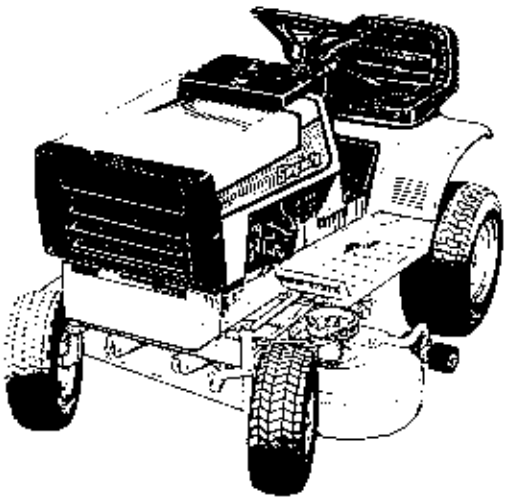

# Table of Contents


MAIN FRAME & FRONT AXLE (4108 Man. & Elec. Start) ..... 2
FRONT TIRES & STEERING (4108 Man. & Elec.Start) ..... 4
ENGINE & DRIVE (4108 Man. & Elec. Start) ..... 6
BRAKE & CLUTCH (4108 Man. & Elec. Start) ..... 8
ELECTRICAL (4108 Man. Start) ..... 10
ELECTRICAL (4108 Elec. Start) ..... 12
HOOD, GRILLE & DASH (4108 Man. & Elec. Start) ..... 14
SEAT (4108 Man. & Elec. Start) ..... 16
36" MOWER DECK & ARBORS (4108 Man. & Elec. Start) ..... 18
36" CLUTCH & WHEEL SUPPORT (4108 Man. & Elec. Start) ..... 20
36" ROLLER & MISC. (4108 Man. & Elec. Start) ..... 22
TRANSAXLE (4108 Man. & Elec. Start) ..... 24
STANDARD HARDWARE TORQUE SPECIFICATIONS ..... Inside Back Cover

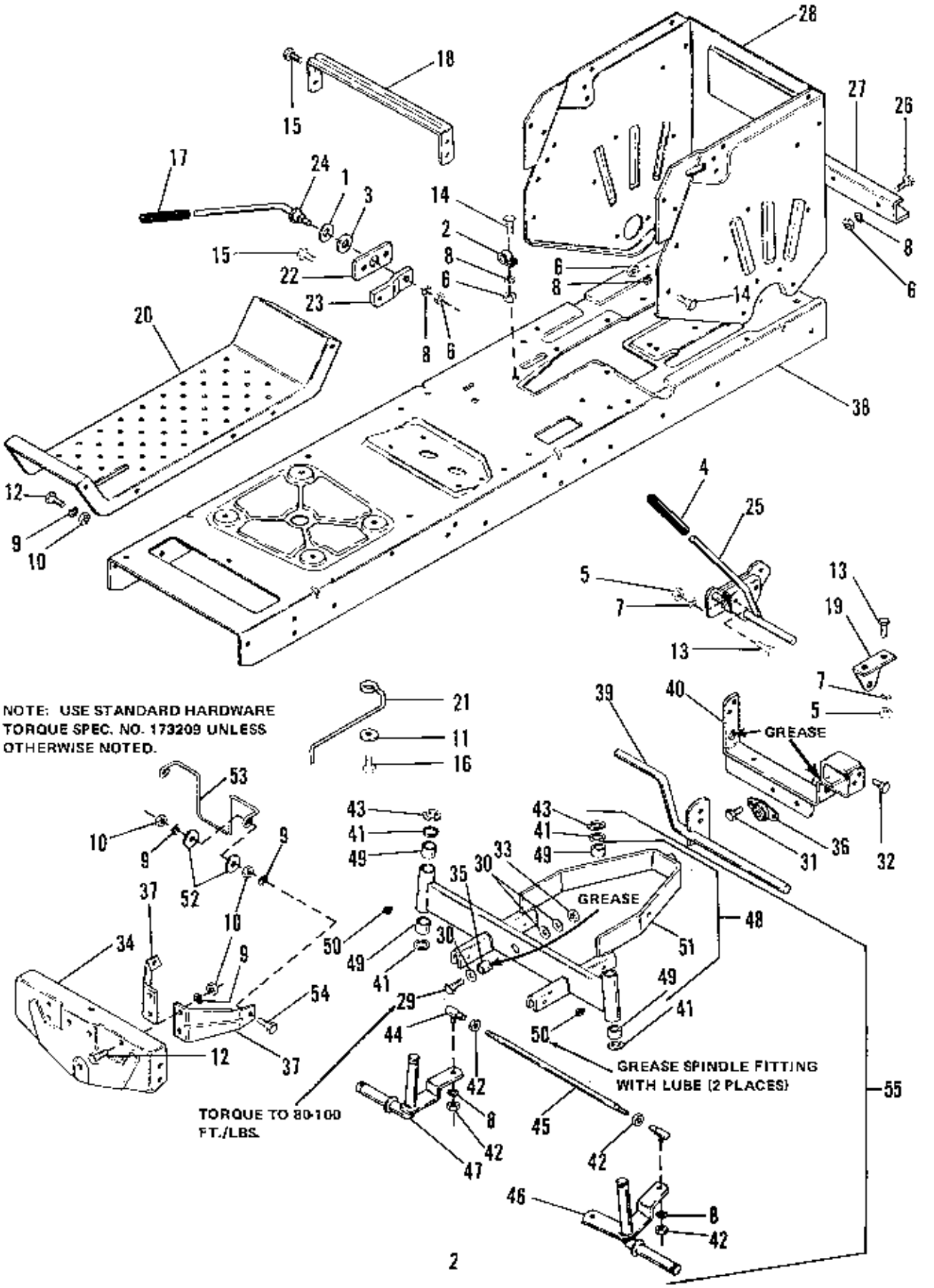
NOTE: USE STANDARD HARDWARE TORQUE SPEC. NO. 173209 UNLESS OTHERWISE NOTED.
GREASE
GREASE
GREASE SPINDLE FITTING WITH LUBE (2 PLACES)
TORQUE TO 80-100 FT./LBS.

| Ref. No. | Part No. | Qty. | Serial No. | Description |
|---|---|---|---|---|
| 1 | 101025 | 1 | (00000)-( ) | WASHER |
| 2 | 122186 | 1 | (00000)-( ) | CLAMP |
| 3 | 156116 | 1 | (00000)-( ) | WASHER |
| 4 | 176934 | 1 | (00000)-( ) | HANDLE, Grip |
| 5 | 916622 | 4 | (00000)-( ) | NUT, Hex, 1/4-20 |
| 6 | 916950 | 10 | (00000)-( ) | NUT, Hex, 3/8-16 |
| 7 | 916964 | 4 | (00000)-( ) | LOCKWASHER, Spring, 1/4 |
| 8 | 916965 | 12 | (00000)-( ) | LOCKWASHER, Spring, 3/8 |
| 9 | 917356 | 21 | (00000)-( ) | LOCKWASHER, Spring, 5/16 |
| 10 | 917372 | 21 | (00000)-( ) | NUT, Hex, 5/16-18 |
| 11 | 917642 | 1 | (00000)-( ) | WASHER, Plain, 5/16 |
| 12 | 921332 | 17 | (00000)-( ) | CAPSCREW, Hex Hd., 5/16-18 x 3/4 |
| 13 | 921959 | 4 | (00000)-( ) | CAPSCREW, Hex Hd., 1/4-20 x 5/8 |
| 14 | 921965 | 6 | (00000)-( ) | CAPSCREW, Hex Hd., 3/8-16 x 3/4 |
| 15 | 924856 | 6 | (00000)-( ) | SCREW, Tapping, 5/16-18 x 1/2 |
| 16 | 925009 | 1 | (00000)-( ) | SCREW, Tapping, 5/16-18 x 7/8 |
| 17 | 1651820 | 1 | (00000)-( ) | GRIP |
| 18 | 1654707 | 1 | (00000)-( ) | BRACE, Seat |
| 19 | 1654783 | 4 | (00000)-( ) | SUPPORT, Clutch |
| 20 | 1656225 | 2 | (00000)-( ) | FOOTREST |
| 21 | 1656658 | 1 | (00000)-( ) | STOP, Belt |
| 22 | 1656754 | 1 | (00000)-( ) | BAR, Support |
| 23 | 1656755 | 1 | (00000)-( ) | ARM, Lift |
| 24 | 1656815 | 1 | (00000)-( ) | HANDLE, Lift |
| 25 | 1656994 | 1 | (00000)-( ) | LEVER ASSY, Clutch |
| 26 | 921210 | 3 | (00000)-( ) | CAPSCREW, Hex Hd., 3/8-16 x 1 |
| 27 | 1655591 | 1 | (00000)-( ) | BAR, Draw |
| 28 | 1656092 | 1 | (00000)-( ) | REAR FRAME AXLE SUPPORT |
| 29 | 923154 | 1 | (00000)-( ) | CAPSCREW, Hex Hd., 1/2-13 x 1-1/2, Gr. 8 |
| 30 | 926192 | 3 | (00000)-( ) | WASHER, Plain, 9/16 x 1-1/8 x 1/8 |
| 31 | 928730 | 2 | (00000)-( ) | SCREW, Taptite, Washer Hd., 3/8-16 x 1/2 |
| 32 | 930601 | 4 | (00000)-( ) | SCREW, Taptite, Washer Hd., 5/16-18 x 5/8 |
| 33 | 930648 | 1 | (00000)-( ) | NUT, Lock, 1/2-13, Gr. 8 |
| 34 | 1652600 | 1 | (00000)-( ) | FRONT AXLE SUPPORT |
| 35 | 1655034 | 1 | (00000)-( ) | SPACER |
| 36 | 1655064 | 1 | (00000)-( ) | BEARING ASSY, Side Flange |
| 37 | 1655076 | 2 | (00000)-( ) | BRACE, Front Axle |
| 38 | 1655808 | 1 | (00000)-( ) | FRAME |
| 39 | 1656912 | 1 | (00000)-( ) | LEVER ASSY, Brake |
| 40 | 1657079 | 1 | (00000)-( ) | SUPPORT ASSY, Axle |
| 41 | 108181 | 4 | (00000)-( ) | WASHER |
| 42 | 918403 | 4 | (00000)-( ) | NUT, Hex, Jam, 3/8-24 |
| 43 | 927794 | 2 | (00000)-( ) | RING, Retaining, Size No. 75, 3/4 |
| 44 | 1610295 | 2 | (00000)-( ) | BALL JOINT ASSY |
| 45 | 1652613 | 1 | (00000)-( ) | TIE ROD |
| 46 | 1652663 | 1 | (00000)-( ) | SPINDLE ASSY, L.H. |
| 47 | 1652664 | 1 | (00000)-( ) | SPINDLE ASSY, R.H. |
| 48 | 1655268 | 1 | (00000)-( ) | AXLE ASSY, Front |
| 49 | 154289 | 4 | (00000)-( ) | BUSHING |
| 50 | 914687 | 2 | (00000)-( ) | FITTING, Lube, 1/4-28 |
| 51 | | 1 | (00000)-( ) | AXLE ASSY, Front |
| 52 | 917377 | 4 | (00000)-( ) | WASHER, Plain, 1/4 |
| 53 | 1656396 | 1 | (00000)-( ) | STOP, Belt |
| 54 | 920243 | 2 | (00000)-( ) | CAPSCREW, Hex Hd., 5/16-18 x 1-1/2 |
| 55 | 1658031 | 1 | (00000)-( ) | FRONT AXLE & TIE ROD SUB-ASSY |

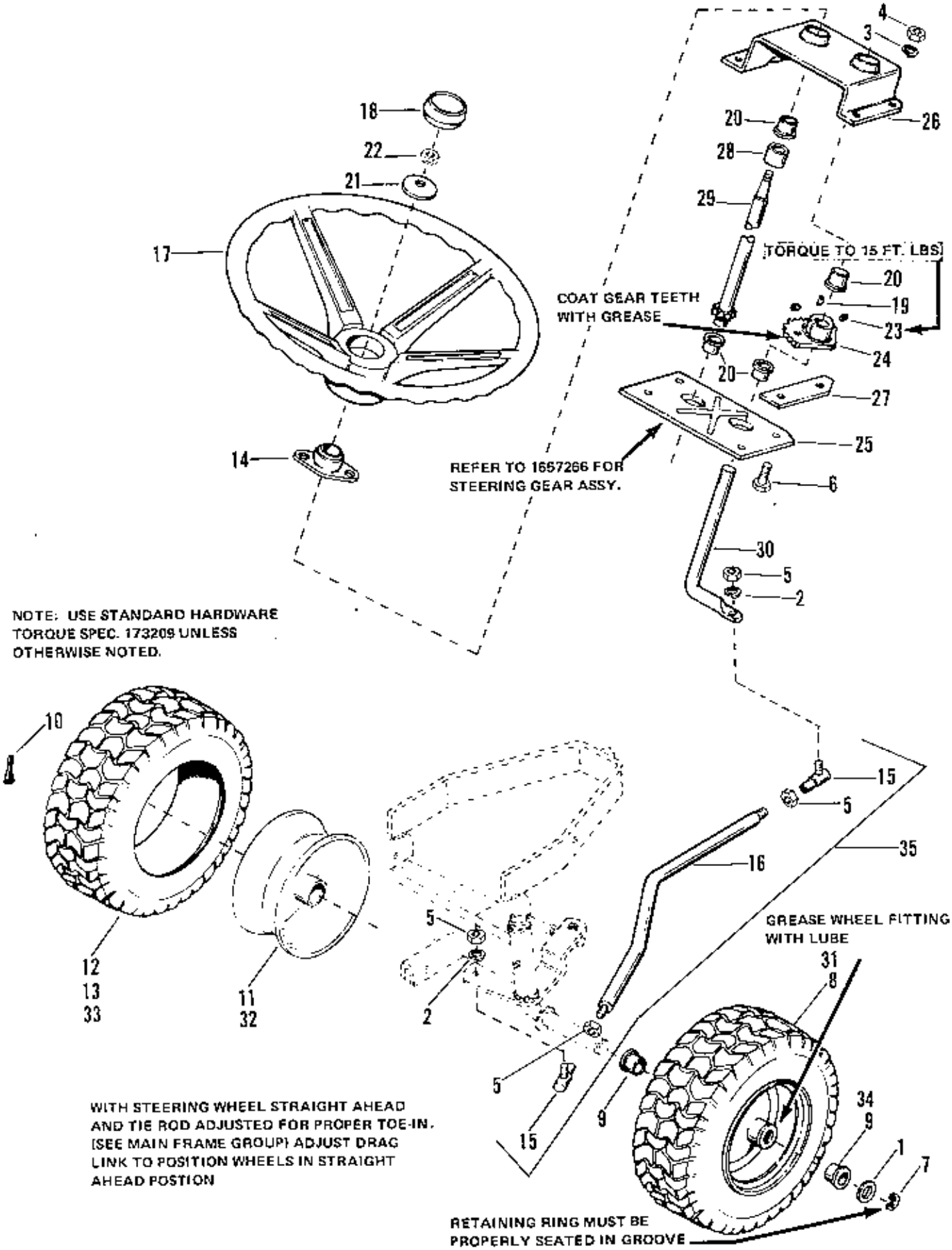
4
3
26
18
20
22
28
21
29
17
TORQUE TO 15 FT. LBS.
20
19
COAT GEAR TEETH WITH GREASE
23
24
20
27
25
14
REFER TO 1657266 FOR STEERING GEAR ASSY.
6
30
5
2
NOTE: USE STANDARD HARDWARE TORQUE SPEC. 173209 UNLESS OTHERWISE NOTED.
10
15
5
35
16
GREASE WHEEL FITTING WITH LUBE
5
31
8
12
13
33
11
32
2
5
9
34
9
15
1
7
WITH STEERING WHEEL STRAIGHT AHEAD AND TIE ROD ADJUSTED FOR PROPER TOE-IN. (SEE MAIN FRAME GROUP) ADJUST DRAG LINK TO POSITION WHEELS IN STRAIGHT AHEAD POSTION
RETAINING RING MUST BE PROPERLY SEATED IN GROOVE

## *Front Tires & Steering Group (Man. & Elec. Start, 4108)*

**Simplicity**

*5/78*

| Ref. No. | Part No. | Qty. | Serial No. | Description |
|---|---|---|---|---|
| 1 | 154071 | 2 | (00000)-( ) | WASHER |
| 2 | 916965 | 2 | (00000)-( ) | LOCKWASHER, Spring, 3/8 |
| 3 | 917356 | 4 | (00000)-( ) | LOCKWASHER, Spring, 5/16 |
| 4 | 917372 | 4 | (00000)-( ) | NUT, Hex, 5/16-18 |
| 5 | 916602 | 4 | (00000)-( ) | NUT, Hex Full, 3/8-24 |
| 6 | 921333 | 4 | (00000)-( ) | CAPSCREW, Hex Hd., 5/16-18 x 1 |
| 7 | 927794 | 2 | (00000)-( ) | RING, Retaining |
| 8 | 1653617 | 2 | (00000)-( ) | WHEEL & TIRE ASSY, 15 x 6.00-6 (6000 Only) |
| 9 | 163111 | 4 | (00000)-( ) | BEARING, Relief (6000 Only) |
| 10 | 171270 | 2 | (00000)-( ) | VALVE, Stem & Cap |
| 11 | 1653615 | 2 | (00000)-( ) | WHEEL & BUSHING ASSY, 15-6 (6000 Only) |
| 12 | 1653618 | 2 | (00000)-( ) | TIRE, 15 x 6.00-6, Carlisle (6000 Only) |
| 13 | 1656885 | 2 | (00000)-( ) | GOODYEAR TIRE, 15 x 6.00-6 (6000 Only) |
| 14 | 1653670 | 1 | (00000)-( ) | BEARING |
| 15 | 1610295 | 2 | (00000)-( ) | BALL JOINT ASSY |
| 16 | 1656750 | 1 | (00000)-( ) | DRAG LINK ASSY |
| 17 | 1657016 | 1 | (00000)-( ) | WHEEL, Steering |
| 18 | 1657017 | 1 | (00000)-( ) | CAP, Steering Wheel |
| 19 | 157332 | 1 | (00000)-( ) | KEY |
| 20 | 176440 | 4 | (00000)-( ) | BUSHING |
| 21 | 177649 | 1 | (00000)-( ) | WASHER, Compression |
| 22 | 923422 | 1 | (00000)-( ) | LOCKNUT, Hex Full, 5/16-18 |
| 23 | 930540 | 2 | (00000)-( ) | SCREW, Set, Sq.Hd. Cup Pt., 5/16-18 x 5/8 |
| 24 | 1652741 | 1 | (00000)-( ) | GEAR, Steering |
| 25 | 1652743 | 1 | (00000)-( ) | BASE PLATE, Steering |
| 26 | 1652745 | 1 | (00000)-( ) | TOP PLATE, Steering |
| 27 | 1654649 | 1 | (00000)-( ) | SPACER, Stop |
| 28 | 1654907 | 1 | (00000)-( ) | SPACER |
| 29 | 1657003 | 1 | (00000)-( ) | SHAFT ASSY, Steering |
| 30 | 1657248 | 1 | (00000)-( ) | ROD, Steering |
| 31 | 1651787 | 2 | (00000)-( ) | WHEEL & TIRE ASSY (4000 Only) |
| 32 | 1651774 | 2 | (00000)-( ) | WHEEL (4000 Only) |
| 33 | 1651786 | 2 | (00000)-( ) | TIRE (4000 Only) |
| 34 | 156316 | 2 | (00000)-( ) | BEARING (4000 Only) |
| 35 | 1656799 | 1 | (00000)-( ) | DRAG LINK ASSY (Includes Ref. No. 5, 16 & 15) |

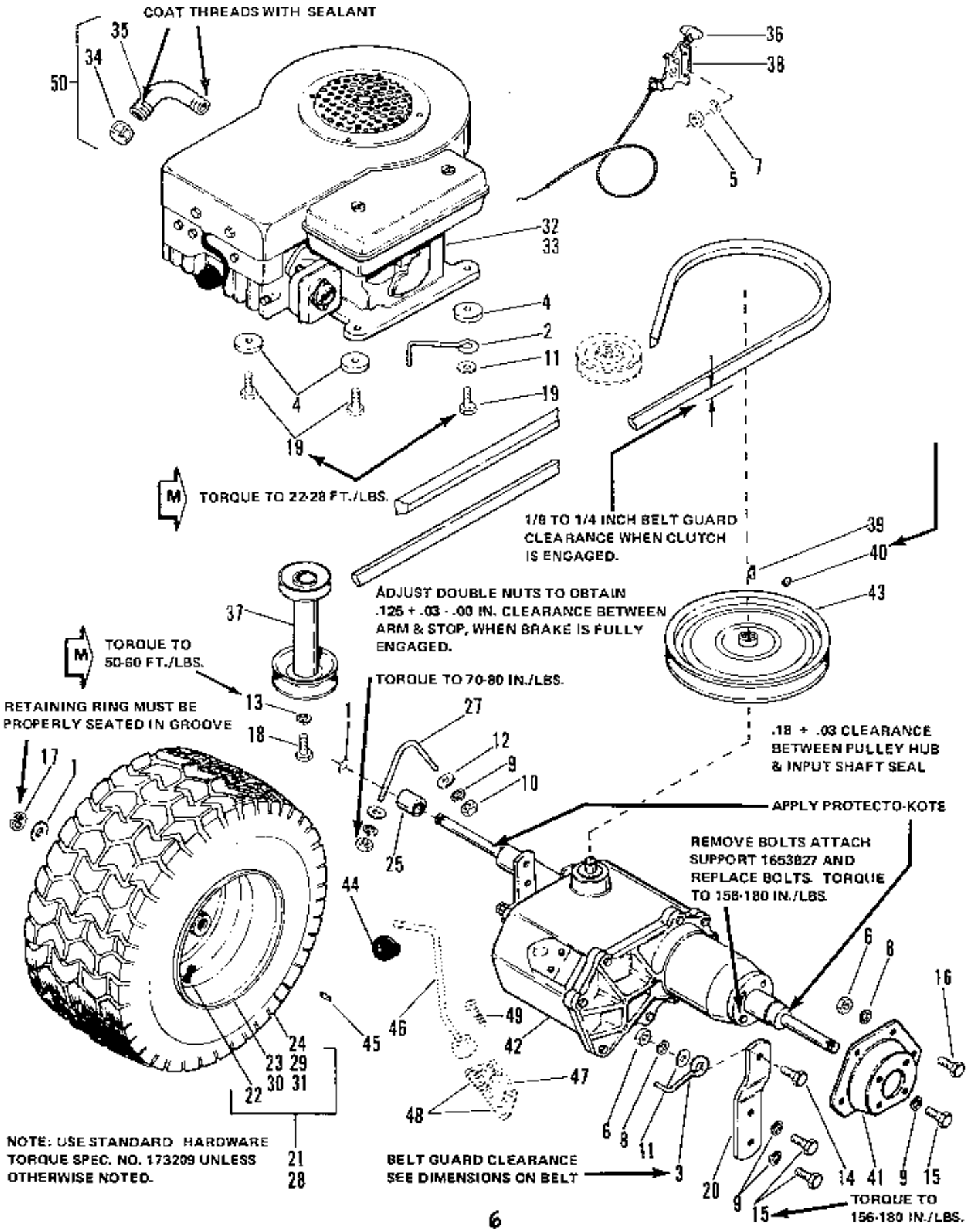
COAT THREADS WITH SEALANT
35
34
50
36
38
7
5
32
33
4
2
11
4
19
19
TORQUE TO 22-28 FT./LBS.
1/8 TO 1/4 INCH BELT GUARD CLEARANCE WHEN CLUTCH IS ENGAGED.
39
40
43
ADJUST DOUBLE NUTS TO OBTAIN .125 + .03 - .00 IN. CLEARANCE BETWEEN ARM & STOP, WHEN BRAKE IS FULLY ENGAGED.
37
TORQUE TO 50-60 FT./LBS.
13
TORQUE TO 70-80 IN./LBS.
RETAINING RING MUST BE PROPERLY SEATED IN GROOVE
18
1
27
12
9
10
17
.18 + .03 CLEARANCE BETWEEN PULLEY HUB & INPUT SHAFT SEAL
APPLY PROTECTO-KOTE
25
REMOVE BOLTS ATTACH SUPPORT 1653827 AND REPLACE BOLTS. TORQUE TO 156-180 IN./LBS.
44
6
8
16
49
46
45
42
24
23 29
30 31
22
47
48
6
8
11
3
20
9
15
14
41
9
15
TORQUE TO 156-180 IN./LBS.
NOTE: USE STANDARD HARDWARE TORQUE SPEC. NO. 173209 UNLESS OTHERWISE NOTED.
21
28
BELT GUARD CLEARANCE SEE DIMENSIONS ON BELT

| Ref. No. | Part No. | Qty. | Serial No. | Description |
|---|---|---|---|---|
| 1 | 154071 | 3 | (00000)-( ) | WASHER |
| 2 | 172844 | 2 | (00000)-( ) | STOP, Belt |
| 3 | 172845 | 1 | (00000)-( ) | STOP, Belt |
| 4 | 172908 | 4 | (00000)-( ) | WASHER |
| 5 | 916622 | 2 | (00000)-( ) | NUT, Hex, 1/4-20 |
| 6 | 916950 | 5 | (00000)-( ) | NUT, Hex, 3/8-16 |
| 7 | 916964 | 2 | (00000)-( ) | LOCKWASHER, Spring, 1/4 |
| 8 | 916965 | 5 | (00000)-( ) | LOCKWASHER, Spring, 3/8 |
| 9 | 917356 | 8 | (00000)-( ) | LOCKWASHER, Spring, 5/16 |
| 10 | 917372 | 2 | (00000)-( ) | NUT, Hex, 5/16-18 |
| 11 | 917378 | 3 | (00000)-( ) | WASHER, Plain, 3/8 |
| 12 | 917642 | 2 | (00000)-( ) | WASHER, Plain, 5/16 |
| 13 | 918199 | 1 | (00000)-( ) | LOCKWASHER, Spring, 7/16 |
| 14 | 920415 | 1 | (00000)-( ) | CAPSCREW, Hex Hd., 3/8-16 x 1-1/4 |
| 15 | 921333 | 4 | (00000)-( ) | CAPSCREW, Hex Hd., 5/16-18 x 1 |
| 16 | 921965 | 4 | (00000)-( ) | CAPSCREW, Hex Hd., 3/8-16 x 3/4 |
| 17 | 927794 | 2 | (00000)-( ) | RING, Retaining, Size No. 75, 3/4 |
| 18 | 928038 | 1 | (00000)-( ) | CAPSCREW, Hex Hd., 7/16-20 x 1-1/4, Gr. 8 |
| 19 | 930603 | 4 | (00000)-( ) | SCREW, Taptite, Washer Hd., 3/8-16 x 1-3/4 |
| 20 | 1653979 | 1 | (00000)-( ) | SUPPORT, Strap |
| 21 | 1654705 | 2 | (00000)-( ) | WHEEL & TIRE ASSY, 18 x 6-1/2-8 (4108 Manual Start Only) |
| 22 | 171270 | 1 | (00000)-( ) | VALVE STEM & CAP |
| 23 | 1654704 | 1 | (00000)-( ) | WHEEL ASSY (4108 Manual Start Only) |
| 24 | 1654706 | 1 | (00000)-( ) | TIRE, 18 x 6-1/2-8 (4108 Manual Start Only) |
| 25 | 1655061 | 1 | (00000)-( ) | SPACER |
| 26 | 1655069 | 1 | (00000)-( ) | "V" BELT |
| 27 | 1655084 | 1 | (00000)-( ) | BOLT, Axle |
| 28 | 1655913 | 2 | (00000)-( ) | WHEEL & TIRE ASSY, 18 x 8-1/2-8 (4108 Electric Start Only) |
| 29 | 1652502 | 1 | (00000)-( ) | TIRE, 18 x 8-1/2-8 (4108 Electric Start Only) (Goodyear) |
| 30 | 1655911 | 1 | (00000)-( ) | WHEEL (4108 Electric Start Only) |
| 31 | 1655916 | 1 | (00000)-( ) | TIRE, 18 x 8-1/2-8 (4108 Electric Start Only) (Carlisle) |
| 32 | | 1 | (00000)-( ) | ENGINE ASSY, 8 H.P. (Electric Srart Synchro-Balanced) |
| 33 | | 1 | (00000)-( ) | ENGINE, 8 H.P., (Manual Start Synchro-Balanced) |
| 34 | 901752 | 1 | (00000)-( ) | PIPE, Cap, 3/8 |
| 35 | 1655405 | 1 | (00000)-( ) | OIL DRAIN PIPE |
| 36 | 1656099 | 1 | (00000)-( ) | KNOB |
| 37 | 1657118 | 1 | (00000)-( ) | PULLEY ASSY, Engine |
| 38 | 1657272 | 1 | (00000)-( ) | CONTROL ASSY |
| 39 | 918312 | 1 | (00000)-( ) | KEY, Woodruff, No. 61, 3/16 x 5/8 |
| 40 | 928721 | 1 | (00000)-( ) | SCREW, Set, 5/16-18 x 1/2 |
| 41 | 1653827 | 1 | (00000)-( ) | SUPPORT, L.H. |
| * 42 | | 1 | (00000)-( ) | TRANSMISSION, Peerless '600' |
| 43 | 1656749 | 1 | (00000)-( ) | PULLEY |
| 44 | 8021050 | 1 | (00000)-( ) | BALL, Knob |
| 45 | 8221042 | 2 | (00000)-( ) | KEY, 3/16 x 3/16 x 1-1/2 |
| * 46 | | 1 | (00000)-( ) | LEVER, Shift |
| * 47 | | 1 | (00000)-( ) | BLOCK, Riser |
| * 48 | | 2 | (00000)-( ) | GASKET |
| * 49 | | 3 | (00000)-( ) | SCREW, Washer Hd., 1/4-20 x 1-3/4 |
| 50 | 1658032 | 1 | (00000)-( ) | OIL DRAIN PIPE & CAP SUB-ASSY |

*** NOTE: SEE AUTHORIZED PEERLESS DEALER FOR PARTS AND SERVICE. PEERLESS PARTS ARE NOT AVAILABLE THRU SIMPLICITY.**

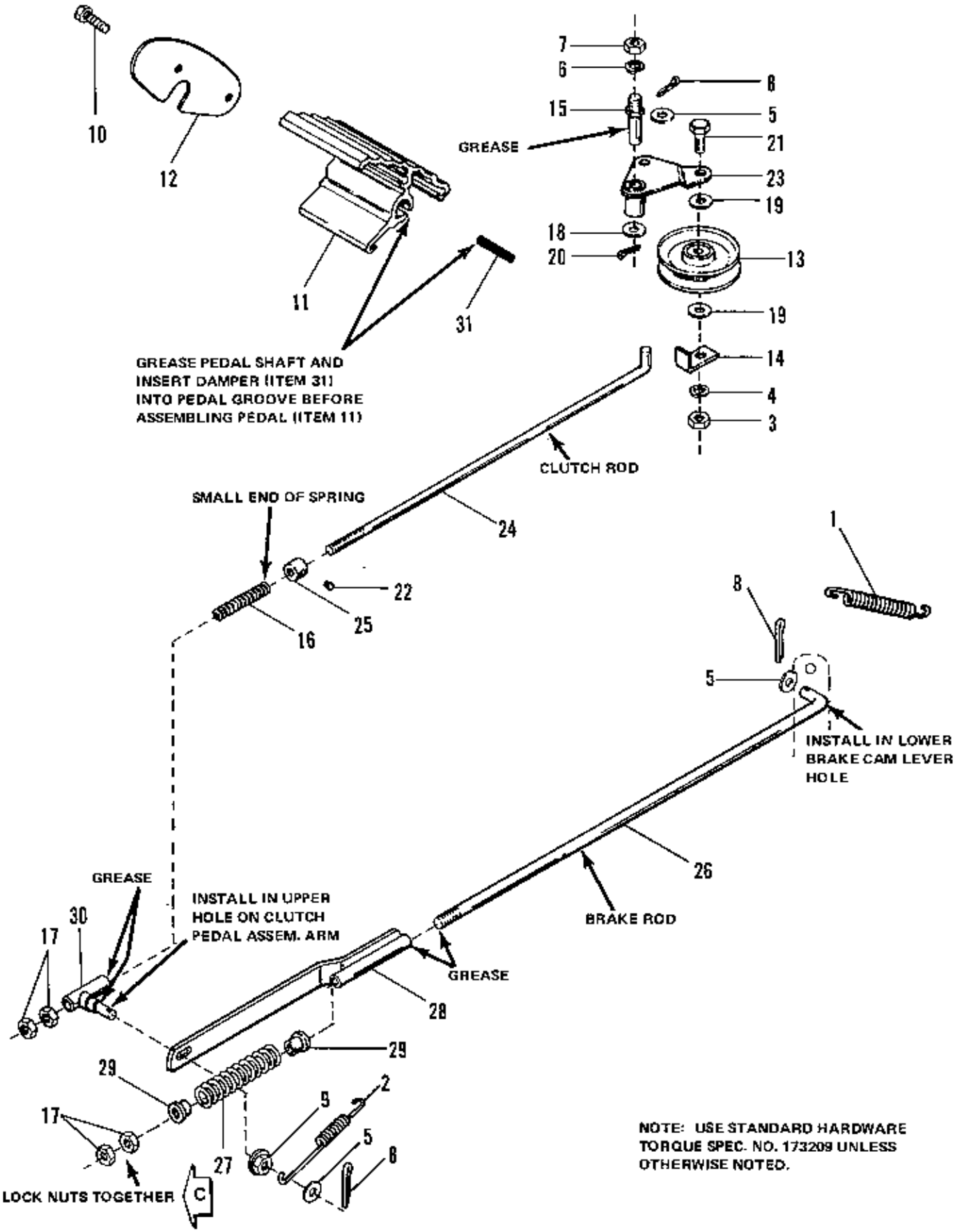


NOTE: USE STANDARD HARDWARE TORQUE SPEC. NO. 173209 UNLESS OTHERWISE NOTED.

| Ref. No. | Part No. | Qty. | Serial No. | Description |
|---|---|---|---|---|
| 1 | 159106 | 1 | (00000)-( ) | SPRING, Tension |
| 2 | 165068 | 1 | (00000)-( ) | SPRING, Return |
| 3 | 916950 | 1 | (00000)-( ) | NUT, Hex, 3/8-16 |
| 4 | 916965 | 1 | (00000)-( ) | LOCKWASHER, Spring, 3/8 |
| 5 | 917377 | 3 | (00000)-( ) | WASHER, Plain, 1/4 |
| 6 | 918199 | 1 | (00000)-( ) | LOCKWASHER, Spring, 7/16 |
| 7 | 918213 | 1 | (00000)-( ) | NUT, Hex, 7/16-14 |
| 8 | 918447 | 3 | (00000)-( ) | PIN, Cotter, 3/32 x 3/4 |
| 9 | 929001 | 1 | (00000)-( ) | LOCKNUT, Flange, 5/16-18 |
| 10 | 927429 | 2 | (00000)-( ) | SCREW, Hex Washer, 1/2-20 x5/8 |
| 11 | 1656852 | 1 | (00000)-( ) | PEDAL, Foot |
| 12 | 1656854 | 1 | (00000)-( ) | PLATE, End |
| 13 | 106716 | 1 | (00000)-( ) | PULLEY, Idler |
| 14 | 106717 | 1 | (00000)-( ) | GUIDE, Belr |
| 15 | 106928 | 1 | (00000)-( ) | STUD |
| 16 | 157041 | 1 | (00000)-( ) | SPRING,Compression |
| 17 | 917372 | 4 | (00000)-( ) | NUT, Hex, 5/16-18 |
| 18 | 917378 | 1 | (00000)-( ) | WASHER, Plain, 3/8 |
| 19 | 917642 | 4 | (00000)-( ) | WASHER, Plain, 5/16 |
| 20 | 918451 | 1 | (00000)-( ) | PIN, Cotter, 1/8 x 3/4 |
| 21 | 921969 | 1 | (00000)-( ) | CAPSCREW, Hex Hd., 3/8-16 x 1-1/2 |
| 22 | 928804 | 1 | (00000)-( ) | SCREW, Set, 1/4-20 x 3/8, Gr. 8 |
| 23 | 1653076 | 1 | (00000)-( ) | IDLER ASSY |
| 24 | 1655055 | 1 | (00000)-( ) | ROD, Clutch |
| 25 | 8191022 | 1 | (00000)-( ) | COLLAR, Set |
| 26 | 1656911 | 1 | (00000)-( ) | ROD, Brake |
| 27 | 1656986 | 1 | (00000)-( ) | SPRING |
| 28 | 1656989 | 1 | (00000)-( ) | GUIDE ASSY, Rod |
| 29 | 1657004 | 2 | (00000)-( ) | SUPPORT, Spring |
| 30 | 1657222 | 1 | (00000)-( ) | GUIDE ASSY, Rod |
| 31 | 1657322 | 1 | (00000)-( ) | DAMPER |

## BRAKE LINKAGE ADJUSTMENT

1. Before adjusting brake linkage, brake cam lever must be properly adjusted on disc brake – refer to group assembly drawing 981247 & 981248.

2. With brake clutch pedal engaged (up and to the rear against stop), disc brake cam lever to the rear against stop and rod guide (Item No. 28) as afar forward as slot will allow, adjust brake rod nut (Item No. 17) until spring (Item No. 27) is snug but not compressed. Lock brake rod nuts (Item No. 16) in position.

## CLUTCH LINKAGE ADJUSTMENT

1. With clutch pedal engaged (Pedal up against stop), apply 15-20 lbs. to force pulley idler (Item No.13) to firmly seat transmission drive belt. Adjust clutch rod nuts (Item No. 17) so clearance between nuts and end of rod guide is 9/16 - 5/8". Lock clutch rod nut (Item No. 17) in position.

2. Fully depress clutch pedal and lock parking brake. Hold clutch rod (Item No. 24) so nuts (Item No. 17) are against rod guide (Item No.30) and position and lock set collar (Item No. 25) so spring (Item No.17) is compressed 7/16-9/16".

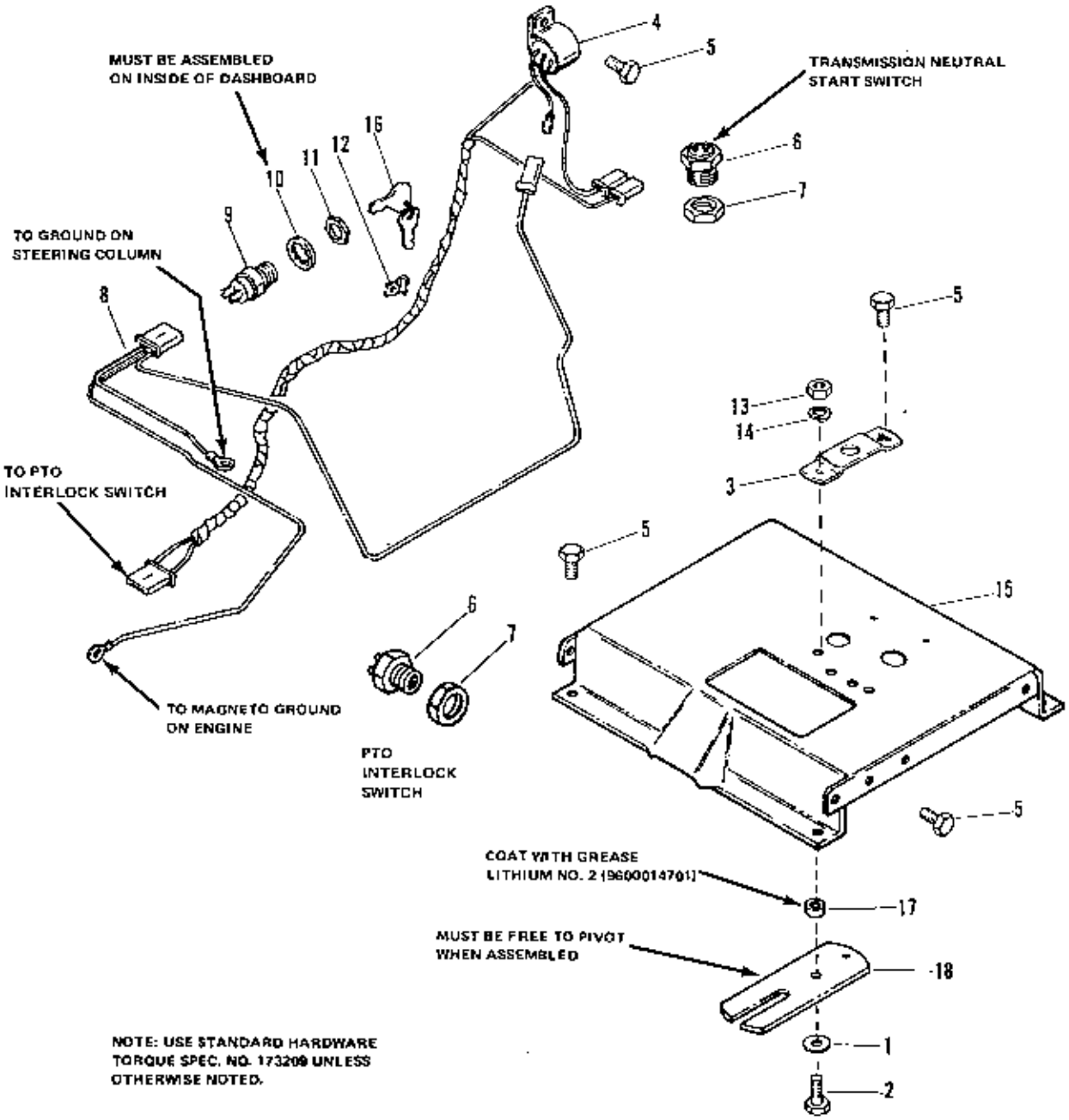
MUST BE ASSEMBLED ON INSIDE OF DASHBOARD
TRANSMISSION NEUTRAL START SWITCH
TO GROUND ON STEERING COLUMN
TO PTO INTERLOCK SWITCH
TO MAGNETO GROUND ON ENGINE
PTO INTERLOCK SWITCH
COAT WITH GREASE LITHIUM NO. 2 (9600014701)
MUST BE FREE TO PIVOT WHEN ASSEMBLED
NOTE: USE STANDARD HARDWARE TORQUE SPEC. NO. 173209 UNLESS OTHERWISE NOTED.
4
5
6
7
8
9
10
11
12
16
13
14
3
15
17
18
1
2

| Ref. No. | Part No. | Qty. | Serial No. | Description |
|---|---|---|---|---|
| 1 | 157643 | 1 | (00000)-( ) | WASHER |
| 2 | 921333 | 1 | (00000)-( ) | CAPSCREW, Hex, 5/16-18 x 1 |
| 3 | 1655600 | 1 | (00000)-( ) | BRACKET, Switch |
| 4 | 1655059 | 1 | (00000)-( ) | IGNITION, Interlock |
| 5 | 927428 | 10 | (00000)-( ) | SCREW, Taptite, Washer Hd., 1/4-20 x 3/8 |
| 6 | 1654634 | 2 | (00000)-( ) | SWITCH, Interlock |
| 7 | 930647 | 2 | (00000)-( ) | NUT, Lock, 9/16-18 |
| 8 | 1655106 | 1 | (00000)-( ) | WIRING HARNESS |
| *9 | 1655057 | 1 | (00000)-( ) | SWITCH, Manual Start |
| 10 | 918906 | 1 | (00000)-( ) | LOCKWASHER, Internal Tooth, 5/8 |
| 11 | 122234 | 1 | (00000)-( ) | NUT, Hex, 5/8-32 (Ignition) |
| 12 | 165073 | 1 | (00000)-( ) | CLIP, Speed |
| 13 | 917372 | 1 | (00000)-( ) | NUT, Hex, 5/16-18 |
| 14 | 917356 | 1 | (00000)-( ) | LOCKWASHER, Spring, 5/16 |
| 15 | 1655087 | 1 | (00000)-( ) | SUPPORT, Frame |
| 16 | 122203 | 1 | (00000)-( ) | KEYS & RING ASSY |
| 17 | 1655085 | 1 | (00000)-( ) | SPACER |
| 18 | 1655086 | 1 | (00000)-( ) | LEVER, Switch |

*Ref. No. 9 Includes Ref. No. 16

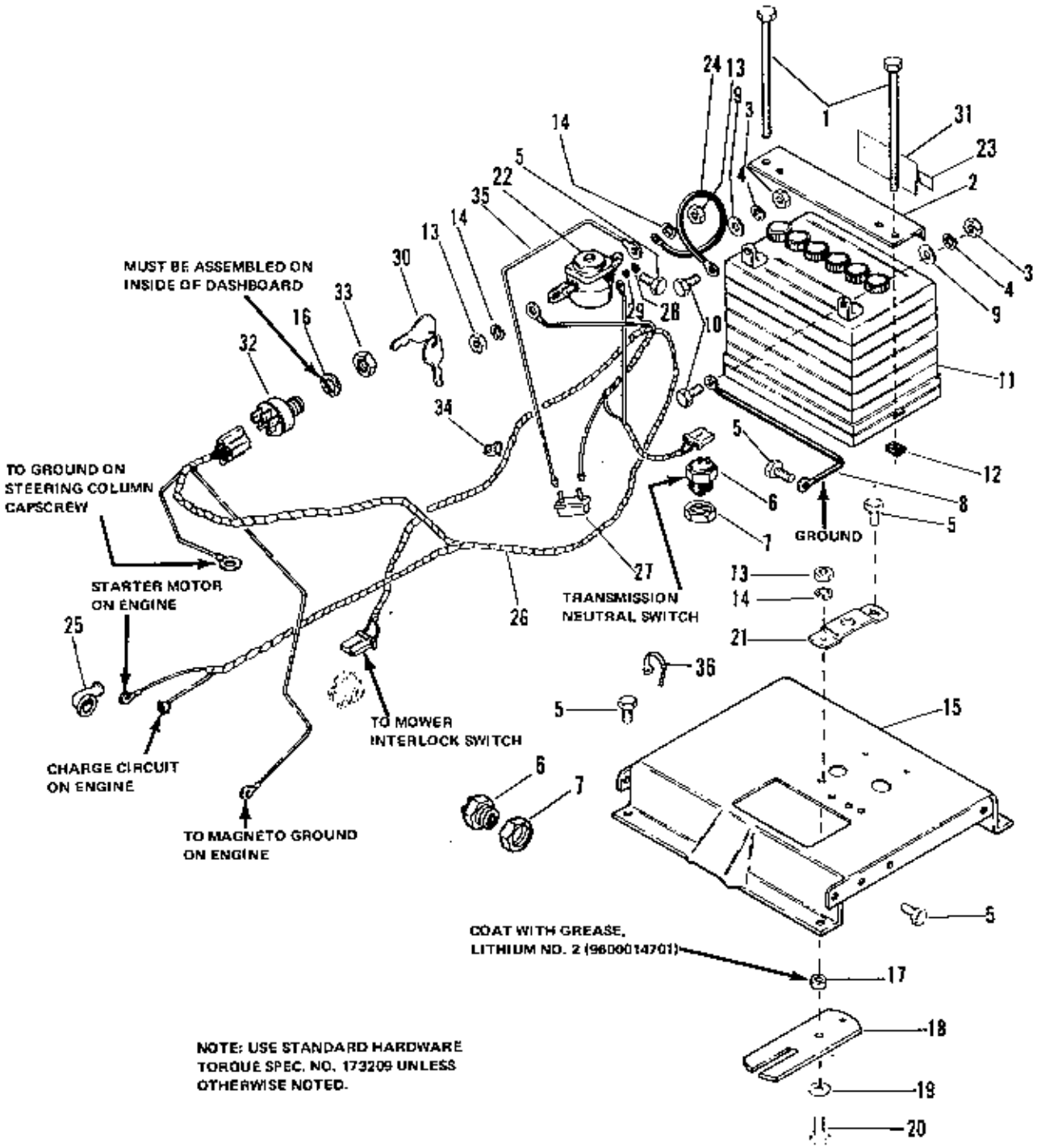
MUST BE ASSEMBLED ON INSIDE OF DASHBOARD
TO GROUND ON STEERING COLUMN CAPSCREW
STARTER MOTOR ON ENGINE
CHARGE CIRCUIT ON ENGINE
TO MAGNETO GROUND ON ENGINE
TO MOWER INTERLOCK SWITCH
TRANSMISSION NEUTRAL SWITCH
GROUND
COAT WITH GREASE, LITHIUM NO. 2 (9600014701)
NOTE: USE STANDARD HARDWARE TORQUE SPEC. NO. 173209 UNLESS OTHERWISE NOTED.

## Electrical Group (Elec. Start, 4108)



| Ref. No. | Part No. | Qty. | Serial No. | Description |
|---|---|---|---|---|
| 1 | 928634 | 2 | (00000)-( ) | CAPSCREW, Hex Hd., 1/4-20 x 7 |
| 2 | 1655890 | 1 | (00000)-( ) | HOLD-DOWN, Battery |
| 3 | 916622 | 2 | (00000)-( ) | NUT, Hex, 1/4-20 |
| 4 | 916964 | 2 | (00000)-( ) | LOCKWASHER, Spring, 5/16 |
| 5 | 927428 | 12 | (00000)-( ) | SCREW, Hex, Washer Hd. 1/4-20 x 3/8 |
| 6 | 1654634 | 2 | (00000)-( ) | SWITCH, Interlock |
| 7 | 930647 | 2 | (00000)-( ) | NUT, Lock, 9/16-18 |
| 8 | 122213 | 1 | (00000)-( ) | CABLE |
| 9 | 917377 | 2 | (00000)-( ) | WASHER, Plain, 1/4 |
| 10 | 923341 | 2 | (00000)-( ) | CAPSCREW, Hex Hd., 1/4-20 |
| *11 | | 1 | (00000)-( ) | BATTERY |
| 12 | 926022 | 2 | (00000)-( ) | NUT, Retainer, 1/4-20 |
| 13 | 917372 | 3 | (00000)-( ) | NUT, Hex, 5/16-18 |
| 14 | 917356 | 3 | (00000)-( ) | LOCKWASHER, Spring, 5/16 |
| 15 | 1655087 | 1 | (00000)-( ) | SUPPORT, Frame |
| 16 | 916906 | 1 | (00000)-( ) | LOCKWASHER, Internal Tooth, 5/8 |
| 17 | 1655085 | 1 | (00000)-( ) | SPACER |
| 18 | 1655086 | 1 | (00000)-( ) | LEVER, Switch |
| 19 | 157643 | 1 | (00000)-( ) | WASHER |
| 20 | 921333 | 1 | (00000)-( ) | CAPSCREW, Hex Hd., 5/16-18 x 1 |
| 21 | 1655600 | 1 | (00000)-( ) | BRACKET, Switch |
| 22 | 122216 | 1 | (00000)-( ) | SOLENOID |
| 24 | 1655622 | 1 | (00000)-( ) | CABLE |
| 25 | 122023 | 1 | (00000)-( ) | COVER, Terminal |
| 26 | 1657351 | 1 | (00000)-( ) | WIRING HARNESS |
| 27 | 172163 | 1 | (00000)-( ) | BREAKER, Circuit |
| 28 | 917415 | 1 | (00000)-( ) | NUT, Hex, Machine, No. 10-32 |
| 29 | 922711 | 1 | (00000)-( ) | LOCKWASHER, External Tooth, No. 10 |
| 30 | 122203 | 1 | (00000)-( ) | KEYS & RING ASSY |
| 32 | 178280 | 1 | (00000)-( ) | SWITCH, Ignition |
| 33 | 122234 | 1 | (00000)-( ) | NUT, Hex, 5/8-32 (Ignition) |
| 34 | 165073 | 1 | (00000)-( ) | CLIP, Speed |
| 35 | 1651031 | 1 | (00000)-( ) | WIRE ASSY |
| 36 | 1604414 | 1 | (00000)-( ) | CABLE, Tie |

*NOTE: For battery replacement order Kit No. 1685059

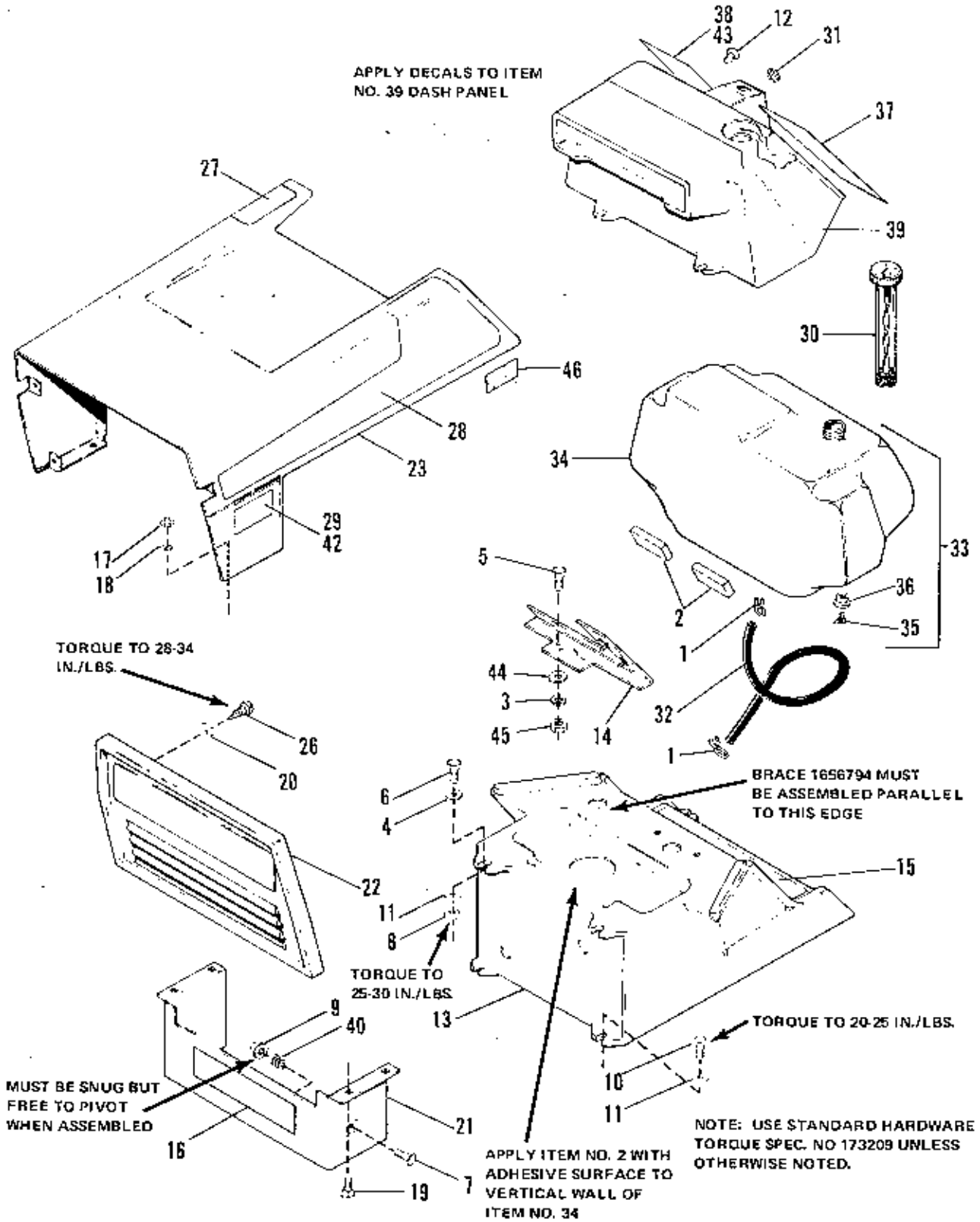
APPLY DECALS TO ITEM NO. 39 DASH PANEL
38
43
12
31
37
39
27
30
46
28
23
34
33
29
42
17
18
5
36
35
2
1
TORQUE TO 28-34 IN./LBS.
44
3
45
14
32
1
26
20
6
4
BRACE 1656794 MUST BE ASSEMBLED PARALLEL TO THIS EDGE
15
22
11
8
TORQUE TO 25-30 IN./LBS.
13
9
40
TORQUE TO 20-25 IN./LBS.
10
11
MUST BE SNUG BUT FREE TO PIVOT WHEN ASSEMBLED
16
21
19
7
APPLY ITEM NO. 2 WITH ADHESIVE SURFACE TO VERTICAL WALL OF ITEM NO. 34
NOTE: USE STANDARD HARDWARE TORQUE SPEC. NO 173209 UNLESS OTHERWISE NOTED.

| Ref. No. | Part No. | Qty. | Serial No. | Description |
|---|---|---|---|---|
| 1 | 154372 | 2 | (00000)-( ) | CLAMP, Hose |
| 2 | 173335 | 2 | (00000)-( ) | PAD, Fuel Tank |
| 3 | 916965 | 2 | (00000)-( ) | LOCKWASHER, Spring, 3/8 |
| 4 | 917377 | 2 | (00000)-( ) | WASHER, Plain, 1/4 |
| 5 | 921210 | 2 | (00000)-( ) | CAPSCREW, Hex Hd., 3/8-16 x 1 |
| 6 | 921961 | 2 | (00000)-( ) | CAPSCREW, Hex Hd., 1/4-20 x 1-1/4 |
| 7 | 921977 | 2 | (00000)-( ) | CAPSCREW, Hex Hd., 5/16-18 x 1-1/4 |
| 8 | 923358 | 2 | (00000)-( ) | NUT, Hex, Lock, 1/4-20 |
| 9 | 929001 | 2 | (00000)-( ) | NUT, Hex, Lock Flange, 5/16-18 |
| 10 | 929783 | 4 | (00000)-( ) | SCREW, Hex, Washer Hd., 1/4-20 x 1 |
| 11 | 921704 | 6 | (00000)-( ) | WASHER, Lock, Dish Type, 1/4 |
| 12 | 931917 | 2 | (00000)-( ) | SCREW, Phillips, 1/4-20 x 3/4 |
| 13 | 1654805 | 1 | (00000)-( ) | DASHBOARD, Bottom |
| 14 | 1656794 | 1 | (00000)-( ) | BRACE ASSY, Dash |
| 15 | 1656870 | 1 | (00000)-( ) | DECAL, Shift |
| 16 | 153166 | 1 | (00000)-( ) | DECAL, Simplicity |
| 17 | 916622 | 4 | (00000)-( ) | NUT, Hex, 1/4-20 |
| 18 | 916964 | 4 | (00000)-( ) | LOCKWASHER, Spring, 1/4 |
| 19 | 923333 | 4 | (00000)-( ) | BOLT, Round Hd., 1/4-20 x 5/8 |
| 20 | 923906 | 4 | (00000)-( ) | WASHER, Plain, No. 8 |
| 21 | 1654559 | 1 | (00000)-( ) | BUMPER |
| 22 | 1654802 | 1 | (00000)-( ) | GRILLE |
| 23 | 1654807 | 1 | (00000)-( ) | HOOD ASSY |
| 26 | 1654998 | 4 | (00000)-( ) | SCREW, Phillips, 10-32 x 3/8 |
| 27 | 1657102 | 1 | (00000)-( ) | DECAL, Hood, R.H. |
| 28 | 1657103 | 1 | (00000)-( ) | DECAL, Hood, L.H. |
| 29 | 1657141 | 2 | (00000)-( ) | DECAL, "4108 Electric Start" (Electric Start) |
| 30 | 171252 | 1 | (00000)-( ) | CAP, Fuel Tank |
| 31 | 928852 | 1 | (00000)-( ) | CAP-PLUG, 1/2 Hole |
| 32 | 1655313 | 1 | (00000)-( ) | HOSE, Fuel |
| 33 | 1655502 | 1 | (00000)-( ) | FUEL TANK ASSY |
| 34 | 1652933 | 1 | (00000)-( ) | TANK, Fuel |
| 35 | 1654929 | 1 | (00000)-( ) | ELBOW |
| 36 | 1654930 | 1 | (00000)-( ) | BUSHING |
| 37 | 1656864 | 1 | (00000)-( ) | DECAL, Dash, L.H. |
| 38 | 1656868 | 1 | (00000)-( ) | DECAL, Dash, R.H. (4108 Electric Start Only) |
| 39 | 1656891 | 1 | (00000)-( ) | DASHBOARD, Top |
| 40 | 8191047 | 2 | (00000)-( ) | SPRING |
| 42 | 1657142 | 2 | (00000)-( ) | DECAL, "4108 Manual Start" (Manual Start) |
| 43 | 1656872 | 1 | (00000)-( ) | DECAL, Dash, R.H. (4108 Manual Start Only) |
| 44 | 924356 | 2 | (00000)-( ) | WASHER, Plain |
| 45 | 916950 | 2 | (00000)-( ) | NUT, Hex, 3/8-16 |
| 46 | 164120 | 2 | (00000)-( ) | PAD, Felt |

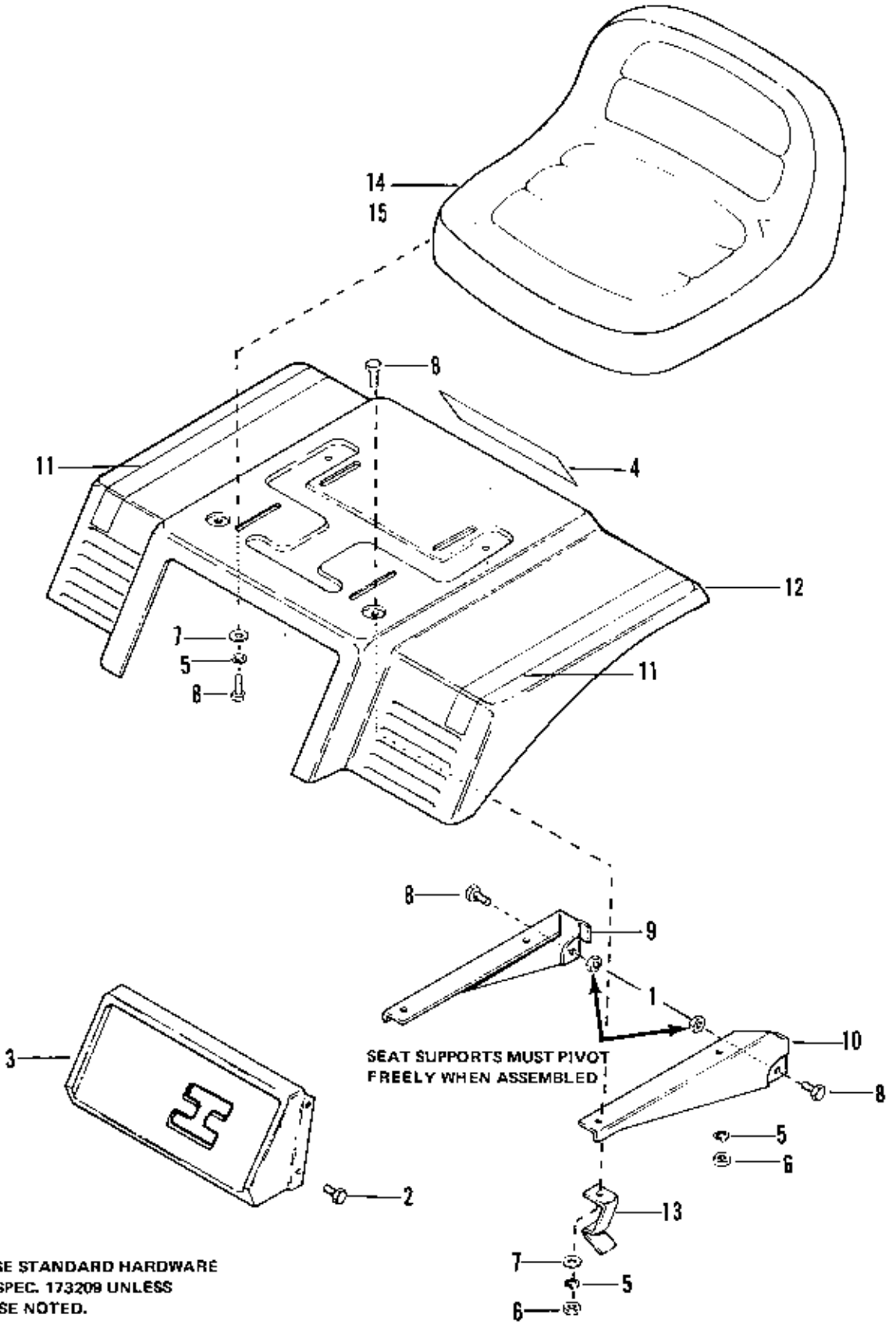


NOTE: USE STANDARD HARDWARE
TORQUE SPEC. 173209 UNLESS
OTHERWISE NOTED.

| Ref. No. | Part No. | Qty. | Serial No. | Description |
|---|---|---|---|---|
| 1 | 923362 | 2 | (00000)-( ) | NUT, Hex Lock, 5/16-18 |
| 2 | 930918 | 4 | (00000)-( ) | SCREW, Taptite, Washer Hd., 1/4-20 x 1/2 |
| 3 | 1654724 | 1 | (00000)-( ) | PANEL, Shift |
| 4 | 153166 | 1 | (00000)-( ) | DECAL, Simplicity |
| 5 | 917356 | 8 | (00000)-( ) | LOCKWASHER, Spring, 5/16 |
| 6 | 917372 | 4 | (00000)-( ) | NUT, Hex, 5/16-18 |
| 7 | 917642 | 5 | (00000)-( ) | WASHER, Plain, 5/16 |
| 8 | 921332 | 10 | (00000)-( ) | CAPSCREW, Hex Hd., 5/16-18 x 3/4 |
| 9 | 1654708 | 1 | (00000)-( ) | SUPPORT, R.H., Seat |
| 10 | 1654709 | 1 | (00000)-( ) | SUPPORT, L.H., Seat |
| 11 | 1657131 | 2 | (00000)-( ) | DECAL, Seat Deck |
| 12 | 1656765 | 1 | (00000)-( ) | DECK, Seat |
| 13 | 1655287 | 1 | (00000)-( ) | LATCH, Spring |
| 14 | 1651879 | 1 | (00000)-( ) | SEAT ASSY (4108 Manual Only) |
| 15 | 1655088 | 1 | (00000)-( ) | SEAT ASSY (4108 Electric Only) |

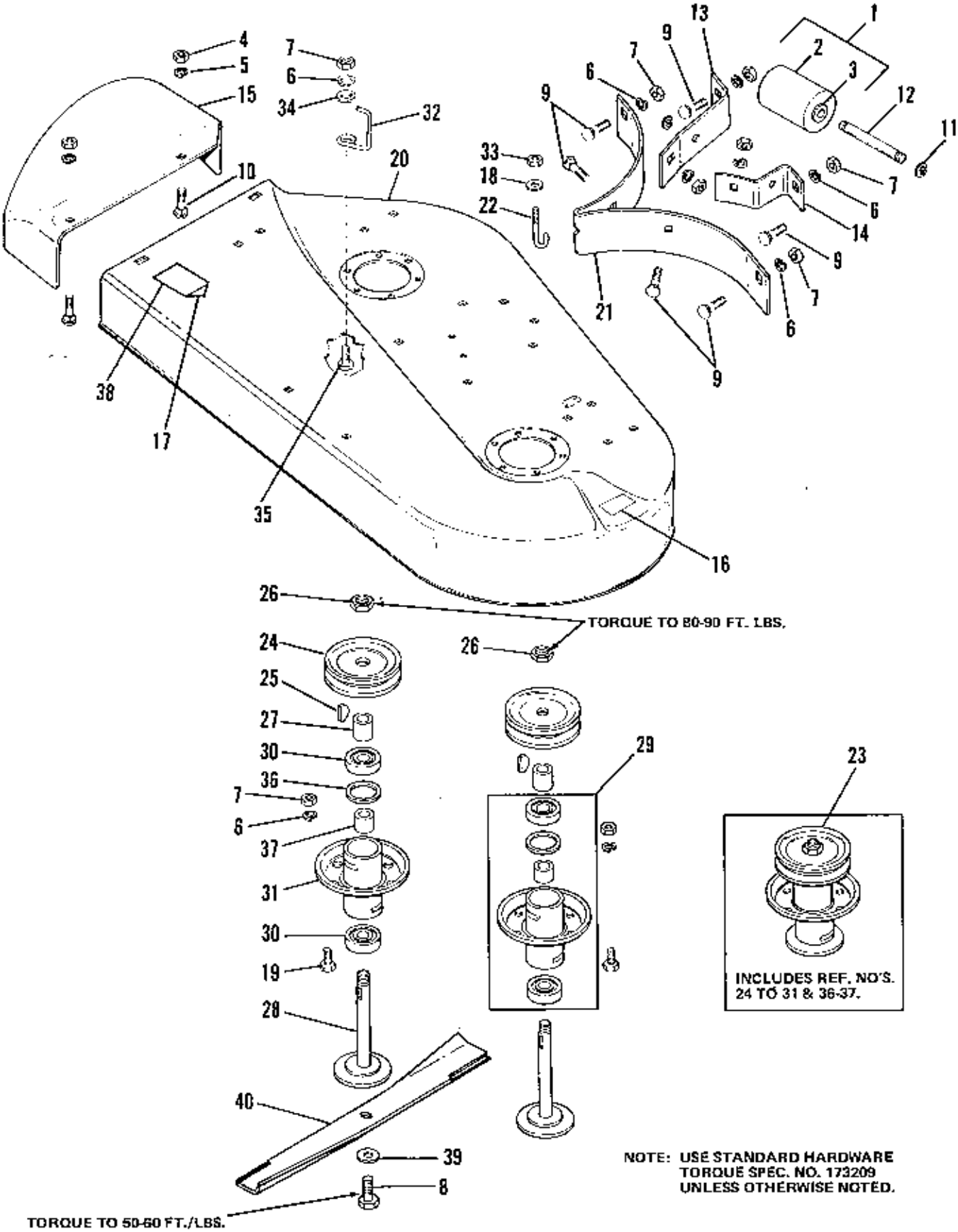


NOTE: USE STANDARD HARDWARE TORQUE SPEC. NO. 173209 UNLESS OTHERWISE NOTED.

## *36" Mower Deck & Arbor Group*

**Simplicity**

*5/78*

| Ref. No. | Part No. | Qty. | Serial No. | Description |
|---|---|---|---|---|
| 1 | 108431 | 1 | (00000)-( ) | ROLLER, w/Bushings |
| 2 | | 1 | (00000)-( ) | ROLLER |
| 3 | 108419 | 2 | (00000)-( ) | BUSHING |
| 4 | 916950 | 2 | (00000)-( ) | NUT, Hex, 3/8-16 |
| 5 | 916965 | 2 | (00000)-( ) | LOCKWASHER, 3/8 |
| 6 | 917356 | 12 | (00000)-( ) | LOCKWASHER, 5/16 |
| 7 | 917372 | 12 | (00000)-( ) | NUT, Hex, 5/16-18 |
| 8 | 922155 | 2 | (00000)-( ) | CAPSCREW, 1/2-20 x 1-1/4 |
| 9 | 920562 | 6 | (00000)-( ) | BOLT, Carriage, Sht. Nk., 5/16-18 x 3/4 |
| 10 | 922110 | 2 | (00000)-( ) | BOLT, Carriage, Sht Nk., 3/8-16 x 3/4 |
| 11 | 1602155 | 2 | (00000)-( ) | RING, E |
| 12 | 1603205 | 1 | (00000)-( ) | SHAFT, Center Roller |
| 13 | 1655096 | 1 | (00000)-( ) | BRACKET, Roller, R.H. |
| 14 | 1655100 | 1 | (00000)-( ) | BRACKET, Roller, L.H. |
| 15 | 1655422 | 1 | (00000)-( ) | DEFLECTOR, Mower |
| 16 | 1656856 | 1 | (00000)-( ) | DECAL, Danger |
| 17 | | 1 | (00000)-( ) | DECAL, OPEI |
| 18 | 917377 | 1 | (00000)-( ) | WASHER, Plain, 1/4 |
| 19 | 921332 | 5 | (00000)-( ) | CAPSCREW, Hex Hd., 5/16-18 x 3/4 |
| 20 | 1653845 | 1 | (00000)-( ) | HOUSING, 36" Mower |
| 21 | 1654551 | 1 | (00000)-( ) | BAFFLE |
| 22 | 1654910 | 1 | (00000)-( ) | SCREW, Baffle Hook |
| 23 | 1655550 | 2 | (00000)-( ) | ARBOR & TUBE ASSY |
| 24 | 106057 | 2 | (00000)-( ) | PULLEY |
| 25 | 918312 | 2 | (00000)-( ) | KEY, Woodruff No. 61 |
| 26 | 922133 | 2 | (00000)-( ) | LOCKNUT, Hex, 3/4-16 |
| 27 | 1653481 | 2 | (00000)-( ) | SPACER |
| 28 | 1655983 | 2 | (00000)-( ) | ARBOR ASSY |
| 29 | 1658039 | 2 | (00000)-( ) | TUBE & BEARING ASSY |
| 30 | 108202 | 4 | (00000)-( ) | BEARING, Ball |
| 31 | 1653490 | 2 | (00000)-( ) | ARBOR & TUBE ASSY |
| 32 | 1657194 | 1 | (00000)-( ) | STOP, Belt |
| 33 | 923358 | 1 | (00000)-( ) | LOCKNUT, Hex, 1/4-20 |
| 34 | 917642 | 1 | (00000)-( ) | WASHER, Plain, 5/16 |
| 35 | 921333 | 1 | (00000)-( ) | CAPSCREW, Hex Hd., 5/16-18 x 1 |
| 36 | 108134 | 2 | (00000)-( ) | RING, Backing |
| 37 | 108201 | 2 | (00000)-( ) | SPACER |
| 38 | 1656857 | 1 | (00000)-( ) | DECAL, Warning |
| 39 | 1654565 | 2 | (00000)-( ) | WASHER, Spring, 35/64 |
| 40 | 1656043 | 2 | (00000)-( ) | BLADE, 36" |

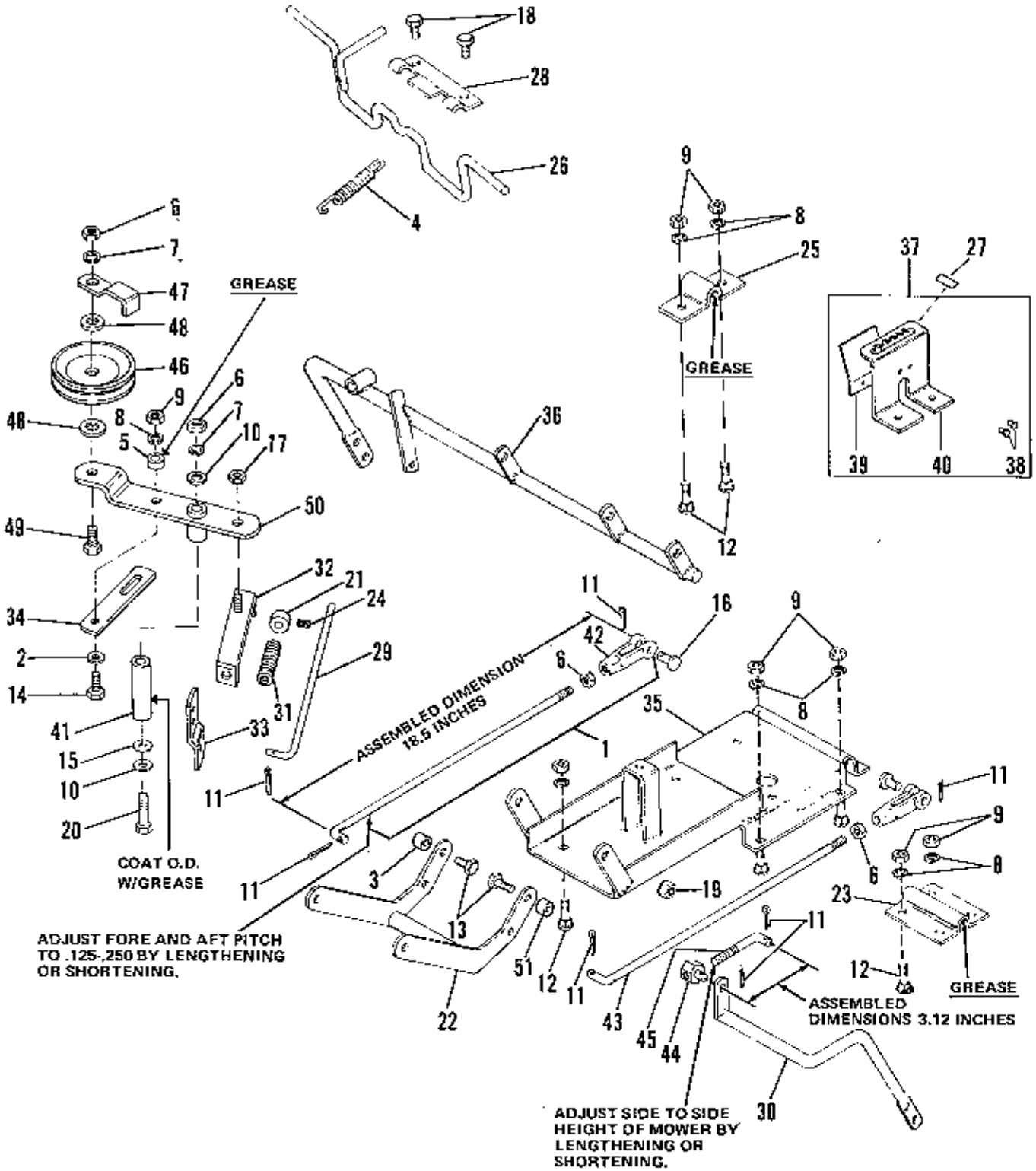


NOTE: USE STANDARD HARDWARE TORQUE SPEC. NO. 173209 UNLESS OTHERWISE NOTED.

## *36" Clutch & Wheel Support Group*

**Simplicity**

*8/76*

| Ref. No. | Part No. | Qty. | Serial No. | Description |
|---|---|---|---|---|
| 1 | 1658040 | 1 | (00000)-( ) | ROD ASSY, Height Adjusting ( Includes Ref. No. 6, 42, & 43) |
| 2 | 153072 | 1 | (00000)-( ) | WASHER |
| 3 | 153073 | 1 | (00000)-( ) | SPACER |
| 4 | 159159 | 1 | (00000)-( ) | SPRING |
| 5 | 165034 | 1 | (00000)-( ) | SPACER |
| 6 | 916950 | 4 | (00000)-( ) | NUT, Hex, 3/8-16 |
| 7 | 916965 | 2 | (00000)-( ) | LOCKWASHER, 3/8 |
| 8 | 917356 | 15 | (00000)-( ) | LOCKWASHER, 5/16 |
| 9 | 917372 | 15 | (00000)-( ) | NUT, Hex, 5/16-18 |
| 10 | 917378 | 2 | (00000)-( ) | WASHER, Plain, 3/8 |
| 11 | 981447 | 7 | (00000)-( ) | PIN, Cotter, 3/32 x 3/4 |
| 12 | 920562 | 14 | (00000)-( ) | BOLT, Carriage, Sht Nk., 5/16 x 3/4 |
| 13 | 921210 | 2 | (00000)-( ) | CAPSCREW, Hex Hd., 3/8-16 x 1 |
| 14 | 921333 | 1 | (00000)-( ) | CAPSCREW,Hex Hd., 5/16-18 x 1 |
| 15 | 8161199 | 1 | (00000)-( ) | WASHER |
| 16 | 923087 | 2 | (00000)-( ) | PIN, Yoke, 3/8 |
| 17 | 923362 | 1 | (00000)-( ) | LOCKNUT, Hex, 5/16-18 |
| 18 | 927428 | 2 | (00000)-( ) | SCREW, Washer Hd., Taptite, 1/4-20 x 3/8 |
| 19 | 930645 | 2 | (00000)-( ) | NUT, Flange, 3/8-16 |
| 20 | 928957 | 1 | (00000)-( ) | CAPSCREW, Hex Hd., 3/8-16 x 2-1/2 Gr. 8 |
| 21 | 8191022 | 1 | (00000)-( ) | COLLAR, Set |
| 22 | 1653716 | 1 | (00000)-( ) | ROCKER ARM ASSY |
| 23 | 1653768 | 1 | (00000)-( ) | CLAMP, Wheel Support |
| 24 | 928804 | 1 | (00000)-( ) | SETSCREW, Sq. Hd., Cup Pt., 1/4-20 x 3/8 |
| 25 | 1654655 | 1 | (00000)-( ) | STRAP |
| 26 | 1657458 | 1 | (00000)-( ) | ROD ASSY, Brake |
| 27 | 1655498 | 1 | (00000)-( ) | DECAL, Mower Height |
| 28 | 1655507 | 1 | (00000)-( ) | SUPPORT, Brake |
| 29 | 171320 | 1 | (00000)-( ) | CLUTCH ROD |
| 30 | 1656057 | 1 | (00000)-( ) | SUPPORT ASSY, L.H. Roller |
| 31 | 163103 | 1 | (00000)-( ) | SPRING |
| 32 | 108662 | 1 | (00000)-( ) | ROD GUIDE |
| 33 | 1656991 | 1 | (00000)-( ) | ARM, Pivot |
| 34 | 1656998 | 1 | (00000)-( ) | LEVER, Brake |
| 35 | 1657000 | 1 | (00000)-( ) | SUPPORT ASSY, Mower |
| 36 | 1657006 | 1 | (00000)-( ) | SUPPORT ASSY, R.H. Roller |
| 37 | 1657019 | 1 | (00000)-( ) | QUADRANT ASSY |
| 38 | 928706 | 2 | (00000)-( ) | RIVET |
| 39 | 1602200 | 1 | (00000)-( ) | SPRING, Mower Control |
| 40 | 1653717 | 1 | (00000)-( ) | QUADRANT |
| 41 | 1657242 | 1 | (00000)-( ) | SPACER |
| 42 | 108157 | 2 | (00000)-( ) | CLEVIS |
| 43 | 1654411 | 2 | (00000)-( ) | ROD, Height Adjustment |
| 44 | 108512 | 1 | (00000)-( ) | PIVOT |
| 45 | 1655811 | 1 | (00000)-( ) | ROD, Bolt |
| 46 | 106716 | 1 | (00000)-( ) | PULLEY, Idler |
| 47 | 106717 | 1 | (00000)-( ) | BELT GUIDE |
| 48 | 917642 | 2 | (00000)-( ) | WASHER, Plain, 5/16 |
| 49 | 921969 | 1 | (00000)-( ) | CAPSCREW, Hex Hd., 3/8-16 x 1-1/2 |
| 50 | 1657241 | 1 | (00000)-( ) | LEVER, Clutch |
| 51 | 118335 | 1 | (00000)-( ) | SPACER |

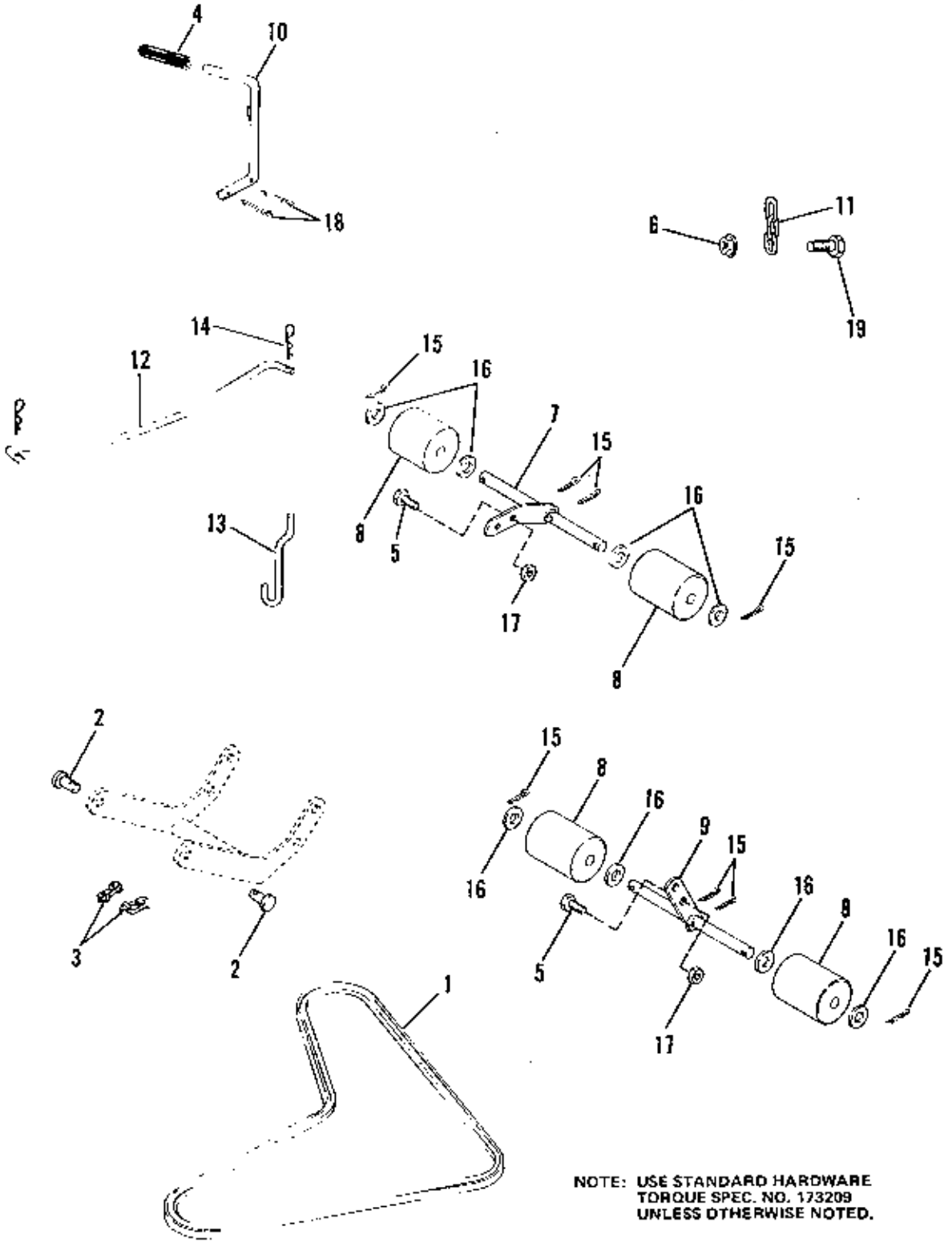


NOTE: USE STANDARD HARDWARE
TORQUE SPEC. NO. 173209
UNLESS OTHERWISE NOTED.

| Ref. No. | Part No. | Qty. | Serial No. | Description |
|---|---|---|---|---|
| 1 | 108505 | 1 | (00000)-( ) | V-BELT |
| 2 | 155306 | 2 | (00000)-( ) | PIN |
| 3 | 176012 | 2 | (00000)-( ) | CLIP, Safety Pin |
| 4 | 176933 | 1 | (00000)-( ) | HANDLE, Grip |
| 5 | 921210 | 4 | (00000)-( ) | CAPSCREW, Hex Hd., 3/8-16 x 1 |
| 6 | 929001 | 1 | (00000)-( ) | NUT, Flange, 3/8-16 |
| 7 | 1655097 | 1 | (00000)-( ) | SHAFT ASSY, R.H. Roller |
| 8 | 1655098 | 4 | (00000)-( ) | ROLLER |
| 9 | 1655099 | 1 | (00000)-( ) | SHAFT ASSY, L.H. Roller |
| 10 | 1656096 | 1 | (00000)-( ) | ROD, Control |
| 11 | 1656835 | 1 | (00000)-( ) | CHAIN, Lift |
| 12 | 1656999 | 1 | (00000)-( ) | ROD |
| 13 | 1657015 | 1 | (00000)-( ) | ROD, Lift |
| 14 | 106787 | 2 | (00000)-( ) | CLIP, Spring (Serviced in 5 pk) |
| 15 | 918452 | 8 | (00000)-( ) | PIN, Cotter, 1/8 x 1 |
| 16 | 919387 | 8 | (00000)-( ) | WASHER, Plain, 5/16 |
| 17 | 923428 | 4 | (00000)-( ) | LOCKNUT, Hex, 3/8-16 |
| 18 | 918448 | 2 | (00000)-( ) | PIN, Cotter, 3/32 x 1 |
| 19 | 921333 | 1 | (00000)-( ) | CAPSCREW, Hex Hd., 5/16-18 x 1 |

A-1745
Model 657

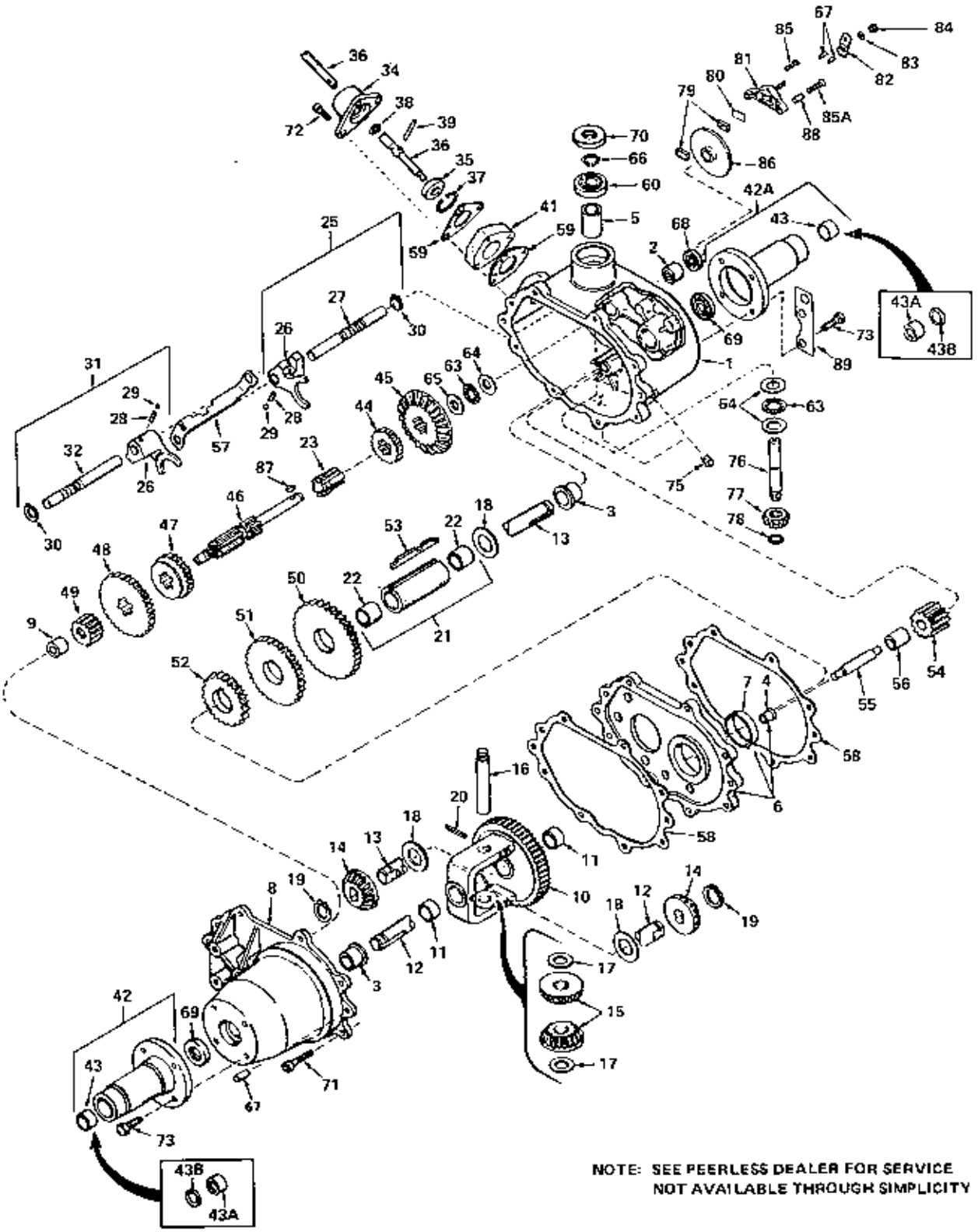


NOTE: SEE PEERLESS DEALER FOR SERVICE
NOT AVAILABLE THROUGH SIMPLICITY

*Transaxle Model No. 657*

**Simplicity**

*8-76*

| Ref. No. | Part No. | Qty. | Serial No. | Description |
|---|---|---|---|---|
| 1 | 770063 | | (00000)-( ) | CASE ASSEMBLY, Transaxle (Incl. Nos. 2, 3, & 5) |
| 2 | 780065 | | (00000)-( ) | BEARING, Needle |
| 3 | 780059 | | (00000)-( ) | BEARING, Bronze |
| 4 | 780060 | | (00000)-( ) | BEARING, Bronze |
| 5 | 780061 | | (00000)-( ) | BEARING, Bronze |
| 6 | 786033 | | (00000)-( ) | PLATE ASSEMBLY, Center (Incl. Nos. 4 & 7) |
| 7 | 780062 | | (00000)-( ) | BEARING, Bronze |
| 8 | 772042 | | (00000)-( ) | COVER ASSEMBLY, Transaxle (Incl. Nos. 3 & 9) |
| 9 | 780063 | | (00000)-( ) | BEARING, Needle |
| 10 | 778053 | | (00000)-( ) | GEAR ASSEMBLY, Differential (Incl. No. 11) |
| 11 | 780064 | | (00000)-( ) | BEARING, Bronze |
| 12 | 774352 | | (00000)-( ) | AXLE, L.H. |
| 13 | 774299 | | (00000)-( ) | AXLE, R.H. |
| 14 | 778067 | | (00000)-( ) | GEAR, Bevel |
| 15 | 778068 | | (00000)-( ) | PINION, Bevel |
| 16 | 786034 | | (00000)-( ) | PIN, Drive |
| 17 | 780065 | | (00000)-( ) | WASHER, Thrust |
| 18 | 780001 | | (00000)-( ) | WASHER, Thrust |
| 19 | 788038 | | (00000)-( ) | RING, Snap |
| 20 | 792040 | | (00000)-( ) | PIN, Roll |
| 21 | 786035 | | (00000)-( ) | SLEEVE ASSEMBLY, Countershaft (Incl. No. 22) |
| 22 | 780066 | | (00000)-( ) | BEARING, Bronze |
| 23 | 776090 | | (00000)-( ) | SHAFT, Idler |
| 25 | 784079 | | (00000)-( ) | ROD ASSEMBLY, Shift (1st & Rev.) (Incl. No. 26-30) |
| 26 | 784004 | | (00000)-( ) | FORK, Shift |
| 27 | 784083 | | (00000)-( ) | ROD, Shift |
| 28 | 792003 | | (00000)-( ) | SPRING |
| 29 | 792004 | | (00000)-( ) | BALL, Steel |
| 30 | 792017 | | (00000)-( ) | RING, Snap |
| 31 | 784084 | | (00000)-( ) | ROD ASSEMBLY, Shift (2nd & 3rd) (Inc. Nos. 26,28,29,30,&32) |
| 32 | 784085 | | (00000)-( ) | ROD, Shift |
| 34 | 784088 | | (00000)-( ) | HOUSING, Shift Lever |
| 35 | 784094 | | (00000)-( ) | KEEPER, Shift Lever |
| 36 | 784283 | | (00000)-( ) | LEVER, Shift |
| 37 | 792016 | | (00000)-( ) | RING, Snap |
| 38 | 792001 | | (00000)-( ) | RING, Quad |
| 39 | 792049 | | (00000)-( ) | PIN, Drive |
| 41 | 786057 | | (00000)-( ) | BLOCK, Riser |
| 42 | 782036A | | (00000)-( ) | HOUSING ASSEMBLY, Axle (Incl. No. 43) |
| 42A | 782043 | | (00000)-( ) | HOUSING ASSEMBLY, Axle (Incl. No. 43) |
| 43 | 780091 | | (00000)-( ) | BEARING & SEAL ASSEMBLY, Needle (See Note 1) |
| 43A | 530105 | | (00000)-( ) | BEARING, Needle |
| 43B | 788042 | | (00000)-( ) | SEAL, Oil |
| 44 | 778024 | | (00000)-( ) | GEAR (16 Teeth) |
| 45 | 778057 | | (00000)-( ) | GEAR, Bevel (33Teeth) |

**NOTE: SEE PEERLESS DEALER FOR SERVICE**
**NOT AVAILABLE THROUGH SIMPLICITY**

A-1745
Model 657

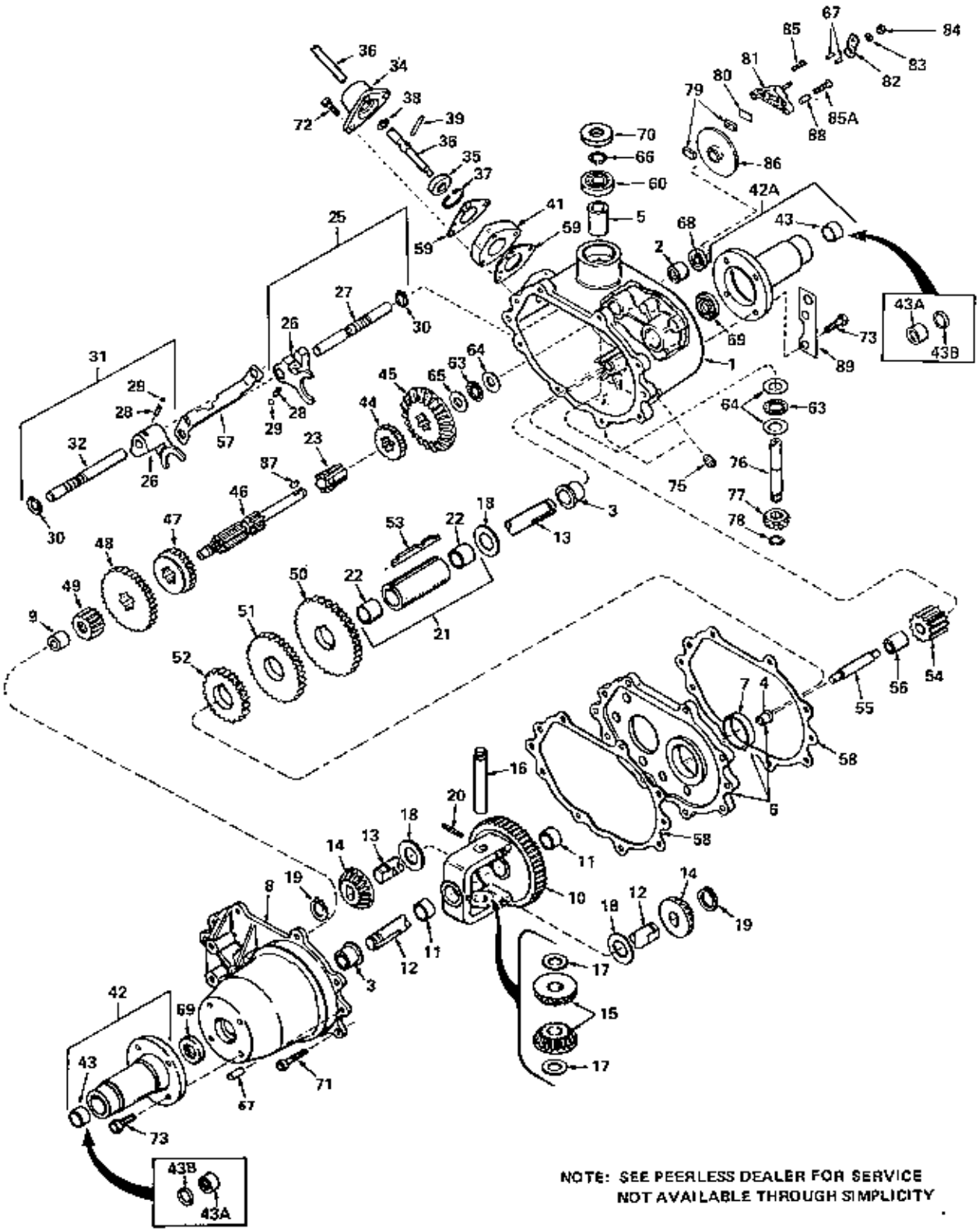


NOTE: SEE PEERLESS DEALER FOR SERVICE
NOT AVAILABLE THROUGH SIMPLICITY

| Ref. No. | Part No. | Qty. | Serial No. | Description |
|---|---|---|---|---|
| 46 | 776138 | | (00000)-( ) | SHAFT, Shifter and Brake |
| 47 | 778058 | | (00000)-( ) | GEAR, Shifting (2nd and 3rd) |
| 48 | 778059 | | (00000)-( ) | GEAR, Shifting (1st and Rev.) |
| 49 | 778060 | | (00000)-( ) | GEAR, Spur (12 Teeth) |
| 50 | 778061 | | (00000)-( ) | GEAR, Countershaft Drive (39 Teeth) |
| 51 | 778062 | | (00000)-( ) | GEAR, Countershaft (34 Teeth) |
| 52 | 778063 | | (00000)-( ) | GEAR, Countershaft (25 Teeth) |
| 53 | 792031A | | (00000)-( ) | KEY, Countershaft |
| 54 | 778064 | | (00000)-( ) | IDLER, Reverse |
| 55 | 776057 | | (00000)-( ) | SHAFT, Reverse Idler |
| 56 | 786036 | | (00000)-( ) | SPACER, Reverse Idler |
| 57 | 784087 | | (00000)-( ) | STOP, Shifter |
| 58 | 788033 | | (00000)-( ) | GASKET, Case and Cover |
| 59 | 788003 | | (00000)-( ) | GASKET, Shift Lever Housing |
| 60 | 780093 | | (00000)-( ) | BEARING, Ball |
| 63 | 780071 | | (00000)-( ) | BEARING, Thrust |
| 64 | 780072 | | (00000)-( ) | WASHER, Thrust |
| 65 | 780073 | | (00000)-( ) | WASHER, Thrust |
| 66 | 792035 | | (00000)-( ) | RING, Snap |
| 67 | 786026 | | (00000)-( ) | PIN, Dowel |
| 68 | 788043 | | (00000)-( ) | SEAL, Oil |
| 69 | 788009 | | (00000)-( ) | SEAL, Oil |
| 70 | 788035 | | (00000)-( ) | SEAL, Oil |
| 71 | 792036 | | (00000)-( ) | CAPSCREW, Socket Hd., 1/4-20 x 1 1/4 |
| 72 | 792051 | | (00000)-( ) | CAPSCREW, Socket Hd., 1/4-20 x 1 3/4 |
| 73 | 792037 | | (00000)-( ) | SCREW, Hex Hd., Sems, 5/16-18 x 1 |
| 75 | 792039 | | (00000)-( ) | PLUG, Pipe, 1/8 |
| 76 | 776103 | | (00000)-( ) | SHAFT, Input |
| 77 | 778077 | | (00000)-( ) | PINION, Input |
| 78 | 788040 | | (00000)-( ) | RING, Retaining |
| 79 | 790006 | | (00000)-( ) | PAD, Brake |
| 80 | 790007 | | (00000)-( ) | PLATE, Brake Pad |
| 81 | 790005 | | (00000)-( ) | HOLDER, Brake Pad |
| 82 | 790019 | | (00000)-( ) | LEVER, Brake |
| 83 | 792076 | | (00000)-( ) | WASHER, Flat |
| 84 | 792075 | | (00000)-( ) | LOCKNUT |
| 85 | 792073 | | (00000)-( ) | CAPSCREW, Hex Hd., Thread Forming, 1/4-20 x 1 1/4 |
| 85A | 792085 | | (00000)-( ) | SCREW, Hex Hd., Thread Forming, 1/4-20 x 2 1/4 |
| 86 | 790009 | | (00000)-( ) | DISK, Brake |
| 87 | 792045 | | (00000)-( ) | KEY, Woodruff No. 61 |
| 88 | 786066 | | (00000)-( ) | SPACER |
| 89 | 786073 | | (00000)-( ) | BRACKET, Spring Anchor |

NOTE 1: The No. 780091 Bearing and Seal Assembly Can Be Used Interchangeably With The Separate No. 530105 Bearing and The Separate No. 788042 Seal.

NOTE: SEE PEERLESS DEALER FOR SERVICE
NOT AVAILABLE THROUGH SIMPLICITY

# TORQUE SPECIFICATION FOR STANDARD MACHINE HARDWARE

## Tolerance ±10%

| SIZE | SAE GRADE #2 | | SAE GRADE #5 | | SAE GRADE #8 | |
|---|---|---|---|---|---|---|
| 8-32 | 19 | In./Lbs. | 30 | In./Lbs. | 41 | In./Lbs. |
| 8-36 | 20 | " | 31 | " | 43 | " |
| 10-24 | 27 | " | 43 | " | 60 | " |
| 10-32 | 31 | " | 49 | " | 68 | " |
| 1/4-20 | 66 | " | 8 | Ft./Lbs. | 12 | Ft./Lbs. |
| 1/4-28 | 76 | " | 10 | " | 14 | " |
| 5/16-18 | 11 | Ft./Lbs. | 17 | " | 25 | " |
| 5/16-24 | 12 | " | 19 | " | 25 | " |
| 3/8-16 | 20 | " | 30 | " | 45 | " |
| 3/8-24 | 23 | " | 35 | " | 50 | " |
| 7/16-14 | 30 | " | 50 | " | 70 | " |
| 7/16-20 | 35 | " | 55 | " | 80 | " |
| 1/2-13 | 50 | " | 75 | " | 110 | " |
| 1/2-20 | 55 | " | 90 | " | 120 | " |
| 9/16-20 | 65 | " | 110 | " | 150 | " |
| 9/16-18 | 75 | " | 120 | " | 170 | " |
| 5/8-11 | 90 | " | 150 | " | 220 | " |
| 5/8-18 | 100 | " | 180 | " | 240 | " |
| 3/4-10 | 160 | " | 260 | " | 386 | " |
| 3/4-16 | 180 | " | 300 | " | 420 | " |
| 7/8-9 | 140 | " | 400 | " | 600 | " |
| 7/8-14 | 155 | " | 440 | " | 660 | " |
| 1-8 | 220 | " | 580 | " | 900 | " |
| 1-12 | 240 | " | 640 | " | 1,000 | " |

NOTES:

1. These torque values are to be used for all Simplicity hardware excluding: Locknuts, self-tapping screws, thread forming screws, and sheet metal screws.

2. Unless otherwise noted on assembly drawings all torque values must meet this specification.

BOLT HEAD MARKING

S.A.E. GRADE:

2

5

8