Attachment Illustrated Parts List

Simplicity®

MASSEY FERGUSON
LAWN & GARDEN EQUIPMENT

AGCO
LAWN & GARDEN EQUIPMENT

Attachment

Mfg. No.	Description
1695169	Catcher, Clean Sweep, Triple

Simplicity
MANUFACTURING, INC.
500 N. Spring Street / PO Box 997
Port Washington, WI 53074-0997 USA

www.simplicitymfg.com

© Copyright 2007 Simplicity Manufacturing, Inc. All Rights Reserved. Printed In USA.

Part No.: 1734812
Rev. 04/2007
TP 400-4533-00-AT-SMA

PRODUCT COMPONENTS **PAGES**

Triple Catcher Assembler 4

Torque Specification Chart ..... Inside Back Cover

Triple Catcher Assembler

NOTE: Unless noted otherwise, use the standard hardware torque specification chart.

1695169

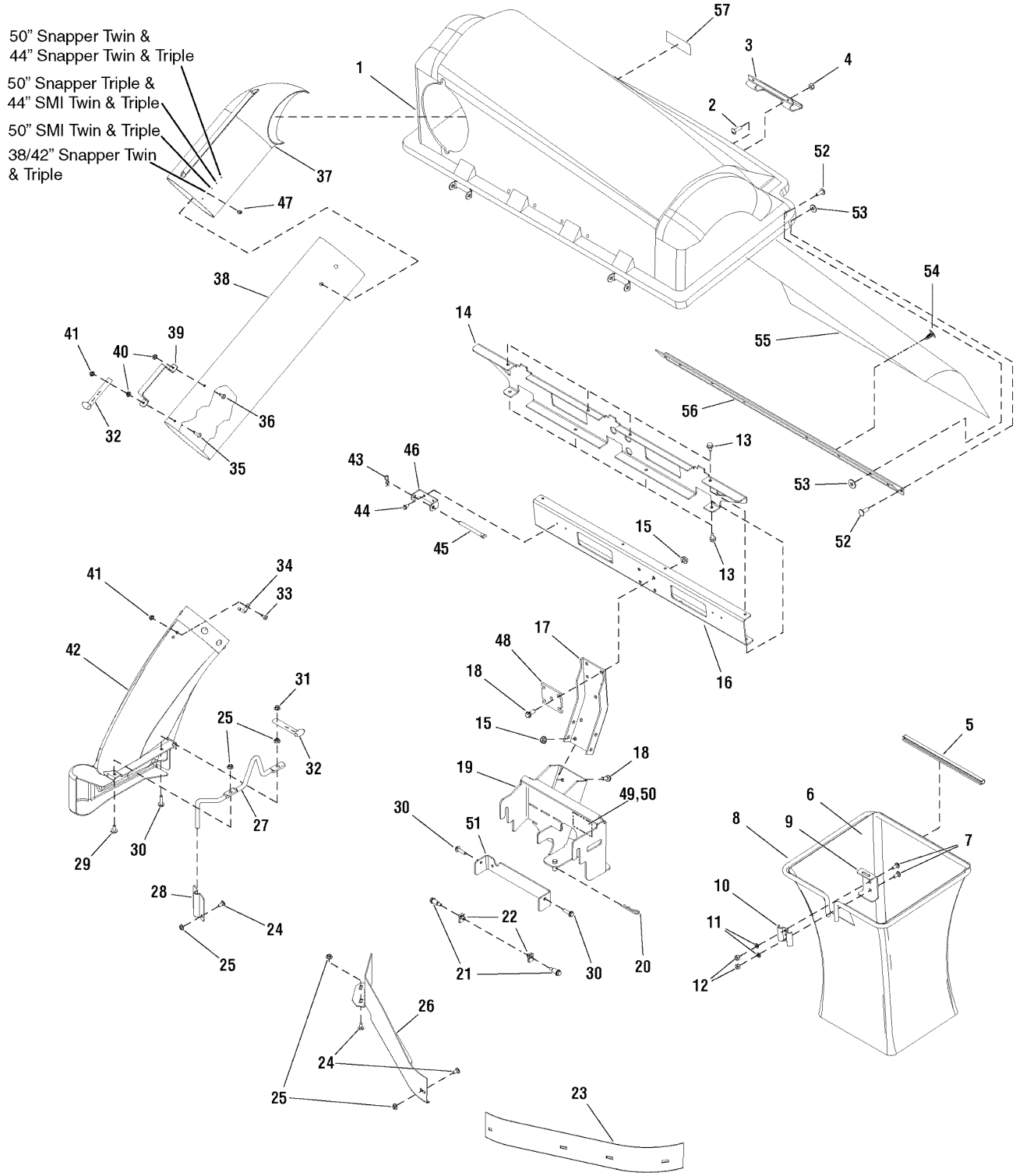

The above parts group applies to the following Mfg. Nos.:

1695169 - Catcher

Copyright © 2007 by Briggs and Stratton Corporation
Milwaukee, WI, USA. All rights reserved

Triple Catcher Assembler

REF NO	PART NO.	QTY.	DESCRIPTION
1	1733546SM	1	COVER ASSEMBLY, Triple Catcher
2	1960404SM	2	SCREW, Truss Head Phillips, 10 - 24 x 3/4
3	054537MA	1	HANDLE, Plastic
4	1933896SM	2	NUT, Hex Lock, 10-24 w/Nylon Insert
5	1733709SM	3	CLIP, Tube Grass Bag
6	1733695SM	3	BAG, Triple Regular
7	1931333SM	6	BOLT, Carriage, 5/16 - 18 x 3/4, G5
8	1733517SM	3	HOOP, Triple
9	1703807ASM	3	HANGER, Grass Bag
10	1672023ASM	3	CLAMP, Grass Bag Plain
11	1917356SM	6	LOCKWASHER, Spring, 5/16
12	1917372SM	6	NUT, Hex, 5/16 - 18
13	1664847SM	8	SCREW, Hex Washer Head Taptite, 5/16 - 18 x 3/4
14	1733624ASM	1	BRACKET, Tab Cross Support Triple
15	1928352SM	8	NUT, Hex Whiz Lock Flange, 3/8 - 16 (Included in Ref. No. 58)
16	1733623ASM	1	CHANNEL, Cross Support Triple
17	1707526ASM	1	SUPPORT, Upright
18	1934654SM	8	SCREW, Hex Whiz Lock Flange, 3/8 - 16 x 1 (Included in Ref. No. 58)
19	1733627SM	1	SUPPORT ASSEMBLY
20	1960033SM	1	CLIP, Hair Pin, 1/8 DIA (Included in Ref. No. 58)
21	1728976SM	2	BOLT, Shoulder, 5/16 - 18 (Included in Ref. No. 58)
22	1960717SM	2	NUT, Speed, 5/16 - 18 (Included in Ref. No. 58)
23	1716870ASM	1	BAFFLE, Blowout L.H. 50" Mower Deck
23	1716879ASM	1	BAFFLE, Blowout L.H. 44" Mower Deck
24	1931332SM	9	BOLT, Carriage, 5/16 - 18 x 5/8 (Included in Ref. No. 58)
25	1927557SM	11	NUT, Hex Whiz Lock Flange, 5/16 - 18 (Qty. of 9 included in Ref. No. 58)
26	1726364ASM	1	BAFFLE, Blowout R.H. 50" Mower Deck
26	1731990ASM	1	BAFFLE, Blowout R.H. 44" Mower Deck
27	1733946SM	1	ROD, Boot Mount, Deflector Prop, 44/50"
28	1726578ASM	1	PLATE, Chute Rod (Included in Ref. No. 58)
29	1960371SM	1	SCREW, Hex Head, 5/16 - 18 x 3/4
30	1930595SM	3	SCREW, Hex Whiz Lock Flange, 5/16 - 18 x 1-1/4 (Qty. of 2 included in Ref. No. 58)
31	1935048SM	1	NUT, Hex Flange Two-Way Lock, 5/16 - 18
32	2171600SM	2	STRAP, Hood
33	1960252SM	1	BOLT, Carriage, 1/4 - 20 x 5/8
34	054563MA	1	PIN, Latch
35	004x71MA	1	SCREW, 1/4 - 20 x 1
36	004x24MA	1	SCREW, 1/4 - 20 x 1/2
37	1733885SM	1	ELBOW, Upper Tube Poly
38	1732552SM	1	TUBE, Clear Poly
39	054416ZMA	1	HANDLE, Connect Tube
40	1928372SM	2	NUT, Hex Keps, 1/4 - 20
41	1930642SM	2	NUT, Hex Flange Top-Lock, 1/4 - 20
42	1731426SM	1	TUBE, Boot Poly

Footnotes

The above parts group applies to the following Mfg. Nos.:
1695169 - Catcher

Copyright © 2007 by Briggs and Stratton Corporation
Milwaukee, WI, USA. All rights reserved

Triple Catcher Assembler

NOTE: Unless noted otherwise, use the standard hardware torque specification chart.

1695169

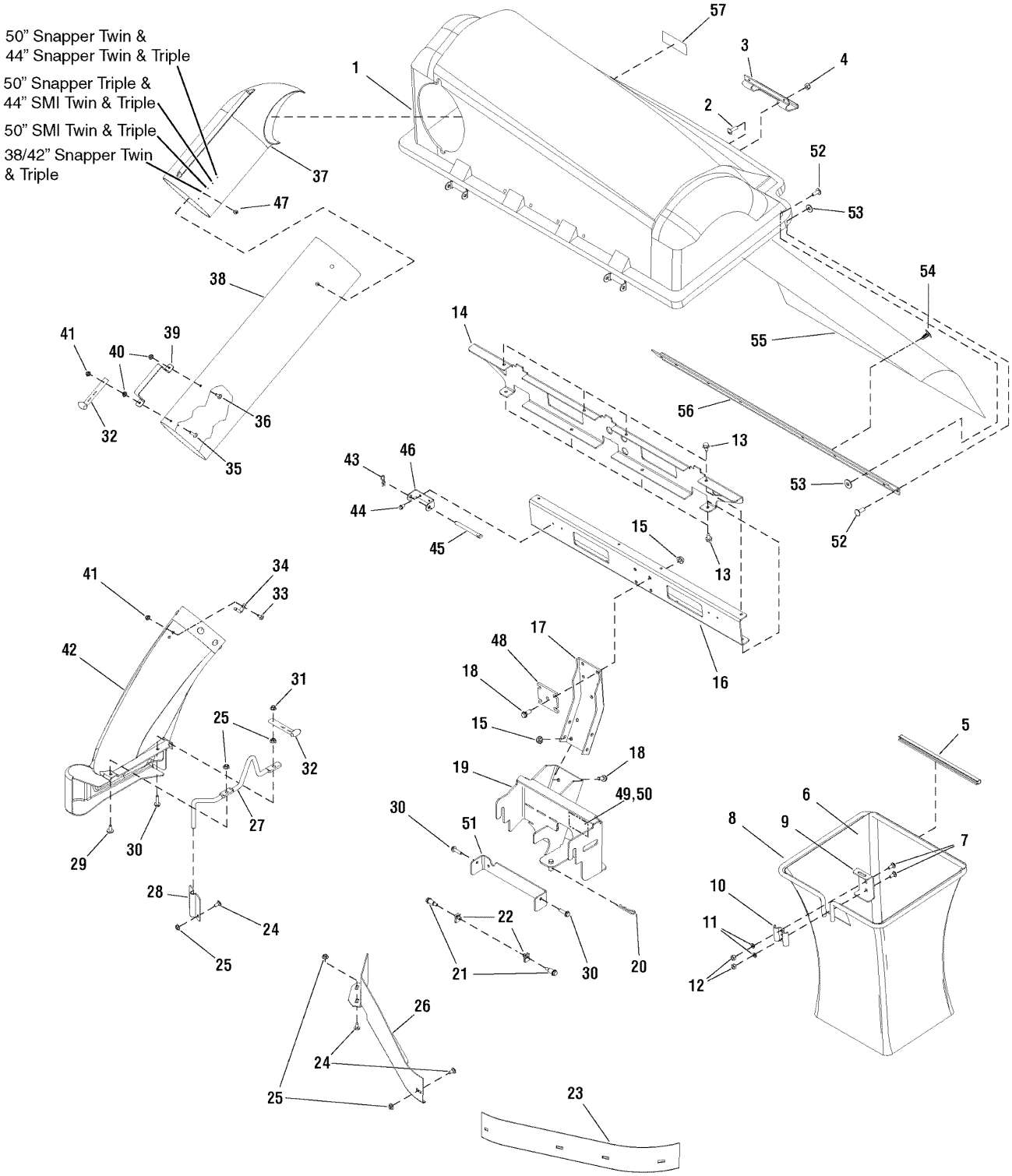

The above parts group applies to the following Mfg. Nos.:

1695169 - Catcher

Copyright © 2007 by Briggs and Stratton Corporation
Milwaukee, WI, USA. All rights reserved

Triple Catcher Assembler

REF NO	PART NO.	QTY.	DESCRIPTION
46	1733504ASM	2	PIVOT, Hinge
47	26x239MA	1	SCREW, 1/4 x 3/4 (Included in Ref. No. 58)
48	1733948ASM	1	PLATE, Reinforcement, Upright (Included in Ref. No. 58)
49	-----	1	STICKER, Serial w/Bar Code (Not Serviceable)
50	-----	1	MYLAR OVERLAY
51	1733903ASM	1	PLATE, Reinforcement Frame
52	1673320SM	18	RIVET, Pop
53	1910531SM	12	WASHER, Rivet
54	1732490SM	5	FASTENER, Panel
55	1732492SM	1	SCREEN, 19-3/4 x 38
56	1732493SM	1	SUPPORT, Screen
57	1732819SM	1	DECAL, Warning Thrown Objects
58	1660954SM	1	HARDWARE BAG (Not Shown. Includes Ref. Nos.15, 18, 20, 21, 22, 24, 25, 28, 30, 43, 45, 47 & 48)
--	1733866	1	INSTRUCTION MANUAL

Footnotes

The above parts group applies to the following Mfg. Nos.:
1695169 - Catcher

Copyright © 2007 by Briggs and Stratton Corporation
Milwaukee, WI, USA. All rights reserved

Hardware Identification & Torque Specifications

Common Hardware Types

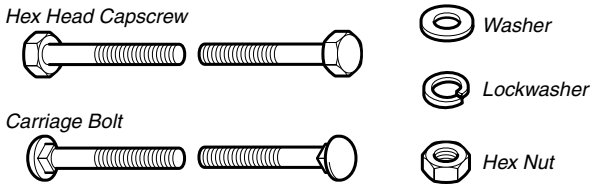

Standard Hardware Sizing

When a washer or nut is identified as **1/2"**, this is the *Nominal size*, meaning the *inside diameter* is 1/2 inch; if a second number is present it represent the *threads per inch*

When bolt or capscrew is identified as **1/2 - 16 x 2"**, this means the *Nominal size*, or *body diameter* is 1/2 inch; the second number represents the *threads per inch* (16 in this example, and the final number is the *body length* of the bolt or screw (in this example 2 inches long).

The guides and ruler furnished below are designed to help you select the appropriate hardware and tools.

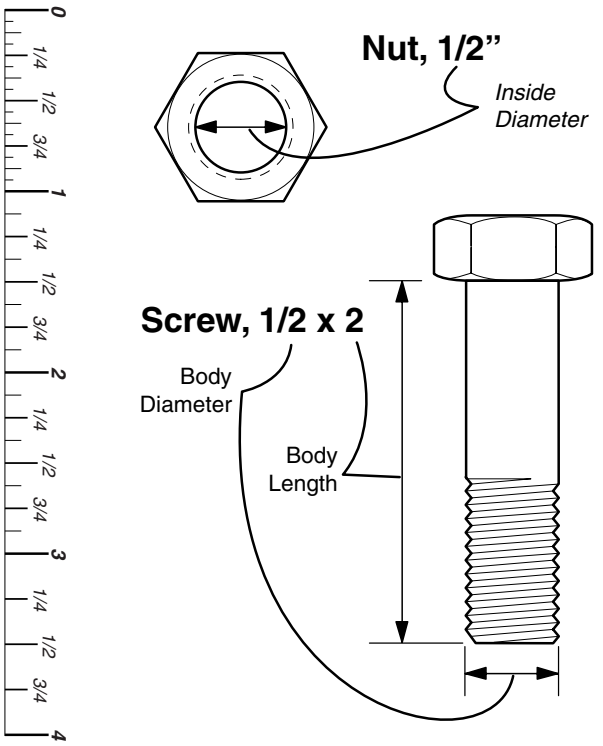

Torque Specification Chart

FOR STANDARD MACHINE HARDWARE (Tolerance ± 20%)

Hardware Grade	No Marks SAE Grade 2		SAE Grade 5		SAE Grade 8	
Size Of Hardware	*in/lbs* **ft/lbs**	Nm.	*in/lbs* **ft/lbs**	Nm.	**in/lbs** **ft/lbs**	Nm.
8-32	*19*	2.1	*30*	3.4	*41*	4.6
8-36	*20*	2.3	*31*	3.5	*43*	4.9
10-24	*27*	3.1	*43*	4.9	*60*	6.8
10-32	*31*	3.5	*49*	5.5	*68*	7.7
1/4-20	*66*	7.6	**8**	10.9	**12**	16.3
1/4-28	*76*	8.6	**10**	13.6	**14**	19.0
5/16-18	**11**	15.0	**17**	23.1	**25**	34.0
5/16-24	**12**	16.3	**19**	25.8	**27**	34.0
3/8-16	**20**	27.2	**30**	40.8	**45**	61.2
3/8-24	**23**	31.3	**35**	47.6	**50**	68.0
7/16-14	**30**	40.8	**50**	68.0	**70**	95.2
7/16-20	**35**	47.6	**55**	74.8	**80**	108.8
1/2-13	**50**	68.0	**75**	102.0	**110**	149.6
1/2-20	**55**	74.8	**90**	122.4	**120**	163.2
9/16-12	**65**	88.4	**110**	149.6	**150**	204.0
9/16-18	**75**	102.0	**120**	163.2	**170**	231.2
5/8-11	**90**	122.4	**150**	204.0	**220**	299.2
5/8-18	**100**	136	**180**	244.8	**240**	326.4
3/4-10	**160**	217.6	**260**	353.6	**386**	525.0
3/4-16	**180**	244.8	**300**	408.0	**420**	571.2
7/8-9	**140**	190.4	**400**	544.0	**600**	816.0
7/8-14	**155**	210.8	**440**	598.4	**660**	897.6
1-8	**220**	299.2	**580**	788.8	**900**	1,244.0
1-12	**240**	326.4	**640**	870.4	**1,000**	1,360.0

NOTES

1. These torque values are to be used for all hardware excluding: locknuts, self-tapping screws, thread forming screws, sheet metal screws and socket head setscrews.
2. Recommended seating torque values for locknuts:
   a. for prevailing torque locknuts - use 65% of grade 5 torques.
   b. for flange whizlock nuts and screws - use 135% of grade 5 torques.
3. Unless otherwise noted on assembly drawings, all torque values must meet this specification.

Wrench & Fastener Size Guide

1/4" Bolt or Nut
Wrench—7/16"

5/16" Bolt or Nut
Wrench—1/2"

3/8" Bolt or Nut
Wrench—9/16"

7/16" Bolt or Nut
Wrench (Bolt)—5/8"
Wrench (Nut)—11/16"

1/2" Bolt or Nut
Wrench—3/4"