American Standard
Style That Works Better

PENLYN™ WALL-HUNG LAVATORY
VITREOUS CHINA

PENLYN™ WALL-HUNG LAVATORY

- Wall-hung sink
- Vitreous china
- Front overflow
- Integral back splash
- Faucet ledge
  Shown with 4801.862 Amarilis Heritage faucet with Triune Cross handles (not included)

Faucet holes on 102mm (4") centers:

❑ **0373.027** For wall hanger (included)

❑ **0373.050** For concealed arms support

❑ **0373.950** For concealed arms support
- Less overflow

Nominal Dimensions:
457 x 403mm
(18" x 15-7/8")

Bowl sizes:
340mm (13-3/8") wide
216mm (8-1/2") front to back
127mm (5") deep

Compliance Certifications -
Meets or Exceeds the Following Specifications:
- ASME A112.19.2 for Vitreous China Fixtures

To Be Specified:
❑ Color: ❑ White
❑ Faucet*:
❑ Faucet Finish:
❑ Supplies:
❑ 1-1/4" Trap:
❑ Nipple:
❑ Concealed Arms Support (by others):

* See faucet section for additional models available

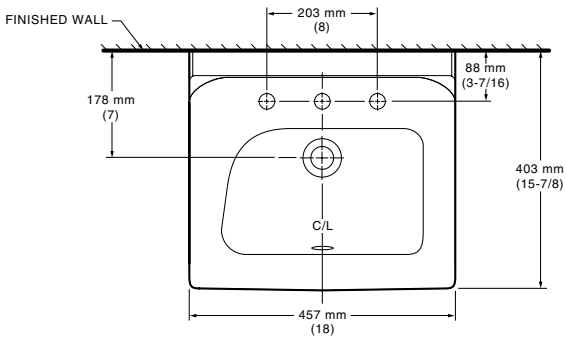

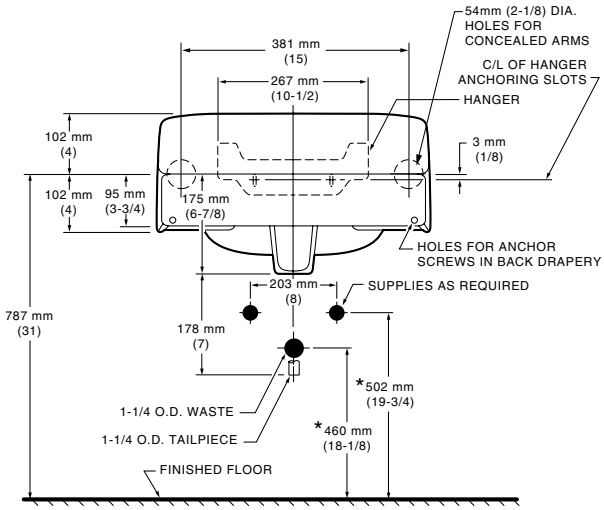

NOTES:
* DIMENSIONS SHOWN FOR LOCATION OF SUPPLIES AND "P" TRAP ARE SUGGESTED.
PROVIDE SUITABLE REINFORCEMENT FOR ALL WALL SUPPORTS.
FITTINGS NOT INCLUDED AND MUST BE ORDERED SEPARATELY.

IMPORTANT: Dimensions of fixtures are nominal and may vary within the range of tolerances established by ANSI Standard A112.19.2. These measurements are subject to change or cancellation. No responsibility is assumed for use of superseded or voided pages.

© 2008 AS America Inc.