TECHNICAL MANUAL FOR

2U GENESYS™ 5kW

Programmable DC Power Supplies

Document: 83-515-000 Rev B

TDK-Lambda Americas Inc.

405 Essex Road, Neptune, NJ 07753

Tel: (732) 922-9300

Fax: (732) 922-9334

Web: www.US.TDK-Lambda.com/HP

TDK-Lambda Americas Inc
405 Essex Road
Neptune NJ 07753 USA
Tel: +1 732 922 9300
Fax: +1 732 922 9334
www.us.tdk-lambda.com/hp

DECLARATION OF CONFORMITY

GEN 5000W Series

We, TDK-Lambda Americas Inc., of 405 Essex Road, Neptune, NJ 07753, USA declare under our sole responsibility that the GEN 5000W series as detailed on the attached products covered sheet comply with the provisions of the following European Directives and are eligible to bear the CE mark:

Low Voltage Directive	2006/95/EC
EMC Directive	2004/108/EC

Assurance of conformance of the described product with the provisions of the stated EC Directive is given through compliance to the following standards:

Electrical Safety	IEC/EN60950-1:2001, First Edition UL60950-1:2007, Second Edition
Electromagnetic Emissions:	EN 55022: 1998 + A1::2000 + A2:2003 EN 55024: 1998 + A1::2001 + A2:2003 EN 61000-3-3: 1995+ A2:2005

These products are high-power equipment, with input power >1 kW, for professional use and installation, and carry the CE mark accordingly. These products are for use in Class A, ITE environment only, as defined by EN 55022: 1998 + A1::2000 + A2:2003 and EN 61000-3-3: 1995+ A2:2005.

Our European Representative in the EU is TDK-Lambda UK Limited, located at Kingsley Avenue, Ilfracombe, Devon, EX34 8ES UK. Further, all products covered by this declaration are manufactured in accordance with ISO9001:2000 which ensure continued compliance of the products with the requirements of the Low Voltage Directive.

Name of Authorized Signatory	Adam Rawicz-Szczerbo
Signature of Authorized Signatory	
Position of Authorized Signatory	Managing Director, TDK-Lambda EMEA
Date	1st 04 08
Place where signed	Ilfracombe, Devon, England

PRODUCTS COVERED SHEET FOR THE GEN 5000W SERIES

Product Name: GEN 5000W Series Switch Mode DC Power Supply

Models: GEN www-xxx-yyyy-u-zzzzz-u

www= Volts (8V to 600V)
xxx= Current (8.5A to 600A depending on power not to exceed 5100W)
yyy = LAN, MD, IEEE, IEMD, IS420, IS510
zzzzz= 3P208 for 208Vac 3 phase input or 3P400 for 400Vac 3 phase input .
u = optional power cord.

GENESYS™ Manual Supplement

FOR UNITS EQUIPPED WITH “IEMD” OPTION,
ALSO REFER TO MANUAL 83-030-200 IEMD.

FOR UNITS EQUIPPED WITH “LAN” OPTION,
REFER TO MANUAL 83-034-100.

TABLE OF CONTENTS

WARRANTY……. Pg. 1
SAFETY INSTRUCTIONS…….. Pg. 2
GERMAN SAFETY INSTRUCTIONS…… Pg. 4

CHAPTER 1 GENERAL INFORMATION……... Pg. 6
1.1 USER MANUAL CONTENT…… Pg. 6
1.2 INTRODUCTION…… Pg. 6
1.2.1 General description…….. Pg. 6
1.2.2 Models covered ……... Pg. 6
1.2.3 Features and options …….. Pg. 6
1.2.4 Multiple output power system …… Pg. 7
1.2.5 Control via the serial communication port…… Pg. 7
1.2.6 Analog voltage programming and monitoring…… Pg. 7
1.2.7 Parallel operation…… Pg. 7
1.2.8 Output connections…… Pg. 7
1.2.9 Cooling and mechanical construction…….. Pg. 8
1.3 ACCESSORIES…… Pg. 8
1.3.1 General…….. Pg. 8
1.3.2 Serial link cable…… Pg. 8
1.3.3 Misc. hardware…… Pg. 8
1.3.4 AC cables …… Pg. 8

CHAPTER 2 SPECIFICATIONS……... Pg. 9
2.1 OUTPUT RATING…… Pg. 9
2.2 INPUT CHARACTERISTICS……... Pg. 9
2.3 CONSTANT VOLTAGE MODE……... Pg. 9
2.4 CONSTANT CURRENT MODE…….. Pg. 9
2.5 ANALOG PROGRAMMING AND MONITORING…… Pg. 9
2.6 PROGRAMMING AND READBACK…….. Pg. 10
2.7 PROTECTIVE FUNCTIONS…… Pg. 10
2.8 FRONT PANEL…… Pg. 10
2.9 ENVIRONMENTAL CONDITIONS…… Pg. 10
2.10 MECHANICAL…… Pg. 10
2.11 SAFETY/EMC…….. Pg. 10
2.12 SUPPLEMENTAL CHARACTERISTICS…… Pg. 11
2.13 OUTLINE DRAWINGS……... Pg. 12

CHAPTER 3 INSTALLATION…….. Pg. 13
3.1 GENERAL……... Pg. 13
3.2 PREPARATION FOR USE……... Pg. 13
3.3 INITIAL INSPECTION……... Pg. 13
3.4 RACK MOUNTING…… Pg. 13
3.4.1 To install the power supply in a rack…….. Pg. 14
3.4.2 Rack mount slides…… Pg. 14
3.5 LOCATION MOUNTING AND COOLING…… Pg. 14
3.6 AC SOURCE REQUIREMENTS…… Pg. 14
3.7 AC INPUT POWER CONNECTION……... Pg. 15
3.7.1 AC input connector…… Pg. 15
3.7.2 AC input cord…….. Pg. 15
3.7.3 AC input wire connection…….. Pg. 15
3.8 TURN-ON CHECKOUT PROCEDURE…… Pg. 17
3.8.1 General…… Pg. 17
3.8.2 Prior to operation…… Pg. 17
3.8.3 Constant voltage check…….. Pg. 17
3.8.4 Constant current check……... Pg. 17
3.8.5 OVP check……... Pg. 18
3.8.6 UVL check…… Pg. 18
3.8.7 Foldback check……... Pg. 18

TABLE OF CONTENTS

3.8.8 Address setting…….. Pg. 18
3.8.9 Baud rate setting…… Pg. 18
3.9 CONNECTING THE LOAD…….. Pg. 19
3.9.1 Load Wiring…….. Pg. 19
3.9.2 Current Carrying Capacity…… Pg. 19
3.9.3 Wire termination…… Pg. 20
3.9.4 Noise and Impedance Effects……... Pg. 20
3.9.5 Inductive loads…… Pg. 20
3.9.6 Making the load connections…… Pg. 21
3.9.7 Connecting single loads, local sensing (default)…… Pg. 24
3.9.8 Connecting single loads, remote sensing…….. Pg. 24
3.9.9 Connecting multiple loads, radial distribution method……..…….. Pg. 24
3.9.10 Multiple loads connection with distribution terminals…….. Pg. 25
3.9.11 Grounding outputs…… Pg. 25
3.10 LOCAL AND REMOTE SENSING…… Pg. 26
3.10.1 Sensing wiring……... Pg. 26
3.10.2 Local sensing…… Pg. 26
3.10.3 Remote sensing…… Pg. 27
3.10.4 J2 sense connector technical information…… Pg. 27
3.11 REPACKAGING FOR SHIPMENT…… Pg. 27

CHAPTER 4 FRONT AND REAR PANEL CONTROLS AND CONNECTORS……... Pg. 28
4.1 INTRODUCTION…… Pg. 28
4.2 FRONT PANEL CONTROLS AND INDICATORS…… Pg. 28
4.3 REAR PANEL CONNECTIONS AND CONTROLS…….. Pg. 30
4.4 REAR PANEL SW1 SETUP SWITCH…… Pg. 31
4.4.1 SW1 positions functions…… Pg. 32
4.4.2 Resetting the switch…… Pg. 32
4.5 REAR PANEL J1 PROGRAMMING AND MONITORING CONNECTOR…… Pg. 33
4.5.1 Making J1 connections…….. Pg. 33

CHAPTER 5 LOCAL OPERATION…… Pg. 35
5.1 INTRODUCTION…….. Pg. 35
5.2 STANDARD OPERATION…… Pg. 35
5.2.1 Constant Voltage Mode…… Pg. 35
5.2.2 Constant Current Operation…….. Pg. 35
5.2.3 Automatic Crossover…….. Pg. 36
5.3 OVER VOLTAGE PROTECTION (OVP)……... Pg. 36
5.3.1 Setting the OVP level…… Pg. 36
5.3.2 Activated OVP protection indications…….. Pg. 36
5.3.3 Resetting the OVP circuit…….. ……... Pg. 36
5.4 UNDER VOLTAGE LIMIT…….. . Pg. 37
5.4.1 Setting the UVL level…….. Pg. 37
5.5 FOLDBACK PROTECTION…… Pg. 37
5.5.1 Setting the Foldback protection…… Pg. 37
5.5.2 Resetting activated Foldback protection…….. Pg. 37
5.6 OUTPUT ON/OFF CONTROL…… Pg. 37
5.7 OUTPUT SHUT-OFF (SO) CONTROL VIA REAR PANEL J1 CONNECTOR…… Pg. 37
5.8 ENABLE/DISABLE CONTROL VIA…… Pg. 38
5.9 CV/CC SIGNAL…….. Pg. 38
5.10 PS OK SIGNAL…… Pg. 38
5.11 SAFE START AND AUTO-RESTART MODES…….. Pg. 39
5.11.1 Automatic start mode…… Pg. 39
5.11.2 Safe start mode…….. Pg. 39
5.12 OVER TEMPERATURE PROTECTION (OTP)…….. Pg. 39
5.13 LAST SETTING MEMORY…… Pg. 39
5.14 SERIES OPERATION…… Pg. 39
5.14.1 Series connection for increased output voltage…… Pg. 40
5.14.2 Series connection for positive and negative output voltage…… Pg. 41
5.15 PARALLEL OPERATION…… Pg. 42

TABLE OF CONTENTS

5.15.1 Basic parallel operation…….. Pg. 42
5.15.2 Advanced parallel operation…….. Pg. 42
5.16 DAISY-CHAIN SHUT-OFF CONNECTION……. Pg. 45
5.17 FRONT PANEL LOCKING……. Pg. 45
5.17.1 Unlocked front panel……. Pg. 45
5.17.2 Locked front panel……. Pg. 45

CHAPTER 6 REMOTE ANALOG PROGRAMMING…… Pg. 46
6.1 INTRODUCTION……. Pg. 46
6.2 LOCAL/REMOTE ANALOG CONTROL……. Pg. 46
6.3 LOCAL/REMOTE ANALOG INDICATION……. Pg. 46
6.4 REMOTE VOLTAGE PROGRAMMING OF OUTPUT VOLTAGE AND CURRENT…….. Pg. 47
6.5 RESISTIVE PROGRAMMING OF OUTPUT VOLTAGE AND CURRENT…….. Pg. 48
6.6 REMOTE MONITORING OF OUTPUT VOLTAGE AND CURRENT……... Pg. 49

CHAPTER 7 RS232 & RS485 REMOTE CONTROL……... Pg. 50
7.1 INTRODUCTION……. Pg. 50
7.2 CONFIGURATION……. Pg. 50
7.2.1 Default setting……... Pg. 50
7.2.2 Address setting……. Pg. 50
7.2.3 RS232 or RS485 selection……. Pg. 50
7.2.4 Baud rate setting…….. Pg. 50
7.2.5 Setting the unit into Remote or Local mode……. Pg. 50
7.2.6 RS232/458 port at Local mode…….. Pg. 51
7.2.7 Front panel in Remote mode……. Pg. 51
7.3 REAR PANEL RS232/485 CONNECTOR……. Pg. 51
7.4 MD MODE OPTION (Factory Installed)……. Pg. 52
7.4.1 MD Mode Description……. Pg. 52
7.4.2 MD Mode enable - Serial communication mode……. Pg. 52
7.4.3 MD Mode SRQ……. Pg. 52
7.4.4 Communication Collisions……. Pg. 52
7.4.5 MD Mode SRQ Retransmission……. Pg. 52
7.5 CONNECTING POWER SUPPLIES TO RS232 OR RS485 BUS……. Pg. 53
7.5.1 Single power supply……. Pg. 53
7.5.2 Multi power supply connection to RS232 or RS485 BUS…….. Pg. 54
7.6 COMMUNICATION INTERFACE PROTOCOL……. Pg. 54
7.6.1 Data format……... Pg. 54
7.6.2 Addressing……. Pg. 54
7.6.3 End of message…….. Pg. 54
7.6.4 Command repeat……. Pg. 54
7.6.5 Checksum……. Pg. 54
7.6.6 Acknowledge……. Pg. 54
7.6.7 Error message…….. Pg. 55
7.6.8 Backspace……. Pg. 55
7.7 ERROR MESSAGES……. Pg. 55
7.8 COMMAND SET DESCRIPTION……. Pg. 55
7.8.1 General guides……. Pg. 55
7.8.2 Command set categories……. Pg. 55
7.8.3 Initialization control commands…….. Pg. 56
7.8.4 ID control commands…….. Pg. 56
7.8.5 Output control commands…….. Pg. 56
7.9 GLOBAL OUTPUT COMMANDS……. Pg. 58
7.9.1 General……. Pg. 58
7.10 SINGLE BYTE COMMANDS……. Pg. 59
7.10.1 General…….. Pg. 59
7.10.2 Global commands without response……. Pg. 59
7.10.3 Global commands with response…….. Pg. 60
7.10.4 Addressed commands with response…….. Pg. 60
7.10.5 Addressed commands without response……. Pg 61

TABLE OF CONTENTS

7.10.6 Status Control Commands……... Pg. 63
7.11 STATUS, ERROR AND SRQ REGISTERS……. Pg. 63
7.11.1 General Description……. Pg. 63
7.11.2 Conditional registers……. Pg. 64
7.11.3 Service Request Enabled and Event Registers…….. Pg. 65
7.12 SERIAL COMMUNICATION TEST SET-UP……. Pg. 68

CHAPTER 8 ISOLATED ANALOG PROGAMMING OPTION……. Pg. 69
8.1 INTRODUCTION……. Pg. 69
8.2 SPECIFICATIONS……. Pg. 69
8.2.1 0-5V/0-10V option……... Pg. 69
8.2.2 4-20mA option…….. Pg. 69
8.3 ISOLATED PROGRAMMING & MONITORING CONNECTOR……. Pg. 70
8.4 SETUP AND OPERATING INSTRUCTIONS……. Pg. 71
8.4.1 Setting up the power supply for 0-5/0-10V Isolated Programming and Monitoring…… Pg. 71
8.4.2 Setting up the power supply for 4-20mA Isolated Programming and Monitoring…….. Pg. 71

9.1 INTRODUCTION……. Pg. 72
9.2 UNITS UNDER WARRANTY……... Pg. 72
9.3 PERIODIC MAINTENANCE……. Pg. 72
9.4 ADJUSTMENT AND CALIBRATION…….. Pg. 72
9.5 PARTS REPLACEMENT AND REPAIRS…….. Pg. 72
9.6 TROUBLESHOOTING…….. Pg. 72
9.7 FUSE RATING……... Pg. 73

WARRANTY

This TDK-Lambda Americas Inc. product is warranted against defects in materials and workmanship for a period of five years from date of shipment. During the warranty period, TDK-Lambda Americas Inc. will, at it's option, either repair or replace products which prove to be defective.

LIMITATION OF WARRANTY

The warranty shall not apply to defects resulting from improper or inadequate usage or maintenance by the buyer, buyer supplied products or interfacing. The warranty shall not apply to defects resulting from unauthorized modifications, or from operation exceeding the environmental specifications of the product, or if the QA seal has been removed or altered by anyone other than TDK-Lambda Americas Inc. authorized personnel. TDK-Lambda Americas Inc. does not warrant the buyer's circuitry or malfunctions of TDK-Lambda Americas Inc. products resulting from the buyer's circuitry. Furthermore, TDK-Lambda Americas Inc. does not warrant any damage occurring as a result of the buyer's circuitry or the buyer's - supplied products. THIS LIMITED WARRANTY IS IN LIEU OF, AND TDK-LAMBDA AMERICAS INC DISCLAIMS AND EXCLUDES, ALL OTHER WARRANTIES, STATUTORY, EXPRESS OR IMPLIED, INCLUDING, WITHOUT LIMITATION, ANY WARRANTY OF MERCHANTABILITY OR FITNESS FOR A PARTICULAR PURPOSE, OR OF CONFORMITY TO MODELS OR SAMPLES.

WARRANTY SERVICE

This product must be returned to an authorized TDK-Lambda Americas Inc. service facility for repairs or other warranty service. For products returned to TDK-Lambda Americas Inc. for warranty service, the buyer shall prepay shipping charges to TDK-Lambda Americas Inc. If the unit is covered under the foregoing warranty then TDK-Lambda Americas Inc. shall pay the shipping charges to return the product to the buyer. Refer to Section 3.11 for repackaging for shipment.

DISCLAIMER

The information contained in this document is subject to change without notice. TDK-Lambda Americas Inc. shall not be liable for errors contained in this document or for incidental or consequential damages in connection with the furnishing, performance or use of this material. No part of this document may be photocopied, reproduced or translated into another language without the prior written consent of TDK-Lambda Americas Inc.

TRADEMARK INFORMATION

Genesys™ power supply is a trademark of TDK-Lambda Americas Inc.
Microsoft™ and Windows™ are trademarks of Microsoft Corporation.

THE FCC WANTS YOU TO KNOW

This equipment has been tested and found to comply with the limits for a Class A digital device, pursuant to Part 15 of the FCC rules. These limits are designed to provide reasonable protection against harmful interference when the equipment is operated in a commercial environment.

This equipment generates, uses and can radiate radio frequency energy and, if not installed and used in accordance with the instructions, may cause harmful interference to radio communications.

Operation of this equipment in a residential area is likely to cause harmful interference, in which case the user will be required to correct the interference at his own expense.

FCC WARNING

Modifications not expressly approved by manufacturer could void the user authority to operate the equipment under FCC Rules.

SAFETY INSTRUCTIONS

CAUTION

The following safety precautions must be observed during all phases of operation, service and repair of this equipment. Failure to comply with the safety precautions or warnings in this document violates safety standards of design, manufacture and intended use of this equipment and may impair the built-in protections within.
TDK-Lambda Americas Inc. shall not be liable for user's failure to comply with these requirements.

INSTALLATION CATEGORY

The Genesys™ power supply series has been evaluated to INSTALLATION CATEGORY II. Installation category (over voltage category) II: local level, appliances, portable equipment etc. With smaller transient over voltage than Installation Category (over voltage category) III.

GROUNDING

This product is a Safety Class 1 instrument. To minimize shock hazard, the instrument chassis must be connected to an electrical ground (Safety ground). The instrument must be connected to the AC power supply mains through a three conductor power cable, with the ground wire firmly connected to an electrical ground (safety ground) at the power outlet.

For instruments designed to be hard-wired to the supply mains, the protective earth terminal must be connected to the safety electrical ground before another connection is made. Any interruption of the protective ground conductor, or disconnection of the protective earth terminal will cause a potential shock hazard that might cause personal injury.

WARNING

OUTPUT TERMINALS GROUNDING

There is a potential shock hazard at the RS232/RS485 and the IEEE ports when using power supplies with rated or combined voltage greater than 400V and the Positive Output of the Power Supply is grounded. Do Not connect the Positive Output to ground when using the RS232/RS485 or IEEE.

FUSES

Fuses must be changed by authorized TDK-Lambda Americas Inc. service personnel only. For continued protection against risk of fire, replace only with the same type and rating of fuse. Refer to Chapter 9 for fuse ratings.

INPUT RATINGS

Do not use AC supply, which exceeds the input voltage and frequency rating of this instrument. The input voltage and frequency rating of the Genesys™ power supply series is: 190-240V, 50/60Hz for three phase 200V models and 380-415, 50/60 Hz for three phase 400V models. For safety reasons, the mains supply voltage fluctuations should not exceed +/-10% of nominal voltage.

LIVE CIRCUITS

Operating personnel must not remove the instrument cover. No internal adjustment or component replacement is allowed by TDK-Lambda Americas Inc. qualified personnel. Never replace components with power cable connected. To avoid injuries, always disconnect power, discharge circuits and remove external voltage source before touching components.

PARTS SUBSTITUTIONS & MODIFICATIONS

Parts substitutions and modifications are allowed by authorized TDK-Lambda Americas Inc. service personnel only. For repairs or modifications, the instrument must be returned to an authorized TDK-Lambda Americas Inc. service facility.

SAFETY INSTRUCTIONS

ENVIRONMENTAL CONDITIONS

The Genesys™ power supply series safety approval applies to the following operating conditions:

*Indoor use
*Maximum relative humidity: 90% (no condensation)
*Pollution degree 2
*Ambient temperature: 0°C to 50°C
*Altitude: up to 3000m

CAUTION Do not use this product in environments with strong Electromagnetic field, corrosive gas and conductive materials.

CAUTION Risk of Electrical Shock

Instruction manual symbol. The instrument will be marked with this symbol when it is necessary for the user to refer to the instruction manual.

Indicates hazardous voltage.

Indicates ground terminal.

Protective Ground Conductor Terminal

Off (Supply)

On (Supply)

Direct Current (DC)

Alternating Current (AC)

3~ Three-Phase Alternating Current

Standby (Supply)

WARNING The WARNING sign denotes a hazard. An attention to a procedure is called. Not following procedure correctly could result in personal injury. A WARNING sign should not be skipped and all indicated conditions must be fully understood and met.

CAUTION The CAUTION sign denotes a hazard. An attention to a procedure is called. Not following the procedure correctly could result in damage to the equipment. Do not proceed beyond a CAUTION sign until all indicated conditions are fully understood and met.

FCC COMPLIANCE NOTICE:
Note: This equipment has been tested and found to comply with the limits for a Class A digital device, pursuant to part 15 of the FCC Rules. These limits are designed to provide reasonable protection against harmful interference when the equipment is operated in a commercial environment. This equipment generates electro-magnetic fields, and can radiate radio frequency energy and, if not installed and used in accordance with the instruction manual, may cause harmful interference to radio communications. Operation of this equipment in a residential area is likely to cause harmful interference in which case the user will be required to correct the interference at his own expense.

SICHERHEITS-INSTALLATIONS ANWEISUNGEN

Vorsicht

Vor Anschluss an das Netz ist die Aufstellanleitung wie nachstehend beschrieben zu beachten. Die nachstehenden Sicherheitsanweisugen mussen während aller Phasen des Betriebes, des Services und der Reparatur dieser Ausrustung beachtet werden. Alle notwendigen Bedingungen die sicherstellen, dass die Einrichtung zu keiner Gefahr im Sinne dieser Norm führen kann, sind in diesem Handbuch beschrieben.

TDK-Lambda Americas Inc. ist nich verantwortlich fur Fehler, die bei der Inbetriebnahme des Gerates auf Grundlage dieser Sicherheitsanweisungen durch den Betreiber entstehen können.

Betriebsbedingungen

Die Genesys™ Stromversorgungs-Reihe ist zur installation gemass Uberspannungs-Kategorie 2 entwickelt worden.

Installatios Kategorie (Uberspannungs-Kategories) 2 bedeutet: Kleinindustrie, Geräte, bewegliche Ausrustung etc.. mit Uberspannungen kleiner als Installation Kategorie 3.

Erdungskonzept

Dieses Produkt ist ein Gerat mit Schutzklasse1. Damit gefahrliche Energieinhalte und Spannungen vermieden werden, ist das Geratechassis an eine Schutzerde anzuschliessen. Das Gerat muss an die AC-Wechselspannungsversorgung mit 3 Leitern (L, N, PE) angeschlossen werden. Der PE-Anschluss ist an einen festen Erder anzuschliessen. Bei Festverdrahtung des Gerates ist sicherzustellen, dass der PE Anschluss als erstes durchgefuhrt wird.

Jede mogliche Unterbrechung des PE-Leiters oder Trennung der PE Masses kann einen moglichen elektrischen Schlag hervorrufen, der Personenschaden zur Folge hatte.

Vorsicht

Erdung des DC-Ausgangs

Es besteht Energiegefahr am RS232/RS485 und IEEE Anschluss, falls die Ausgangsspannung des Gerates grosser ist als 400V und der positive Ausgangsanschluss des Netzteiles geerdet wird. Dies gilt insbesondere auch bei Reihenschaltungen von unterschiedlichen Netzteilen. Wird die RS232/485 oder IEEE Schnittstelle verwendet, ist darauf zu achten, dass der Plus-Ausgangsanschluss nicht geerdet wird.

Absicherung

Sicherungen durfen nur durch autorisierte TDK-Lambda Americas Inc. Service Personen ausgetauscht werden. Um Brandgefahr vorzubeugen, sind nur Sicherungen zu verwenden mit gleicher Bauart und Auslosecharakteristik. Siehe hierzu Wartungsanweisungen in Kapitel 6 bezuglich Sicherungen.

Anschluss an Versorgungsstromkreis

Der Betrieb des Gerates ist nur fur den dafur spezifizierten Wechselspannungsbereich und der angegebenen Frequenz erlaubt.

Der Nominaleingangsspannungsbereich der Genesys™ Serie liegt bei 100-240VAC mit 50/60Hz. Fur einen sicheren Betrieb des Gerates ist eine Abweichung von max. +/-10% der Nominalspannung erlaubt.

Spannungsfuhrende Teile

Die Gerateabdeckung darf nur im stromlosen Zustand geoffnet werden. Interne Modifikationen, sowie Bauteileaustausch ist nur durch TDK-Lambda Americas Inc. qualifiziertes Personal erlaubt. Vor Austausch von Bauteilen ist das Netzkabel bzw. Die Versorgungsspannung zu trennen.

Energieversorgungsanschlusse sind immer zu trennen um Personenverletzungen durch gefahrliche Energieinhalte und Spannungen auszuschliessen. Die Stromkreise sind zu entladen, extreme Spannunsquellen sind zu entfernen bevor Bauteile bzw. Komponenten getauscht werden.

Anderungen and Bauteileersatz
Ersatzteilaustausch – und Anderungen durfen nur von autorisiertem TDK-Lambda Americas Inc. SERVICE-PERSONEN durchgefuhrt werden. Fur Reparaturen oder Anderungen ist das Gerat zur TDK-Lambda Americas Inc. Service-Niederlassung zu retournieren.

SICHERHEITS-HINWEISE

Umweltbedingungen

Die Genesys™ Stromversorgungs-Serie ist gemassden Sicherheitsabnahmen fur folgende Betriebsbedingungen zugelassen.
*Stationare Einrichtungen in Gebauden.
*Umgebungstemperaturebereich: 0-50°C.
*Maximale Relative Luftfeuchtigkeit: 90% (nicht kondensierend).
*Betriebshohe: bis zu 3000m.
*Verschmutzungsgrad 2.

Sicherheits-und Warnsymbole

VORSICHT Spannungsfuhrende Teile-Gefahr durch elektrischen Schlag bzw. Energieinhalte

Handbuch-Symbol. Das Gerat bzw. Gerateteile werden mit diesem Symbol gekennzeichnet, wenn es fur den Benutzer notwendig ist, sich auf die Anweisungen im Handbuch zu beziehen.

Zeigt "spannungsfuhrende Teile“ mit gefahrlicher Spannung an.

Zeigt Masse-Anschluss an, keine Schutzerde. (z.B. Masseanschlussan einenVerbraucher).

Schutzleiter-Anschlussklemme.

Symbol fur Schalter oder Drucknopfe - Zeigt die

Symbol fur Schalter oder Drucknopfe - Zeigt die

Gleichspannung (DC)

Wechselspannung (AC)

3-phasen Wechselspannung

Symbol fur Bereitschaft (Standby)

WARNING Dieses Warnaufschrift weist auf eine Gefahr hin, die eine Uberprufunganweisung nach sich ziecht. Nichteinhaltung kann zu Personenschaden fuhren. Dieser Warnhinweis darf nicht ubersprungen werden und die beschriebene Vorgehensweise musstrikt verstanden werden und dementsprechend umgesetzt werden.

CAUTION Diese „Vorsichtswarnung“ weist auf eine Gefahr hin, die einer Vorkehrung bedarf. Nichteinhaltung kann zur Zerstorung der Anlage oder des Gerates fuhren. Bitte berucksichtigen Sie alle Anweisungen, die dort beschreiben sind, bevor Sie mit Benutzung der Anlage bzw. des Gerates fortfahren.

CHAPTER 1 GENERAL INFORMATION

1.1 USER MANUAL CONTENT

This User's Manual contains the operating instructions, installation instructions and specifications of the Genesys™ 5000W power supply series. The instructions refer to the standard power supplies, including the built-in RS232/RS485 serial communication. For information related to operation with the optional IEEE programming, refer to User Manual for Power Supply IEEE Programming Interface.

1.2 INTRODUCTION

1.2.1 General Description

Genesys™ power supplies are wide output range, high performance switching power supplies. The Genesys™ series is power factor corrected and operates from AC voltage range of 190-240VAC three phase for 200V models and 380-415VAC three phase for 400VAC models. Output Voltage and Current are continuously displayed and LED indicators show the complete operating status of the power supply. The Front panel controls allow the user to set the output parameters, the protections levels (Over-Voltage protection, Under-Voltage limit and Foldback) and preview the settings. The rear panel includes the necessary connectors to control and monitor the power supply operation by remote analog signals or by the built-in serial communication (RS232/RS485).GPIB programming, LXI certified LAN and Isolated-Analog programming/monitoring are optional.

1.2.2 Models covered by this Manual

Models with rated output from 0-8VDC/0-600A to 0-600VDC/0-8.5A.

Model	Voltage range (V)	Current range (A)
GEN 8 – 600	0 - 8	0 - 600
GEN 10 - 500	0 - 10	0 - 500
GEN 16 - 310	0 - 16	0 - 310
GEN 20 - 250	0 - 20	0 - 250
GEN 30 - 170	0 - 30	0 - 170
GEN 40 - 125	0 - 40	0 - 125
GEN 60 - 85	0 - 60	0 - 85
GEN 80 - 65	0 - 80	0 - 65
GEN 100 - 50	0 - 100	0 - 50
GEN 150 - 34	0 - 150	0 - 34
GEN 300 - 17	0 - 300	0 - 17
GEN 600 - 8.5	0 - 600	0 - 8.5

1.2.3 Features and options

* Constant Voltage / Constant Current with automatic crossover.
* Active power factor correction.
* Embedded Microprocessor Controller.
* Built-in RS232/485 Interface.
* Voltage & Current high resolution adjustment by digital encoders.
* High accuracy programming/readback-16 bit.
* Software Calibration (no internal trimmers / potentiometers).
* Last Setting Memory.
* Independent Remote ON/OFF (opto-isolated) and remote Enable/Disable.
* Parallel operation (Master/Slave) with Active current sharing.
* Remote sensing to compensate for voltage drop of power leads.
* External Analog Programming and Monitoring standard (0-5V or 0-10V, user selectable).

* Cooling fan speed control for low noise and extended fan life.
* Zero stacking-no ventilation holes at the top and bottom surface of the power supply.
* Optional GPIB interface (SCPI compatible).
* Optional Isolated Analog programming/monitoring (0-5V or 0-10V, user selectable and 4-20mA).

1.2.4 Multiple output power system

The Genesys™ power supplies series can be configured into a programmable power system of up to 31 units using the built-in RS232/RS485 communication port and the RS485 linking cable provided with each power supply.

In a GPIB system, each power supply can be controlled using the optional GPIB controller (factory installed).

1.2.5 Control via the serial communication port

The following parameters can be programmed / monitored via the serial communication port:

1. Output Voltage setting.
2. Output Current setting.
3. Output Voltage measurement.
4. Output On/Off control.
5. Output Current measurement.
6. Foldback protection setting
7. Over-voltage protection setting and readback.
8. Under-Voltage limit setting and readback.
9. Power-supply start up mode (last setting or safe mode).

1.2.6 Analog voltage programming and monitoring

Analog inputs and outputs are provided at the rear panel for analog control of the power supply. The Output Voltage and the Current can be programmed by analog voltage or by resistor, and can be monitored by analog voltage. The power supply output can be remotely set to On or Off and analog signals monitor the proper operation of the power supply and the mode of operation (CV/CC).

1.2.7 Parallel operation

Genesys™ power supplies of the same Output Voltage and Current rating can be paralleled in a master-slave configuration with automatic current sharing to increase power available.

1.2.8 Output connections

Output connections are made to rear panel bus-bars for models up to 100V and to a 4-terminal wire clamp connector for models above 100V rated output voltage. Either the positive or negative terminal may be grounded or the output may be floated. Models up to 60VDC Rated Output shall not float outputs more than +/- 60VDC above/below chassis ground. Models >60VDC Rated Output shall not float outputs more than +/-600VDC above/below chassis ground. Contact factory for assistance with higher float voltage applications.

Local or remote sense may be used. In remote sense, the voltage drop on the load wires should be minimized. Refer to the specifications for the maximum voltage drop value.

1.2.9 Cooling and mechanical construction

The Genesys™ series is cooled by internal fans. At the installation, care must be taken to allow free airflow into the power supply via the front panel and out of the power supply via the rear panel. The Genesys™ power supplies have a compact and lightweight package, which allows easy installation and space saving in the application equipment.

CAUTION

Observe all torque guidelines within this manual. Over-torquing may damage Unit or accessories. Such damage is not covered under manufacturers warranty.

1.3 ACCESSORIES

1.3.1 General

Accessories are delivered with the power supply or separately upon ordering. The list below shows the possible accessories and ordering numbers.

1.3.2 Serial Link Cable

Serial link cable, for linking power supplies by RS485 communication is provided with the power supply.

Cable description: 0.5m length, shielded, RJ-45 type plugs, 8 contacts (P/N:GEN/RJ-45).

1.3.3 Misc. hardware

* DB25 plug (AMP, 749809-9).
* Strain relief for AC cord.
* Output terminal shield
* Output bus bar connection hardware.

1.3.4 AC cables

AC cables are not provided with the power supply.

Refer to Table 1-1 for recommended AC input cables (customer supplied). Add a non-locking plug approved by the national safety standards of the county of usage.

AC Input Range	AC Input Cable
190-240V~, Three Phase	4 x 12AWG (3 wire plus safety ground), stranded copper, 300V, 60°C minimum, rated for 25A. 3m max. length, outer diameter: 9~11mm.
380-415V~, Three Phase	4 x 14AWG (3 wire plus safety ground), stranded copper, 600V, 60°C minimum, rated for 15A. 3m max. length, outer diameter: 9~11mm.

Table 1-1: Recommended AC input cable

CHAPTER 2 SPECIFICATIONS

2.1 OUTPUT RATING

MODEL	GEN	8-600	10-500	16-310	20-250	30-170	40-125	60-85	80-65	100-50	150-34	300-17	600-8.5
1.Rated output voltage(1*)	V	8	10	16	20	30	40	60	80	100	150	300	600
2.Rated output current (*2)	A	600	500	310	250	170	125	85	65	50	34	17	8.5
3.Rated output power	W	4800	5000	4960	5000	5100	5000	5100	5200	5000	5100	5100	5100

2.2 INPUT CHARACTERISTICS

		V	8	10	16	20	30	40	60	80	100	150	300	600
1.Input voltage/freq. (*3)		---	3-Phase, 200V models: 170~265Vac, 47~63Hz											
			3-Phase, 400V models: 342~460Vac, 47~63Hz											
2.Maximum Input current at 100% load	3-Phase, 200V models:	A	21	22	22	22	22	22	22	22	22	22	22	22
	3-Phase, 400V models:		10.5	11	11	11	11	11	11	11	11	11	11	11
3.Power Factor (Typ)		---	0.94 @200/380Vac, rated output power.											
4.Efficiency (*4)		%	83	84	84	86	86	88	90	88	88	88	88	88
5.Inrush current (*5)		---	3-Phase 200V models: Less than 50A											
			3-Phase 400V models: Less than 20A											

2.3 CONSTANT VOLTAGE MODE

		V	8	10	16	20	30	40	60	80	100	150	300	600
1.Max. Line regulation (*6)		---	0.01% of rated output voltage											
2.Max. Load regulation (*7)		---	0.015% of rated output voltage +5mV											
3.Ripple and noise (p-p , 20MHz) (*8)		mV	75	75	75	75	75	75	75	85	100	120	300	500
4.Ripple r.m.s., 5Hz~1MHz		mV	10	10	10	10	10	10	10	12	15	25	35	120
5.Temperature coefficient		PPM/°C	100PPM/°C from rated output voltage, following 30 minutes warm-up.											
6.Temperature stability		---	0.05% of rated Vout over 8 hrs interval following 30 minutes warm-up. Constant line, load & temp.											
7.Warm-up drift		---	Less than 0.05% of rated output voltage +2mV over 30 minutes following power on.											
8.Remote sense compensation/wire		V	2	2	2	2	5	5	5	5	5	5	5	5
9.Up-prog. response time, 0~Vomax.(*9)		mS	30						50					100
10.Down-prog. response time	Full load(*9)	mS	15	50			80			100				200
	No load(*10)		400	500	600	700	800	900	1000	1200	1500	2000	2500	3000
11.Transient response time		mS	Time for output voltage to recover within 0.5% of its rated output for a load change 10~90% of rated output current. Output set-point: 10~100%, Local sense. Less than 1mS, for models up to and including 100V. 2mS, for models above 100V.											
12.Hold-up time (Typ)		mS	5mSec Typical. Rated output power.											

2.4 CONSTANT CURRENT MODE

	V	8	10	16	20	30	40	60	80	100	150	300	600
1.Max. Line regulation (*6)	---	0.01% of rated output current											
2.Max. Load regulation (*11)	---	0.02% of rated output current											
3.Load regulation thermal drift	---	Less than 0.1% of rated output current over 30 minutes following load change.											
4.Ripple r.m.s. 5Hz~1MHz (*12)	mA	1950	1800	1400	1000	460	300	150	120	100	90	30	15
5.Temperature coefficient	PPM/°C	100PPM/°C from rated output current, following 30 minutes warm-up.											
6.Temperature stability	---	0.05% of rated Iout over 8hrs interval following 30 minutes warm-up. Constant line, load & temperature.											
7.Warm-up drift	---	8~16V model: Less than +/-0.5% of rated output current over 30 minutes following power on.											
		20V~600V model: Less than +/-0.25% of rated output current over 30 minutes following power on.											

2.5 ANALOG PROGRAMMING AND MONITORING

1.Vout voltage programming	---	0~100%, 0~5V or 0~10V, user selectable. Accuracy and linearity: +/-0.5% of rated Vout.
2.Iout voltage programming (*13)	---	0~100%, 0~5V or 0~10V, user selectable. Accuracy and linearity: +/-1% of rated Iout.
3.Vout resistor programming	---	0~100%, 0~5/10Kohm full scale, user selectable. Accuracy and linearity: +/-1% of rated Vout.
4.Iout resistor programming (*13)	---	0~100%, 0~5/10Kohm full scale, user selectable. Accuracy and linearity: +/-1.5% of rated Iout.
5.On/off control	---	By electrical Voltage: 0~0.6V/2~15V or dry contact, user selectable logic.
6.Output current monitor (*13)	---	0~5V or 0~10V, user selectable. Accuracy: +/-1%.
7.Output voltage monitor	---	0~5V or 0~10V, user selectable. Accuracy : +/-1%.
8.Power supply OK signal	---	4~5V-OK, 0V-Fail. 500ohm series resistance.
9.Parallel operation	---	Possible , up to 4 units in master/slave mode with two wires current balance connection.
10.Series operation	---	Possible (with external diodes), up to 2 units. 600Vdc max.from chassis ground.
11.CV/CC indicator	---	Open collector. CC mode: On, CV mode: Off. Maximum voltage : 30V, maximum sink current: 10mA
12.Enable/Disable	---	Dry contact. Open: Off, Short: On. Max. voltage at Enable/Disable in: 6V.
13.Local/Remote analog control	---	By electrical signal or Open/Short: 0~0.6V or short: Remote, 2~15V or open: Local.
14.Local/Remote analog indicator	---	Open collector. Local: Open, Remote: On. Maximum voltage: 30V, maximum sink current: 10mA.

2.6 PROGRAMMING AND READBACK (RS232/485, Optional LAN/IEEE Interface)

1.Vout programming accuracy	---	0.1% of rated output voltage
2.Iout programming accuracy (*13)	---	0.1% of actual output current +0.3% of rated output current
3.Vout programming resolution	---	0.012% of full scale
4.Iout programming resolution	---	0.012% of full scale
5.Vout readback accuracy	---	0.15% of rated output voltage
6.Iout readback accuracy (*13)	---	0.4% of rated output current
7.Vout readback resolution	---	0.012% of full scale
8.Iout readback resolution	---	0.012% of full scale

2.7 PROTECTIVE FUNCTIONS

	V	8	10	16	20	30	40	60	80	100	150	300	600
1.Foldback protection	---	Output shut-down when power supply change from CV to CC User presetable.											
2.Over-voltage protection (OVP)	---	Inverter shut-down, manual reset by AC input recycle or by OUT button or by communication port command.											
3.Over-voltage trip point	V	0.5~10	0.5~12	1~19	1~24	2~36	2~44	5~66	5~88	5~110	5~165	5~331	5~661
4.Output under voltage limit (UVL)	---	Preset by front panel or communication port. Prevents from adjusting Vout below limit.											
5.Over temperature protection	---	User selectable, latched or non latched.											

2.8 FRONT PANEL

1.Control functions	---	Vout/Iout manual adjust by separate encoders (coarse and fine adjustment).
	---	OVP/UVL manual adjust by Vout. Adjust encoder.
	---	Address selection by Voltage Adjust encoder. No of addresses:31.
	---	Go to local control.
	---	Output on/off
	---	AC on/off
	---	Front panel Lock
	---	Foldback control
	---	Baud rate selection: 1200, 2400, 4800, 9600 and 19200.
	---	Re-start modes (automatic restart, safe mode).
2.Display	---	Vout: 4 digits, accuracy: 0.5% of rated output voltage +/-1count.
	---	Iout: 4 digits, accuracy: 0.5% of rated output current +/-1count.
3.Indications	---	VOLTAGE, CURRENT, ALARM, FINE, PREVIEW, FOLDBACK, LOCAL, OUTPUT ON, FRONT PANEL LOCK.

2.9 ENVIRONMENTAL CONDITIONS

1.Operating temperature	---	0~50°C, 100% load.
2.Storage temperature	---	-20~85°C
3.Operating humidity	%	20~90% RH (no condensation).
4.Storage humidity	%	10~95% RH (no condensation).
5.Altitude	---	Maximum 3000m. Derate output current by 2%/100m above 2000m.

2.10 MECHANICAL

1.Cooling	---	Forced air cooling by internal fans.
2.Weight	Kg	Less than 16Kg.
3.Dimensions (WxHxD)	mm	W: 423, H: 88, D: 442.5 (Refer to Outline drawing).
4.Vibration	---	MIL-810F, method 514.5
5.Shock	---	Less than 20G, half sine, 11mS. Unit is unpacked.

2.11 SAFETY/EMC

1.Applicable standards: Safety	---	UL60950-1 listed, EN60950-1. Vout≤40V: Output is SELV, IEEE/Isolated Analog are SELV. 60≤Vout≤400V: Output is hazardous, IEEE/Isolated Analog are SELV. 400<Vout≤600V: Output is hazardous, IEEE/Isolated Analog are not SELV.
EMC	---	EN55022, EN55024
2.Withstand voltage	---	Vout≤40V models: Input-Outputs (SELV): 4242VDC 1min, Input-Ground: 2828VDC 1min,
	---	40V<Vout≤100V models: Input-Haz. Output: 2600VDC 1min, Input-SELV: 4242VDC 1 min, Hazard. Output-SELV: 1900VDC 1min, Hazard. Output-Ground: 1200VDC 1 min, Input-Ground: 2828VDC 1min.
	---	100V<Vout≤600V models: Input-Haz. Output: 4000VDC 1min, Input-SELV: 4242VDC 1min, Hazard. Output-SELV: 3550VDC 1min, Hazard. Output-Ground: 2670VDC 1min, Input-Ground: 2828VDC 1min.
3.Insulation resistance	---	More than 100Mohm at 25°C, 70%RH.
4.Conducted emmision	---	EN55022A, FCC part 15-A, VCCI-A
5.Radiated emission	---	EN55022A, FCC part 15-A, VCCI-A

NOTES:

*1: Minimum voltage is guaranteed to maximum 0.2% of the rated output voltage.
*2: Minimum current is guaranteed to maximum 0.4% of the rated output current.
*3: For cases where conformance to various safety standards (UL, IEC etc.) is required, to be described as 190-240Vac (50/60Hz) for 3-Phase 200V models and 380~415Vac (50/60Hz) for 3-Phase 400V models.
*4: 3-Phase 200V models: at 200Vac input voltage
3-Phase 400V: at 380Vac input voltage. With rated output power.
*5: Not including EMI filter inrush current, less than 0.2mSec.
*6: 3-Phase 200V models: 170~265Vac, constant load.
3-Phase 400V models: 342-460Vac, constant load.
*7: From No-load to Full-load, constant input voltage. Measured at the sensing point in Remote Sense.
*8: For 8V~300V models: measured with JEITA RC-9131A (1:1) probe.
For 600V model: measured with 10:1 probe.
*9: From 10% to 90% or 90% to 10% of rated output voltage, with rated, resistive load.
*10: From 90% to 10% of rated output voltage.
*11: For load voltage change, equal to the unit voltage rating, constant input voltage.
*12: For 8V~16V models the ripple is measured at 2V rated output voltage and rated output current. For other models, the ripple is measured at 10~100% of rated output voltage and rated output current.
*13: The constant Current programming readback and monitoring accuracy does not include the warm-up and load regulation thermal drift.

2.12 SUPPLEMENTAL CHARACTERISTICS

The supplemental characteristics give typical but non-warranted performance characteristics. The supplemental characteristics are useful in assessing applications for the power supply. Several kinds of supplemental characteristics are listed below.

1. Evaluation Data: Typical performance of the power supply.
2. Reliability Data: Reliability Performance of the power supply.
3. EN61000 Data: Performance of the power supply under EN61000 test conditions.
4. EMI Data: Typical EMI (conducted and radiated) performance of the power supply.

The supplemental characteristics data is held in each TDK-Lambda Americas Inc. sales and service facility. For further details please contact the TDK-Lambda Americas Inc. office nearest you.

2.13 GENESYS™ 5000W POWER SUPPLIES OUTLINE DRAWINGS

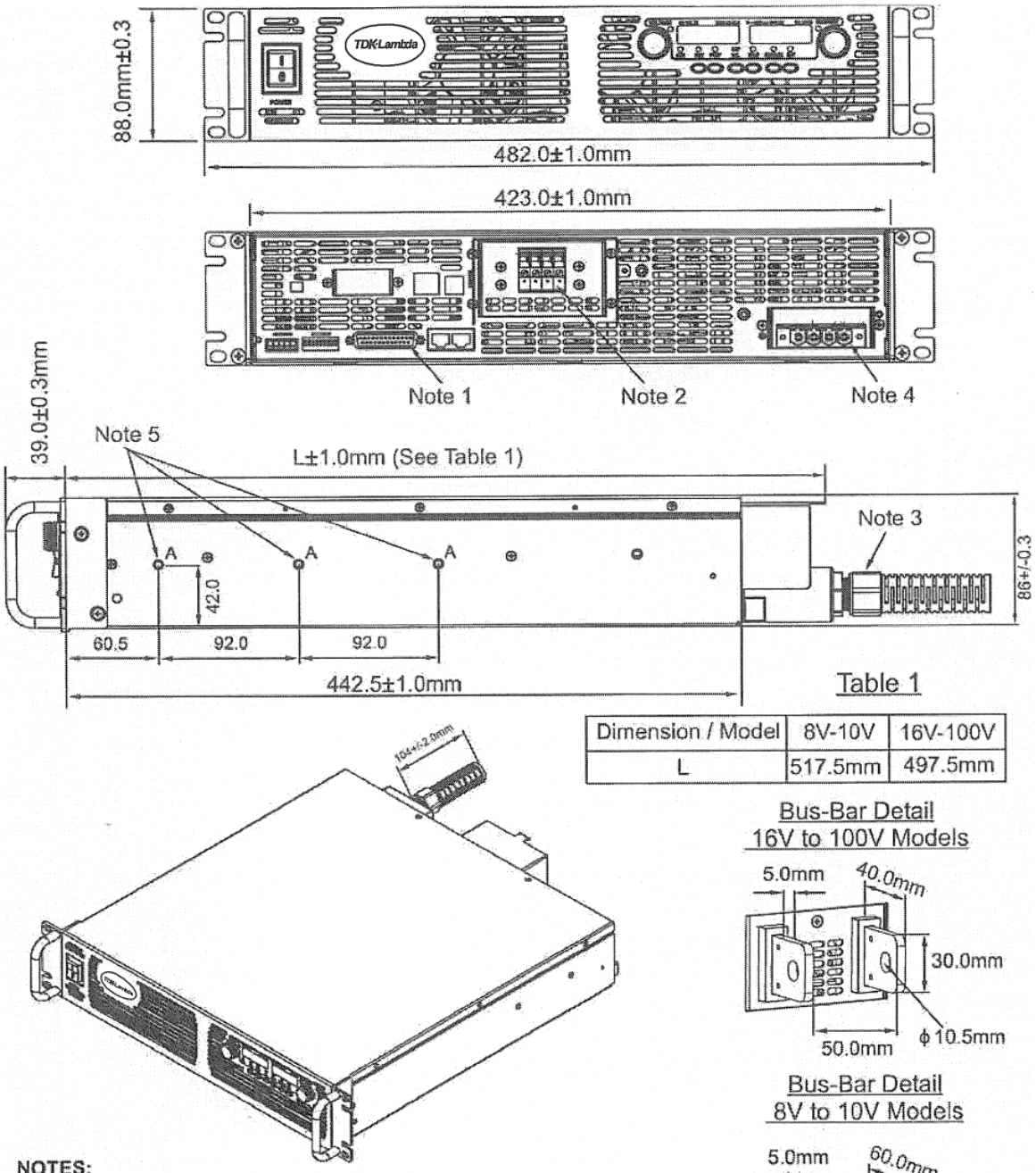

Table 1

Dimension / Model	8V-10V	16V-100V
L	517.5mm	497.5mm

NOTES:

1. Analog programming connector. Mating plug supplied with power supply.
2. Bus-bars for 8V to 100V models. See detail.
   Wire clamp connector for 150V to 600V models (shown).
3. AC cable strain relief (supplied with power supply).
4. AC Input connector (supplied with plug-in connector).
   Header P/N: PC6-16/4-GF-10,16 Phoenix Contact
5. Chassis slides mounting holes #10-32 marked "A". GENERAL DEVICES
   P/N: CC3001-00-S160 or equivalent.

CHAPTER 3 INSTALLATION

3.1 GENERAL

This Chapter contains instructions for initial inspection, preparation for use and repackaging for shipment. Connection to PC, setting the communication port and linking Genesys™ power supplies are described in Chapter 7.

WARNING

The Genesys™ series is intended only for installation in Restricted Access Location (RAL). Access to Hazardous parts (rear side of the power supply) shall be prevented after installation.

NOTE

Genesys™ power supplies generate magnetic fields, which might affect the operation of other instruments. If your equipment is susceptible to magnetic fields, do not position it adjacent to the power supply.

WARNING

To avoid electric shock hazard, do not insert conductive parts through the front panel slits.

3.2 PREPARATION FOR USE

In order to be operational the power supply must be connected to an appropriate AC source. The AC source voltage should be within the power supply specification. Do not apply power before reading Section 3.3, 3.6 and 3.7.

Table 3-1 below, describes the basic setup procedure. Follow the instructions in Table 3-1 in the sequence given to prepare the power supply for use.

Step no.	Item	Description	Reference
1	Inspection	Initial physical inspection of the power supply	Section 3.3
2	Installation	Installing the power supply, Ensuring adequate ventilation.	Section 3.4 Section 3.5
3	AC source	AC source requirements Connecting the power supply to the AC source	Section 3.6 Section 3.7
4	Test	Turn-on checkout procedure.	Section 3.8
5	Load connection	Wire size selection. Local/Remote sensing. Single or multiple loads.	Section 3.9
6	Default setting	The power supply setting at shipment.	Section 7.2.1

Table 3-1: Basic setup procedure

3.3 INITIAL INSPECTIONS

Prior to shipment this power supply was inspected and found free of mechanical or electrical defects. Upon unpacking of the power supply, inspect for any damage, which may have occurred in transit. The inspection should confirm that there is no exterior damage to the power supply such as broken knobs or connectors and that the front panel and meters face are not scratched or cracked. Keep all packing material until the inspection has been completed. If damage is detected, file a claim with carrier immediately and notify the TDK-Lambda Americas Inc. sales or authorized service facility nearest you.

3.4 RACK MOUNTING

The Genesys™ power supply series is designed to fit in a standard 19” equipment rack.

3.4.1 To install the Power Supply in a rack:

1. Use the front panel rack-mount brackets to install the power supply in the rack.
2. Use a support bar to provide adequate support for the rear of the power supply. Do not obstruct the air exhaust at the rear panel of the unit.

3.4.2 Rack Mount Slides (optional):

CAUTION

Ensure that the screws used to attach the slides to the unit do not penetrate more than 6mm into the sides of the unit.

Use rack mount slides: General Devices P/N: CC3001-00-S160 or equivalent to install the unit in a standard 19” equipment rack. Refer to Fig. 3-1 for slides assembly instructions. Use three #10-32x0.38”(max.) screws at each side. To prevent internal damage, use the specified screw length only.

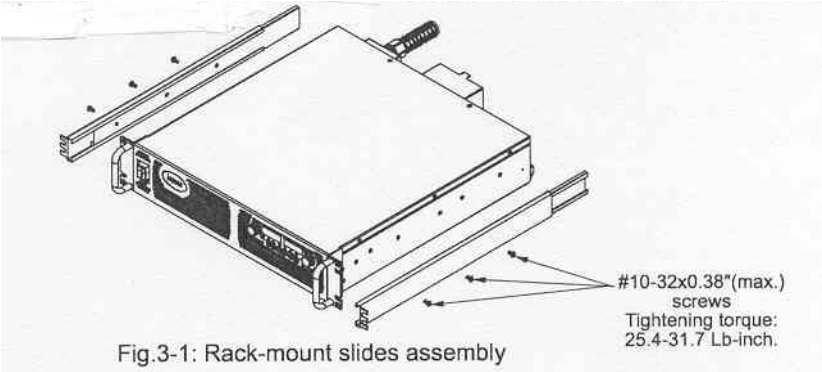

Fig.3-1: Rack-mount slides assembly

3.4.3 Plastic Supporting legs

Use the four plastic legs supplied with the unit, when the power supply is mounted on a surface or when units are stacked without rack support. When using the plastic legs, maximum three units can be stacked.

3.5 LOCATION, MOUNTING AND COOLING

This power supply is fan cooled. The air intake is at the front panel and the exhaust is at the rear panel. Upon installation, allow cooling air to reach the front panel ventilation inlets. Allow a minimum of 10cm (4 Inch) of unrestricted air space at the front and the rear of the unit.

The power supply should be used in an area that the ambient temperature does not exceed +50°C.

3.6 AC SOURCE REQUIREMENTS

The Genesys™ series designed for use in TN, TT and IT power distribution systems. Depending on its input option, the Genesys™ 5000W series can be operated from a nominal 190V to 240V. three phase, 47~63Hz or from a nominal 380-415V, three phase 47~63Hz. The input voltage range and current required for each model is specified in Chapter 2. Ensure that under heavy load, the AC voltage supplied to the power supply does not fall below the specifications described in Chapter 2.

3.7 AC INPUT POWER CONNECTION

CAUTION
Connection of this power supply to an AC power source should be made by an electrician or other qualified personnel

The power supply shall be connected to the AC source via protective device (circuit breaker, fuses, etc.) rated 30A max..

WARNING
There is a potential shock hazard if the power supply chassis (with cover in place) is not connected to an electrical safety ground via the safety ground in the AC input connector.

WARNING
Some components inside the power supply are at AC voltage even when the On/Off switch is in the “Off” position. To avoid electric shock hazard, disconnect the line cord and load and wait two minutes before removing cover.

The power supply ON/OFF switch is not the main disconnect device and does not completely disconnect all the circuits from the AC source.
An appropriately rated disconnect device such as circuit breaker, type B plug on power cord,…etc., shall be provided in the final installation. The disconnect device shall comply with UL/IEC 60950-1 requirements and shall be easily accessible.

3.7.1 AC Input Connector

The AC input connector is a header (Phoenix Contact P/N:PC6-16/4-GF-10,16) with a screw plug in connector (Phoenix Contact P/N:PC 6/4-STF-10,16), located on the rear panel.
Use suitable wires and tightening torque as follows:

1. Wire diameter:.
   12AWG for three-phase 200V models and
   14AWG for three-phase 400V models. Refer to Table 1-1 for details.
2. Tightening torque: 10.7-13.4Lb-inch. (1.2-1.5Nm).

3.7.2 AC Input Cord

WARNING
The AC input cord is not provided with the power supply

Refer to Section 1.3.4 for details of the AC input cords and to section 3.7 for disconnected device requirement.

3.7.3 AC Input Wire Connection

1. Strip the outside insulation of the AC cable approx. 10cm (3.94 inches). Trim the wires so that the ground wire is 10mm longer than the other wires. Strip 10mm (0.4 inches) at the end of each of the wires.

2. Unscrew the base of the strain relief from the helix-shaped body. Insert the base through the outside opening in the AC input cover and screw the locknut securely (11-14 Lb-inch.) (1.3 - 1.6Nm) into the base, from the inside.
3. Slide the helix-shaped body onto the AC cable. Insert the stripped wires through the strain relief base until the outer cable jacket is flush with the edge of the base. Tighten (16-18 Lb-inch.) (18 - 20Nm) the body to the base while holding the cable in place. Now the cable is securely fastened inside the strain relief. Refer to Fig. 3-2.

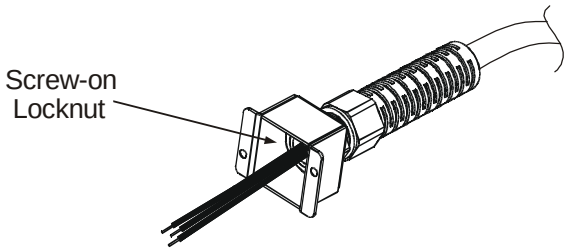

Fig.3-2: Stripped Wires installed in Strain Relief

4. Connect the AC wires to the terminals of the input plug supplied with the unit. To connect the wires, loosen the terminal screw, insert the stripped wire into the terminal and tighten the screw securely (10.7-13.4 Lb-inch). (1.21 – 1.5Nm) Refer to Fig. 3-3 for details. Pay attention to connect the wires according to the polarity marking on the plug.

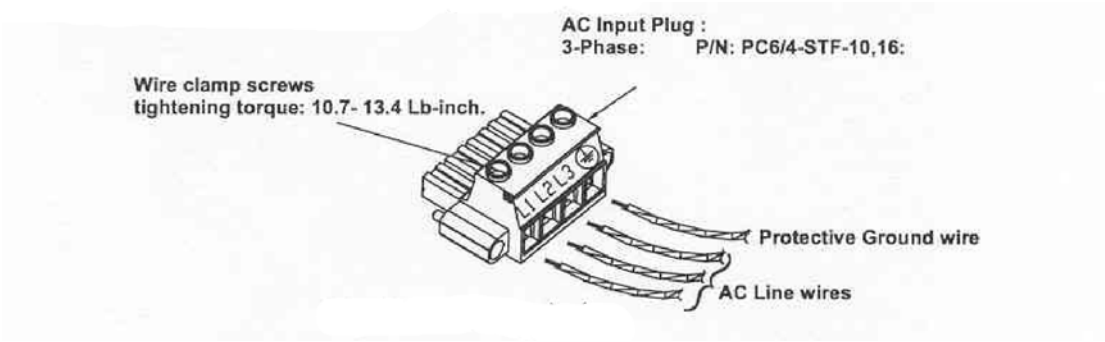

Fig.3-3: AC Input plug (3-Phase shown)

5. Connect the AC input plug to the AC input connector at the power supply rear panel. Fasten the plug to the connector using the two screws at each side of the plug.

   (Tightening torque: 10.7-13.4Lb inch)

   Route the wires inside the cover to prevent pinching. Fasten the cover to the unit using the M3x8 Flat Head screws are provided. Refer to Fig.3-4 for details. Tighten screws securely (4.8 - 4.9LB-inch, 0.54- - 0.55 Nm)

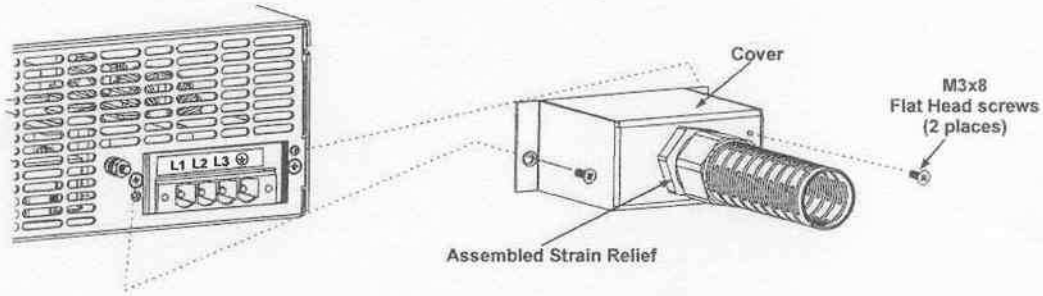

Fig.3-4: AC input cover and strain relief

3.8 TURN-ON CHECKOUT PROCEDURE

3.8.1 General

The following procedure ensures that the power supply is operational and may be used as a basic incoming inspection check. Refer to Fig. 4-1 and fig. 4-2 for the location of the controls indicated in the procedure.

3.8.2 Prior to Operation

1. Ensure that the power supply is configured to the default setting:
   - AC On/Off switch at Off position.
   - Dip switch: All positions at Down ("Off") position.
   - J2 Sense connector: Configured to Local Sense as shown in Fig. 3-5:

1 Remote (+) sense
2 Local (+) sense
3 Not connected
4 Local (-) sense
5 Remote (-) sense

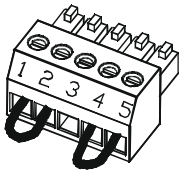

Plug P/N: MC1, 5/5-ST-3, 81 (Phoenix)

Fig.3-5: Sense connector default connection

   - For units equipped with IEEE option, ensure that the IEEE_En switch is in Up (default) position (Refer to Fig.4-2, item 9 for location), if checkout is to be done in IEEE mode.
2. Connect the unit to an AC source as described in Section 3.7.
3. Connect a DVM with appropriate cables for the rated voltage to the output terminals.
4. Turn the front panel AC power switch to On.

3.8.3 Constant Voltage Check

1. Turn on the output by pressing the OUT pushbutton so the OUT LED illuminates.
2. Observe the power supply VOLT display and rotate the Voltage encoder. Ensure that the Output Voltage varies while the VOLT encoder is rotated. The minimum control range is from zero to the maximum rated output for the power supply model.
   Compare the DVM reading with the front panel VOLT display to verify the accuracy of the VOLT display. Ensure that the front panel VOLT LED is On.
3. Turn Off the front panel AC power switch.

3.8.4 Constant Current Check

1. Ensure that the front panel AC power switch is at the Off position and the DVM connected to the output terminals shows zero voltage.
2. Connect a DC shunt across the output terminals. Ensure that the shunt and the wire current ratings are higher than the power supply rating. Connect a DVM to the shunt.
3. Turn the front panel AC power switch to the On position,
4. Turn On the output by pressing OUT pushbutton so the OUT LED illuminates.
5. Observe the power supply CURRENT display and rotate the CURRENT encoder. Ensure that the Output Current varies while the CURRENT encoder is rotated. The minimum control range is from zero to the maximum rated output for the power supply model.
   Compare the DVM reading with the front panel CURRENT display to verify the accuracy of the CURRENT display. Ensure that the front panel CURRENT LED is On.
6. Turn Off the front panel AC power switch.
7. Remove the shunt from the power supply output terminals.

3.8.5 OVP Check

Refer to Section 5.3 for explanation of the OVP function prior to performing the procedure below.

1. Turn the front panel AC power switch to the On position and turn on the output by pressing OUT pushbutton.
2. Using the VOLT encoder, adjust the Output Voltage to approx. 10% of the unit voltage rating.

3. Momentarily press the OVP/UVL button so that the CURRENT display shows “OUP”. The VOLTAGE display will show the last setting of the OVP level.
4. Rotate the VOLT encoder CCW to adjust the OVP setting to 50% of the unit voltage rating.
5. Wait a few seconds until the VOLT display returns to show the Output Voltage.
6. Adjust the Output Voltage toward its maximum and check that the Output Voltage cannot be increased more than the OVP setting.
7. Adjust OVP limit to the maximum by repeating Step 3 and rotating the VOLT encoder CW.

3.8.6 UVL Check

Refer to Section 5.4 for explanation of the UVL function prior to performing the procedure below.

1. Press the OVP/UVL button TWICE so that the CURRENT display shows “UUL”. The VOLTAGE display will show the last setting of the UVL level.
2. Rotate the VOLT encoder to adjust the UVL level to approx. 10% of the unit voltage rating.
3. Wait a few seconds until the VOLT display returns to show the output voltage.
4. Adjust the output voltage toward its minimum and check that the output voltage cannot be decreased below the UVL setting.
5. Adjust the UVL limit to the minimum by repeating Step 1 and rotating the VOLT encoder CCW.

3.8.7 Foldback Check

WARNING

Shorting the output may expose the user to hazardous voltages. Observe proper safety procedures.

Refer to Section 5.5 for explanation of the FOLD function prior to performing the procedure below.

1. Ensure that the Output Voltage is set to approx. 10% of the unit rating.
2. Adjust the CURRENT encoder to set the Output Current setting to approx. 10% of the unit rating.
3. Momentarily press the FOLD button. Ensure that the FOLD LED illuminates. The Output Voltage remains unchanged.
4. Short the output terminals momentarily (approx. 0.5 sec.). Ensure that the Output Voltage falls to zero, the VOLT display shows “Fb” and the ALARM LED blinks.
5. Press the FOLD button again to cancel the protection. The Output Voltage remains zero.
6. Press the OUT button. Ensure that the Output Voltage returns to its last setting.
7. Turn the output off by pressing the OUT button. Ensure that the VOLT display shows “OFF”.

3.8.8 Address Setting

1. Press and hold the REM/LOC button for approx. 3 sec. The VOLT display will show the communication port address.
2. Using the VOLT adjust encoder, check that the address can be set within the range of 0 to 30.

3.8.9 Baud Rate Setting (RS-232 and RS-485 only)

1. Press and hold the REM/LOC button for approx. 3 sec. The CURRENT display will show the communication port Baud Rate.

Using The CURRENT adjust encoder, check that the Baud Rate can be set to 1200, 2400, 4800, 9600 and 19200.

3.9 CONNECTING THE LOAD

WARNING
Turn Off the AC input power before making or changing any rear panel connection. Ensure that all connections are securely tightened before applying power. There is a potential shock hazard when using a power supply with a rated output greater than 40V.

3.9.1 Load Wiring

The following considerations should be made to select wiring for connecting the load to the power supply:

- Current carrying capacity of the wire (refer to Section 3.9.2)
- Insulation rating of the wire should be at least equivalent to the maximum output voltage of the power supply.
- Maximum wire length and voltage drop (refer to Section 3.9.2)
- Noise and impedance effects of the load wiring (refer to Section 3.9.4).

3.9.2 Current Carrying Capacity

Two factors must be considered when selecting the wire size:

1. Wires should be at least heavy enough not to overheat while carrying the power supply load current at the rated load, or the current that would flow in the event the load wires were shorted, whichever is greater.
2. Wire size should be selected to enable voltage drop per lead to be less than 1.0V at the rated current. Although units will compensate for up to 5V in each load wire, it is recommended to minimize the voltage drop (1V typical maximum) to prevent excessive output power consumption from the power supply and poor dynamic response to load changes. Please refer to Tables 3-2 and 3-3 for maximum wire length (to limit voltage drop) in American and European dimensions respectively.

Wire size AWG	Resistivity OHM/1000ft	Maximum length in Feet to limit voltage drop to 1V or less					
		10A	20A	50A	100A	200A	400A
14	2.526	40	20	8	4	2	---
12	1.589	60	30	12	6	3	---
10	0.9994	100	50	20	10	5	2
8	0.6285	160	80	32	15	8	4
6	0.3953	250	125	50	25	12	6
4	0.2486	400	200	80	40	20	10
2	0.1564	600	300	125	60	30	15
0	0.0983	1000	500	200	100	50	25

Table 3-2: Maximum wire length for 1V drop on lead (in feet)

Cross sect. area (mm²)	Resistivity OHM/Km	Maximum length in meters to limit voltage drop to 1V or less					
		10A	20A	50A	100A	200A	400A
2.5	8.21	12.0	6.0	2.4	1.2	0.6	0.3
4	5.09	18.6	9.8	4.0	2	1.0	0.5
6	3.39	29.4	14.8	5.8	2.9	1.45	0.7
10	1.95	51.2	25.6	10.2	5.1	2.5	1.25
16	1.24	80.0	40.0	16.0	8	4	2
25	0.795	125.0	62.0	25.2	12.6	6.3	3.1
35	0.565	177.0	88.0	35.4	17.7	8.8	4.4

Table 3-3: Maximum wire length for 1 V drop on lead (in meters)

For currents not shown in Table 3-2 and 3-3, use the formula:
Maximum length=1000/(current x resistivity)
Where current is expressed in Amperes and resistivity in ohms/km or ohms/1000ft.

3.9.3 Wire termination

The wires should be properly terminated with terminals securely attached. DO NOT use unterminated wires for load connection at the power supply.

CAUTION

When local sensing, a short from +LS or +S to -V or -S or -LS, will cause damage to the power supply. Reversing the sense wires might cause damage to the power supply in local and remote sensing. (Do not connect -S to +V or +S to -V).

3.9.4 Noise and Impedance Effects

To minimize the noise pickup or radiation, the load wires and remote sense wires should be twisted pairs to the shortest possible length. Shielding of sense leads may be necessary in high noise environments. Where shielding is used, connect the shield to the chassis via a rear panel Ground screw. Even if noise is not a concern, the load and remote sense wires should be twisted-pairs to reduce coupling, which might impact the stability of power supply. The sense leads should be separated from the power leads.

Twisting the load wires reduces the parasitic inductance of the cable, which could produce high frequency voltage spikes at the load and the output of the power supply, because of current variation in the load itself.

The impedance introduced between the power supply output and the load could make the ripple and noise at the load worse than the noise at the power supply rear panel output. Additional filtering with bypass capacitors at the load terminals may be required to bypass the high frequency load current.

3.9.5 Inductive loads

Inductive loads can produce voltage spikes that may be harmful to the power supply. A diode should be connected across the output. The diode voltage and current rating should be greater than the power supply maximum output voltage and current rating. Connect the cathode to the positive output and the anode to the negative output of the power supply.

Where positive load transients such as back EMF from a motor may occur, connect a surge suppressor across the output to protect the power supply. The breakdown voltage rating of the suppressor must be approximately 10% higher than the maximum output voltage of the power supply.

WARNING

Hazardous voltages may exist at the outputs and the load connections when using a power supply with a rated output greater than 40V. To protect personnel against accidental contact with hazardous voltages, ensure that the load and its connections have no accessible live parts. Ensure that the load wiring insulation rating is greater than or equal to the maximum output voltage of the power supply.

CAUTION

Ensure that the load wiring mounting hardware does not short the output terminals. Heavy connecting cables must have some form of strain relief to prevent loosening the connections or bending the bus-bars.

3.9.6 Making the load connections

8V to 100V Models

Refer to Fig.3-6 for connection of the load wires to the power supply bus-bars and to Fig.3-7 for mounting the bus-bars shield to the chassis.

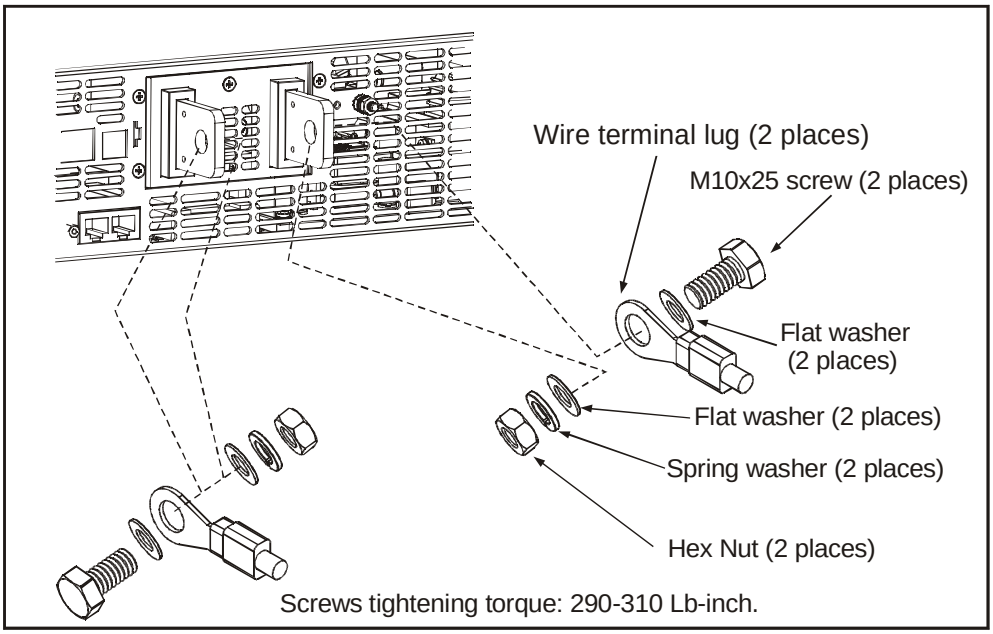

Fig. 3-6: Load wires connection, 8V to 100V models

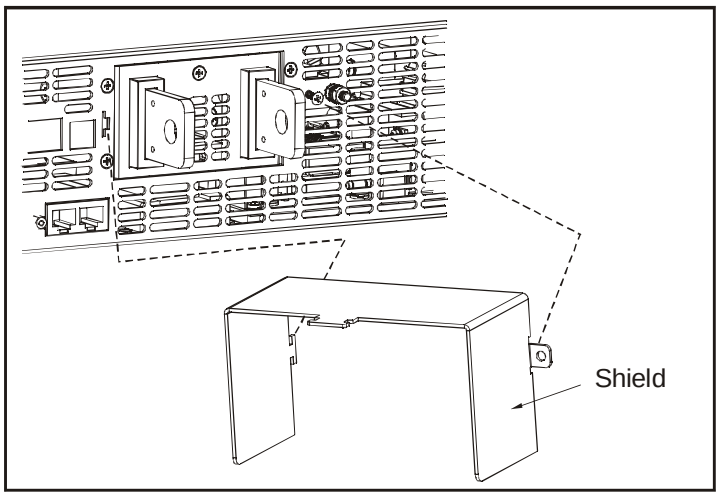

Fig. 3-7: Bus-bars shield mounting

150V to 600V Models

WARNING

Hazardous voltages exist at the outputs and the load connections. To protect personnel against accidental contact with hazardous voltages, ensure that the load and its connections have no accessible live parts. Ensure that the load wiring insulation rating is greater than or equal to the maximum output voltage of the power supply.

The 150V to 600V models have a four terminal wire clamp output connector. The two left terminals are the positive outputs and the two right terminals are the negative outputs. Max. 30A per terminal. The connector requirements are as follows:

1. Wires: AWG18 to AWG10.
2. Tightening torque: 4.4-5.3 Lb-inch. (0.5-0.6Nm).

Follow the instructions below for connection of the load wires to the power supply:

1. Strip approx. 10mm at the end of each of the wires.
2. Loosen the connector terminal screws.
3. Insert the stripped wires into the terminal and tighten the terminal screw securely (see Fig.3-8)

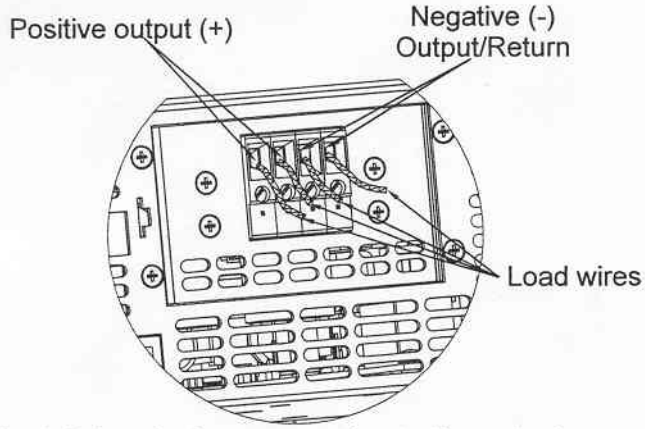

Fig.3-8: Load wires connection to the output connector

4. Loosen the two chassis screws marked “A” halfway as shown in Fig.3-9.
5. Assemble the protective shield to the chassis and tighten the two screws to fix the shield to the chassis (see Fig.3-9). Screws tightening torque: 4.8-5.3 Lb-inch. (0.5 - 0.6Nm)

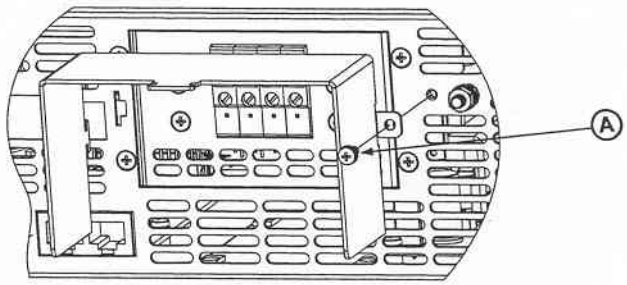

Fig.3-9: Shield assembly

6. Tighten the wires to one of the shield sides using ty-wrap or equivalent. Refer to Fig.3-10. Ensure that the wire length inside the shield is long enough to provide proper strain relief.

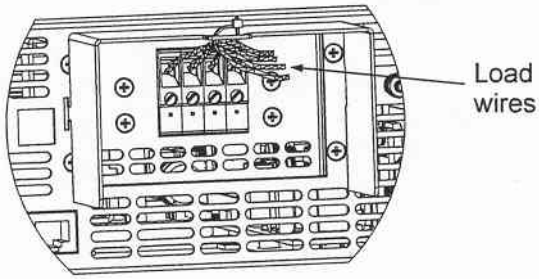

Fig.3-10: Protective shield and wires assembly

3.9.7 Connecting single loads, local sensing (default).

Fig.3-11 shows recommended load and sensing connections for a single load. The local sense lines shown are default connections at the rear panel J2 sense connector. Local sensing is suitable for applications where load regulation is less critical.

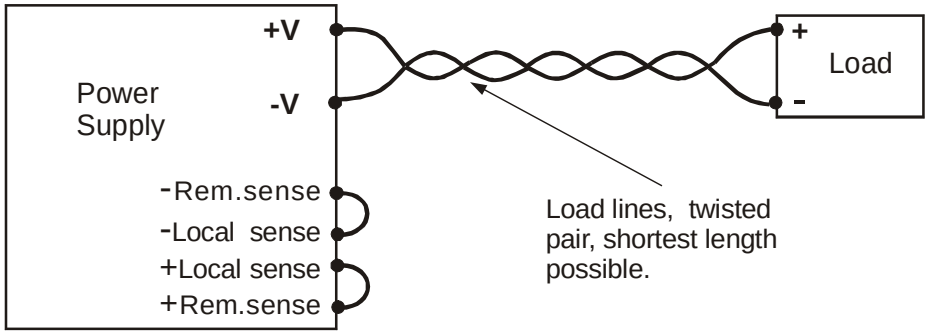

Fig.3-11: Single load connection, local sensing

3.9.8 Connecting single loads, remote sensing

Fig.3-12 shows recommended remote sensing connection for single loads. Remote sensing is used when, in Constant Voltage mode, the load regulation is important at the load terminals. Use twisted or shielded wires to minimize noise pick-up. If shielded wires are used, the shield should be connected to the ground at one point, either at the power supply chassis or the load ground. The optimal point for the shield ground should be determined by experimentation.

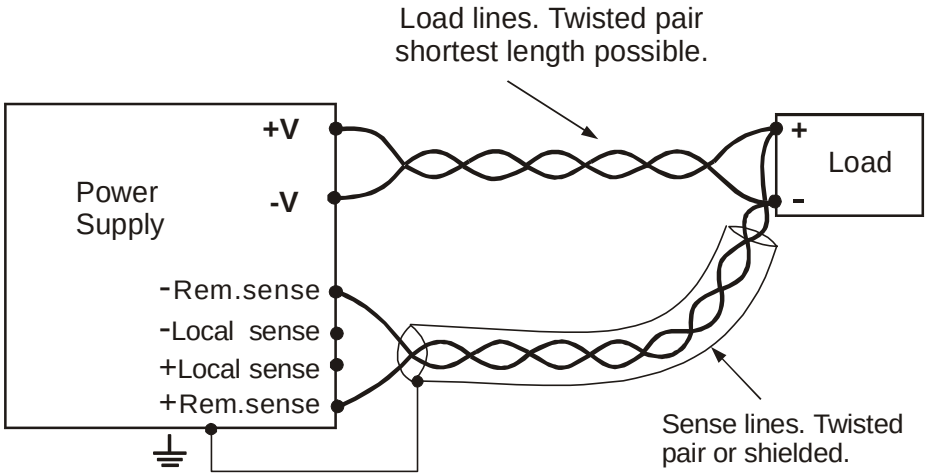

Fig.3-12: Remote sensing, single load

3.9.9 Connecting multiple loads, radial distribution method

Fig.3-13 shows multiple loads connected to one supply. Each load should be connected to the power supply's output terminals using separate pairs of wires. It is recommended that each pair of wires will be as short as possible and twisted or shielded to minimize noise pick-up and radiation. The sense wires should be connected to the power supply output terminals or to the load with the most critical load regulation requirement.

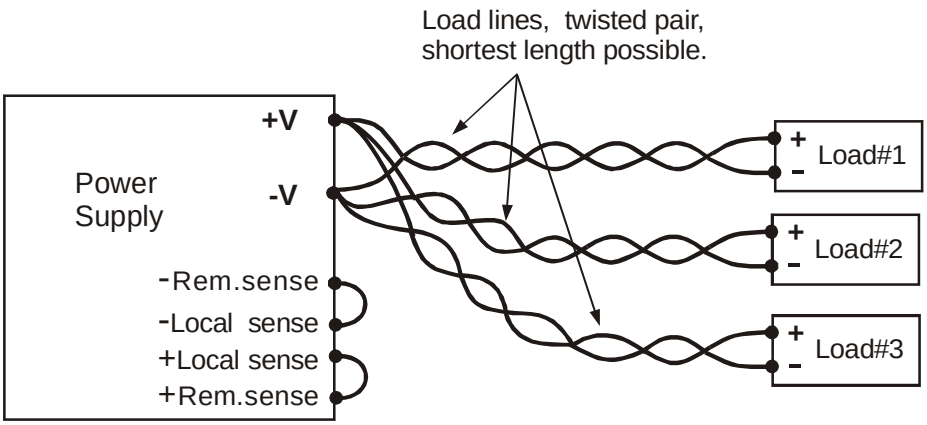

Fig.3-13: Multiple loads connection, radial distribution, local sense

3.9.10 Multiple load connection with distribution terminals

If remotely located output distribution terminals are used, the power supply output terminals should be connected to the distribution terminals by pair of twisted and/or shielded wires. Each load should be separately connected to the remote distribution terminals (see Fig.3-14).
If remote sensing is required, the sensing wires should be connected to the distribution terminals or at the most critical load.

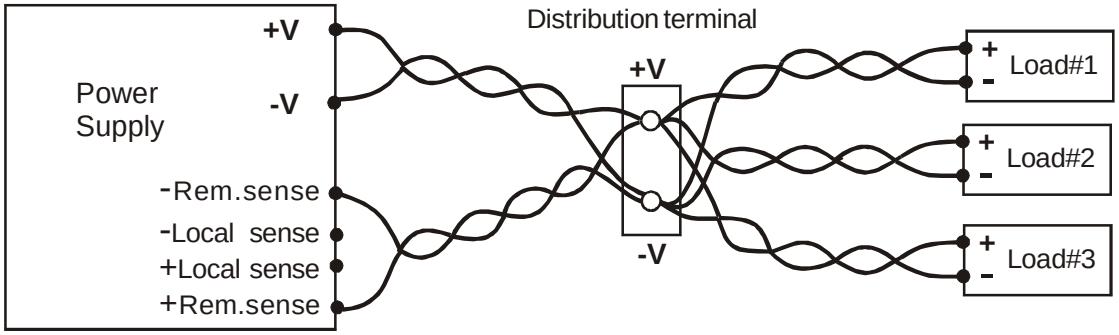

Fig.3-14: Multiple loads connection with distribution terminal

3.9.11 Grounding outputs

Either the positive or negative output terminals can be grounded. To avoid noise problems caused by common-mode current flowing from the load to ground, it is recommended to ground the output terminal as close as possible to the power supply chassis ground.
Always use two wires to connect the load to the power supply regardless of how the system is grounded.

WARNING

Models up to 60VDC Rated Output shall not float outputs more than +/-60VDC above/below chassis ground. Models > 60VDC Rated Output shall not float outputs more than +/-600VDC above/below chassis ground.

WARNING

OUTPUT TERMINAL GROUNDING

There is a potential shock hazard at the RS232/RS485 and the IEEE ports when using power supplies with rated or combined voltage greater than 400V with the Positive Output of the power supplies grounded. Do not connect the Positive output to ground when using the RS232/RS485 or IEEE under the above conditions.

3.10 LOCAL AND REMOTE SENSING

The rear panel J2 sense connector is used to configure the power supply for local or remote sensing of the Output Voltage. Refer to Fig.3-15 for sense connector location 3.10.1

3.10.1 Sense wiring

WARNING

There is a potential shock hazard at the sense connector when using a power supply with a rated Output Voltage greater than 40V. Local sense and remote sense wires should have a minimum insulation rating equivalent or greater than the maximum Output Voltage of the power supply. Ensure that the connections at the load end are shielded to prevent accidental contact with hazardous voltages.

3.10.2 Local sensing

The power supply is shipped with the rear panel J2 sense connector wired for local sensing of the Output Voltage. See Table 3-4 for J2 terminals assignment. With local sensing, the Output Voltage regulation is made at the output terminals. This method does not compensate for voltage drop on the load wires, therefore it is recommended only for low load current applications or where the load regulation is less critical.

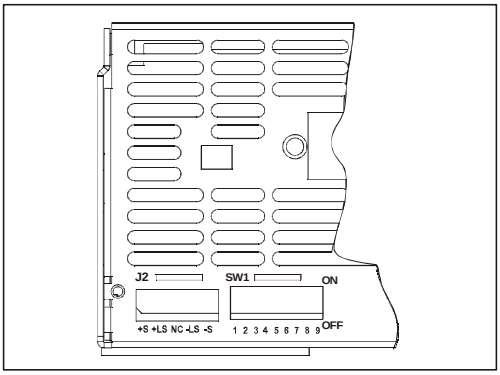

Fig.3-15: Sense connector location

Terminal	Function
J2-1	Remote positive sense (+S)
J2-2	Local positive sense. Connected internally to the positive output terminal (+LS).
J2-3	Not connected (NC)
J2-4	Local negative sense. Connected internally to the negative output terminal (-LS).
J2-5	Remote negative sense (-S).

Table 3-4: J2 terminals

3.10.3 Remote sensing

WARNING

There is a potential shock hazard at the sense point when using a power supply with a rated Output Voltage greater than 40V. Ensure that the connections at the load end are shielded to prevent accidental contact with hazardous voltages.

CAUTION

When using shielded sense wires, ground the shield in one place only. The location can be the power supply chassis or one of the output terminals.

Use remote sense where the load regulation at the load end is critical. In remote sense, the power supply will compensate for voltage drop on the load wires. Refer to the power supply specifications for the maximum voltage drop on load wires. The voltage drop is subtracted from the total voltage available at the output. Follow the instructions below to configure the power supply for remote sensing:

1. Ensure that the AC On/Off is in the Off position.
2. Remove the local sense jumpers from J2.
3. Connect the negative sense lead to terminal J2-5 (-S) and the positive sense lead to terminal J2-1(+S) of the J2 mating connector. Ensure that the J2 mating connector is plugged securely into the rear panel sense connector, J2.
4. Turn On the power supply.

Notes:

1. If the power supply is operating in remote sense and either the positive or negative load wire is not connected, an internal protection circuit will activate and shut down the power supply. To resume operation, turn the AC On/Off to the Off position, connect the open load wire, and turn On the power supply.
2. If the power supply is operated without the remote sense lines or local sense jumpers, it will continue to work, but the output voltage regulation will be degraded. Also, the OVP circuit may activate and shut down the power supply.

3.10.4 J2 sense connector technical information

- J2 connector type: MC 1.5/5-G-3.81, Phoenix.
- Plug type: MC 1.5/5-ST-3.81, Phoenix.
- Wire AWG; 28 up to 16.
- Stripping length: 7mm.
- Tightening torque: 1.95-2.21Lb-Inch. (0.22-0.25Nm)

3.11 REPACKAGING FOR SHIPMENT

To ensure safe transportation of the instrument, contact the TDK-Lambda Americas Inc. sales or service facility near you for Return Authorization and shipping information. Please attach a tag to the power supply describing the problem and specifying the owner, model number and serial number of the power supply. Refer to Warranty Information for further instructions.

CHAPTER 4 FRONT AND REAR PANEL CONTROLS AND CONNECTORS

4.1 INTRODUCTION

The Genesys™ Power Supply series has a full set of controls, indicators and connectors that allow the user to easily setup and operate the unit. Before starting to operate the unit, please read the following Sections for explanation of the functions of the controls and connectors terminals.

-Section 4.2: Front Panel Controls and Indicators.

-Section 4.3: Rear Panel Connections and Controls.

4.2 FRONT PANEL CONTROLS AND INDICATORS

See Fig.4-1 to review the controls, indicators and meters located on the power supply front panel.

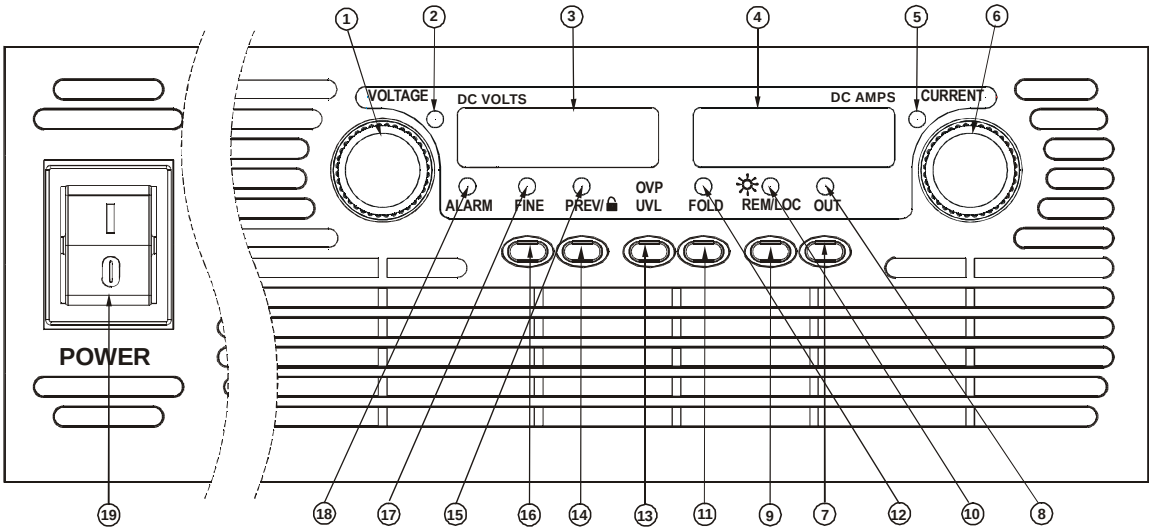

Fig.4-1: Front panel controls and indicators

Table 4-1: Front Panel controls and indicators

Number	Control/Indicator	Description	Section
1	VOLTAGE control	High resolution rotary encoder for adjusting the Output Voltage. Also adjusts the OVP/UVL levels and selects the Address	**5.2.1** **5.3.1** **5.4.1** **7.2.2**
2	VOLTAGE indicator	Green LED, lights for constant-Voltage mode operation.	
3	VOLTAGE display	4 digit, 7-segment LED display. Normally displays the Output Voltage. When the PREV button is pressed, the display indicates the programmed setting of the Output Voltage. When the OVP/UVL button is pressed, the Voltage display indicates the OVP/UVL setting.	

Table 4-1: Front Panel Controls and Indicators

Number	Control/Indicator	Description	Section
4	CURRENT display	4 digit, 7 segment LED display. Normally displays the output Current. When the PREV button is pressed, the display indicates the programmed setting of Output Current.	
5	CURRENT indicator	Green LED, lights for Constant-Current mode operation	
6	CURRENT control	High resolution rotary encoder for adjusting the Output Current. Also selects the Baud-Rate of the communication port.	5.2.2 7.2.4
7	OUT button	**Main function:** Output ON/OFF control. Press OUT to set the output On or Off. Press to reset and turn On the output after OVP or FOLD alarm events have occurred. **Auxiliary function:** Selects between “Safe-Start” and “Auto-Restart” modes. Press and hold OUT button to toggle between “Safe-Start” and “Auto-Restart”. The VOLT display will cycle between “SAF” and “AUT”. Releasing the OUT button while one of the modes is displayed, selects that mode.	5.6 5.11
8	OUT indicator	Green LED, lights when the DC output is enabled.	
9	REM/LOC button	**Main function**: Go to local. Press REM/LOC to put the unit into Local mode (REM/LOC button is disabled at Local Lockout mode). **Auxiliary function:** Address and Baud Rate setting. Press and hold REM/LOC for 3 sec. to set the Address with the VOLTAGE encoder and the Baud Rate with the CURRENT encoder.	7.2.5 7.2.2 7.2.4
10	REM/LOC indicator	Green LED, lights when the unit is in Remote mode.	
11	FOLD button	Foldback protection control. -Press FOLD to set Foldback protection to On. -To release Foldback alarm event, press OUT to enable the output and re-arm the protection. -Press FOLD again to cancel the Foldback protection.	5.5
12	FOLD indicator	Green LED, lights when Foldback protection is On.	
13	OVP/UVL button	Over Voltage Protection and Under Voltage limit setting. -Press once to set OVP using VOLTAGE encoder (the current display shows “OUP”) -Press again to set the UVL using VOLTAGE encoder (the current display shows “UUL”).	5.3 5.4
14	PREV/ button	**Main function:** Press PREV to display the Output Voltage and Current setting. For 5 sec. the display will show the setting and then it will return to show the actual Output Voltage and Current. **Auxiliary function:** Front Panel Lock. Press and hold PREV button to toggle between “Locked front panel” and “Unlocked front panel”. The display will cycle between “LFP” and “UFP”. Releasing the PREV button while one of the modes is displayed selects that mode.	5.17

Table 4-1: Front Panel Controls and Indicators (continued)

Number	Control/Indicator	Description	Section
15	PREV indicator	Green LED, lights when PREV button is pressed	
16	FINE button	Voltage and Current Fine/Coarse adjustment control. Operates as a toggle switch. In Fine mode, the VOLTAGE and CURRENT encoders operate with high resolution and in Coarse mode with lower resolution (approx. 6 turns). **Auxiliary function:** Advanced Parallel Operation Mode setting.	5.15.2
17	FINE indicator	Green LED, lights when the unit is in Fine mode.	
18	ALARM indicator	Red LED, blinks in case of fault detection. OVP, OTP Foldback, Enable and AC fail detection will cause the ALARM LED to blink.	
19	AC Power switch	AC On/Off control.	

4.3 REAR PANEL CONNECTIONS AND CONTROLS

See Fig.4-2 to review the connections and controls located on the power supply rear panel. Refer to Table 4-2 for explanations about the rear panel connections and controls.

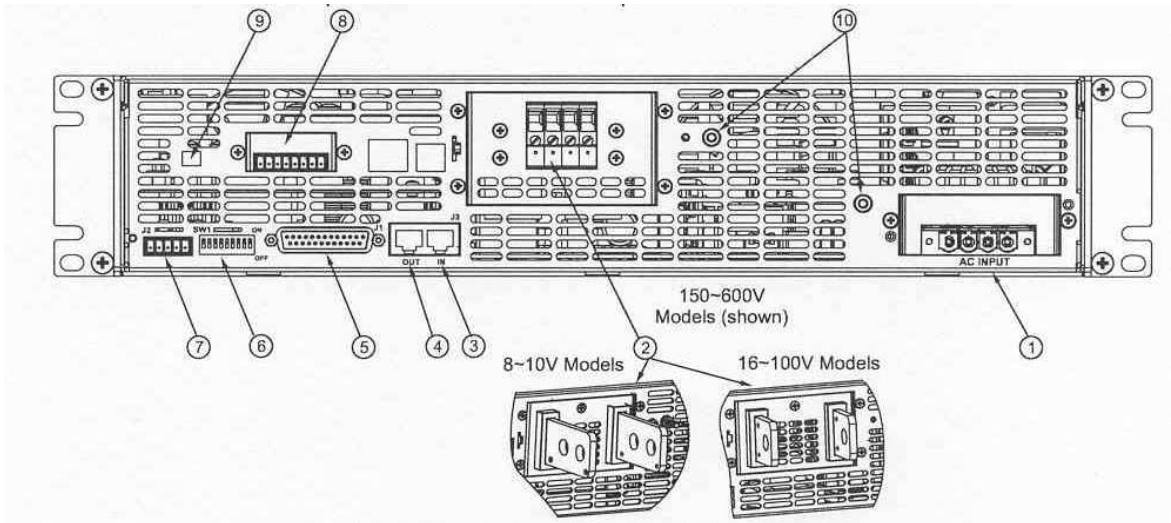

Fig.4-2: Rear panel connections and controls

Table 4-2: Rear panel connections and controls

Number	Item	Description	Section
1	AC input connector	Header w/ a screw plug connector (Phoenix contact PC6-1614-GF-10, 16).	3.7
2	DC output	Bus-bars for 8V to 100V models. Wire clamp connector for 150V to 600V models.	3.9.6
3	Remote-In connector	RJ-45 type connector, used for connecting power supplies to RS232 or RS485 port of computer for remote control purposes. When using several power supplies in a power system, the first unit Remote-In is connected to the computer and the remaining units are daisy-chained, Remote-In to Remote-Out.	7.3 7.4

Table 4-2: Rear panel Connections and Controls (continued)

Number	Item	Description	Section
4	Remote Out connector	RJ-45 type connector, used for daisy-chaining power supplies to form a serial communication bus.	7.3 7.4
5	J1 Analog programming and monitoring connector	Connector for remote analog interface. Includes Output Voltage and Current programming and monitoring signals, Shut-off control (electrical signal), Enable/Disable control (dry-contact), Power Supply OK (PS_OK) signal and operation mode (CV/CC) signal.	4.5
6	SW1 Setup switch	Nine position DIP-switch for selecting remote programming and monitoring modes for Output Voltage, Output Current and other control functions.	4.4 4.4.1 4.4.2
7	J2 Remote sense connector	Connector for making remote sensing connections to the load for regulation of the load voltage and compensation of load wire drop.	3.8.2 3.10.2 3.10.3
8	Blank Sub-plate	Blank sub-plate for standard units. Isolated Remote Analog programming connector for units equipped with Isolated Analog control option. IEEE connector for units equipped with IEEE programming option (shown).	
9	IEEE switch	Two position DIP-switch for selecting IEEE mode or RS232/RS485 mode when IEEE option is installed.	
10	Ground stud	M4 stud and hardware for chassis ground connection.	

4.4 REAR PANEL SW1 SETUP SWITCH

The SW1 Setup switch (see Fig.4-3) is a 9-position DIP-switch that allows the user to choose the following:

- Internal or remote programming for Output Voltage and Output Current.
- Remote voltage or resistive programming of Output Voltage and Output Current.
- Select range of remote voltage and resistive programming.
- Select range of output Voltage and Output Current monitoring.
- Select the Remote Shut-Off control logic.
- Select between RS232 and RS485 communication interface.
- Enable or disable the rear panel Enable/Disable control (dry contact).

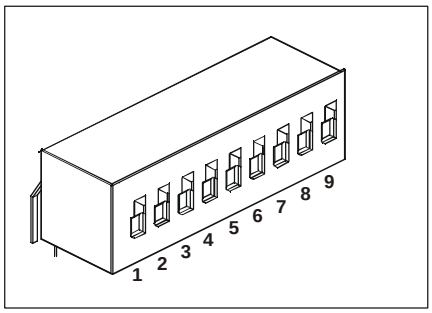

Fig.4-3: SW1 setup DIP-switch

4.4.1 SW1 position function

Refer to Table 4-3 for description of SW1 position functions. The factory default setting is Down for all positions.

Table 4-3: SW1 Positions Functions

Position	Function	DOWN (Factory default)	UP
SW1-1	Output Voltage Remote Analog Programming	Output Voltage Programmed by Front Panel	Output Voltage Programmed by remote analog External Voltage or External Resistor
SW1-2	Output Current Remote Analog programming	Output Current Programmed by Front Panel	Output Current programmed by remote analog External Voltage or External Resistor
SW1-3	Programming Range Select (Remote voltage/resistive)	0-5V/(0-5Kohm)	0-10V/(0-10Kohm)
SW1-4	Output Voltage and Current Monitoring Range	0-5V	0-10V
SW1-5	Shut-Off Logic select	On: High (2-15V) or Open Off: Low (0-0.6V) or Short	On: High (0-0.6V) or Short Off: Low (2-15V) or Open
SW1-6	RS232/485 select	RS232 interface	RS485 interface
SW1-7	Output Voltage Resistive Programming	Output Voltage programmed by Front Panel	Output Voltage programmed by External resistor
SW1-8	Output Current Resistive Programming	Output Current Limit Programmed by Front Panel	Output Current Limit Programmed by External Resistor
SW1-9	Enable/Disable control	Rear panel Enable/Disable control is not Active	Rear panel Enable/Disable control is Active

4.4.2 Resetting the SW1 switch

Before making any changes to the SW1 switch setting, disable the power supply output by pressing the front panel OUT button. Ensure that the Output Voltage falls to zero and the OUT LED is off. Then use any small flat-bladed screwdriver to change the SW1 switch setting.

4.5 REAR PANEL J1 PROGRAMMING AND MONITORING CONNECTOR

The J1 Programming and Monitoring connector is a DB25 subminiature connector located on the power supply rear panel. Refer to Table 4-4 for description of the connector functions. The power supply default configuration is Local operation, which does not require connections to J1. For remote operation using J1 signals, use the plug provided with power supply (or equivalent type). It is essential to use a plastic body plug to conform to Safety Agency requirements. If a shield is required for the J1 wires, connect the shield to a power supply chassis ground screw.

4.5.1 Making J1 connections

-J1 Connector type: AMP, P/N:5747461-3
-J1 plug description: AMP, P/N:745211-7
-Wire dimension range: AWG26-22
-Extraction tool: AMP, 91232-1 or equivalent.
-Manual Pistol grip tool:
Handle:AMP, P/N:58074-1
Head:AMP, P/N:58063-2

Before making any connection, turn the AC On/Off switch to the Off position and wait until the front panel display has turned Off.

CAUTION

The programming return terminals (12, 22 and 23) are referenced internally to the -V potential of the power supply. Do not attempt to bias any of these terminals relative to the negative sense. Use the Isolated Programming interface option to allow control from a programming source at a different potential relative to the power supply negative output.

CAUTION

To prevent ground loops and to maintain power supply isolation when programming from J1, use an ungrounded programming source.

WARNING

There is a potential shock hazard at the output when using a power supply with rated output greater than 40V. Use wires with minimum insulation rating equivalent to the maximum output voltage of the power supply.

Fig.4-4: J1 connector terminals and functions

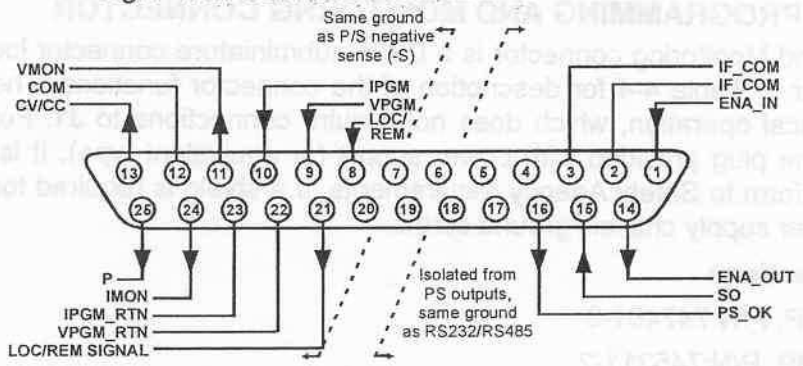

J1 contact	Signal name	Function	Reference
J1-1	ENA_IN	Enable/Disable the power supply output by dry-contact (short/open) with ENA_OUT.	Sec. 5.8
J1-2 J1-3	IF_COM	Isolated Interface Common. Return for the SO control, PS_OK signal and for the optional IEEE interface.	Sec.5.7, 5.10
J1-4~7	N/C	No Connection	
J1-8	LOCAL/ REMOTE	Input for selecting between Local or Remote analog programming of Output Voltage and Output Current.	Sec. 6.2
J1-9	VPGM	Input for remote analog voltage/resistance programming of the Output Voltage.	Sec. 6.1~6.4
J1-10	IPGM	Input for remote analog voltage/resistance programming of the Output Current.	Sec. 6.1~6.4
J1-11	VMON	Output for monitoring the power supply Output Voltage.	Sec. 6.6
J1-12	COM	Control Common. Return for VMON, IMON, CV/CC, LOC/REM. Connected internally to the negative sense potential (-S).	
J1-13	CV/CC	Output for Constant-Voltage/Constant-Current mode indication.	Sec. 5.9
J1-14	ENA_OUT	Enable/Disable the power supply output by dry-contact (short/open) with ENA_IN.	Sec. 5.8
J1-15	SO	Input for Shut-Off control of the power supply output.	Sec. 5.7
J1-16	PS_OK	Output for indication of the power supply status.	Sec. 5.10
J1-17~20	N/C	No Connection.	
J1-21	LOC/REM SIGNAL	Output for indicating if the unit is in Local or Remote analog programming mode.	Sec. 6.3
J1-22	VPGM_RTN	Return for VPGM input. Connected internally to the “-S”.	Sec. 6.1, 6.4, 6.5
J1-23	IPGM_RTN	Return for IPGM input. Connected internally to the “-S”.	Sec. 6.1, 6.4, 6.5
J1-24	IMON	Output for monitoring the power supply Output Current.	Sec. 6.6
J1-25	P	Output for current balance in parallel operation.	Sec. 5.15

CHAPTER 5 LOCAL OPERATION

5.1 INTRODUCTION

This Chapter describes the operating modes that are not involved in programming and monitoring the power supply via its serial communication port (RS232/RS485) or by remote analog signals. Ensure that the REM/LOC LED on the front panel is Off, indicating Local mode. If the REM/LOC LED is On, press the front panel REM/LOC button to change the operating mode to Local.

-For information regarding Remote Analog Programming, refer to Chapter 6.

-For information regarding usage of the Serial Communication Port, refer to Chapter 7.

5.2 STANDARD OPERATION

The power supply has two basic operating modes: Constant Voltage Mode and Constant Current Mode. The mode in which the power supply operates at any given time depends on the Output Voltage setting, Output Current setting and the load resistance.

5.2.1 Constant Voltage Mode

1. In constant voltage mode, the power supply regulates the Output Voltage at the selected value, while the load current varies as required by the load.
2. While the power supply operates in constant voltage mode, the VOLTAGE LED on the front panel illuminates.
3. Adjustment of the Output Voltage can be made when the power supply output is enabled (Output On) or disabled (Output Off). When the output is enabled, simply rotate the VOLTAGE encoder knob to program the output voltage. When the output is disabled, press the PREV button and then rotate the VOLTAGE encoder knob. The VOLTAGE meter will show the programmed Output Voltage for 5 seconds after the adjustment has been completed. Then the VOLTAGE meter will display “OFF”.
4. Adjustment resolution can be set to coarse or fine resolution. Press FINE button to select between the lower and higher resolution. The FINE LED turns On when the resolution is set to FINE.

NOTE

If after completing the adjustment, the display shows a different value than the setting, the power supply may be at current limit. Check the load condition and the power supply Output Current setting.

NOTE

The maximum and minimum setting values of the output voltage are limited by the Over Voltage protection and Under Voltage limit setting. Refer to Sections 5.3 and 5.4 for more details.

5.2.2 Constant Current Mode

1. In constant current mode, the power supply regulates the Output Current at the selected value, while the voltage varies with the load requirement.
2. While the power supply is operating in constant current mode, the CURRENT LED on the front panel illuminates.
3. Adjustment of the Output Current setting can be made when the power supply output is enabled (Output On) or disabled (Output Off).

   -Disabled output (Off): Press PREV button and then rotate the Current encoder knob. The CURRENT meter will show the programmed Output Current limit for 5 seconds after the adjustment has been completed. Then the VOLTAGE meter will display “OFF”.

-Enabled output, power supply in Constant Voltage mode: Press the PREV button and then rotate the CURRENT encoder knob. The CURRENT meter will show the programmed Output Current for 5 seconds after the adjustment has been completed, and then will return to show the actual load current.

-Enabled output, power supply in Constant Current mode: Rotate the CURRENT encoder knob to adjust the Output Current.

4. Adjustment resolution can be set to Coarse or Fine adjustment. Press the FINE button to select between the Coarse and Fine resolution. The FINE LED turns On when the resolution is set to FINE.

5.2.3 Automatic Crossover

If the power supply operates in Constant Voltage mode, while the load current is increased to greater than the current limit setting, the power supply will automatically switch to Constant Current mode. If the load is decreased to less than the current limit setting, the power supply will automatically switch back to Constant Voltage mode.

5.3 OVER VOLTAGE PROTECTION (OVP)

The OVP circuit protects the load in the event of a remote or local programming error or a power supply failure. The protection circuit monitors the voltage at the power supply sense points and thus provides the protection level at the load. Upon detection of an Over Voltage condition, the power supply output will shut down.

5.3.1 Setting the OVP level

The OVP can be set when the power supply output is Enabled (On) or Disabled (Off). To set the OVP level, press the OVP/UVL button, so that the CURRENT meter shows “OUP”. The VOLTAGE meter shows the OVP setting level. Rotate the VOLTAGE encoder knob to adjust the OVP level. The display will show “OUP” and the setting value for 5 seconds after the adjustment has been completed, and then will return to its previous state.

The minimum setting level is approximately 105% of the set Output Voltage, or the value in Table 7-6, whichever is higher. The maximum setting level is shown in Table 5-1.

To preview the OVP setting, press the OVP/UVL pushbutton so that the CURRENT display will show “OUP”. At this time, the VOLTAGE display will show the OVP setting. After 5 seconds, the display will return to its previous state.

Model	Max. OVP
8V	10.0V
10V	12.0V
16V	19.0V
20V	24.0V
30V	36.0V
40V	44.0V

Model	Max. OVP
60V	66.0V
80V	88.0V
100V	110.0V
150V	165.0V
300V	330.0V
600V	660.0V

Table 5-1: Maximum OVP setting levels

5.3.2 Activated OVP protection indications

When the OVP is activated the power supply output shuts down. The VOLTAGE display shows “OUP” and the ALARM LED blinks.

5.3.3 Resetting the OVP circuit

To reset the OVP circuit after it activates:

1. Reduce the power supply Output Voltage setting below the OVP set level.
2. Ensure that the load and the sense wiring are connected properly.
3. There are four methods to reset the OVP circuit.
   - 3.1 Press the OUT button.
   - 3.2 Turn the power supply Off using the AC On/Off switch, wait until the front panel display turns Off, then turn the power supply On using the AC On/Off switch.
   - 3.3 Turn the power supply output Off and then On using the SO control (refer to Section 5.7). In this method the power supply should be set to Auto-Restart mode.
   - 3.4 Send an OUT 1command via the RS232/RS485 communication port.

5.4 A UNDER VOLTAGE LIMIT (UVL)

The UVL prevents adjustment of the Output Voltage below a certain limit. The combination of UVL and OVP functions, allow the user to create a protection window for sensitive load circuitry.

5.4.1 Setting the UVL level

Setting the UVL can be made when the power supply output is Enabled (On) or Disabled (Off). To set the UVL level, press the OVP/UVL button TWICE, so that the CURRENT meter shows “UUL”. The VOLTAGE meter shows the UVL setting level. Rotate the VOLTAGE encoder knob to adjust the UVL level. The display will show ‘UUL” and the setting value for 5 seconds after the adjustment has been completed and then will return to its previous state.

UVL setting values are limited at the maximum level to approximately 95% of the Output Voltage setting. Attempting to adjust the UVL above this limit will result in no response to the adjustment attempt. The minimum UVL setting is zero.

5.5 FOLDBACK PROTECTION

Foldback protection will shut down the power supply output if the load current exceeds the current limit setting level. This protection is useful when the load circuitry is sensitive to an overcurrent condition.

5.5.1 Setting the Foldback protection

To arm the Foldback protection, the FOLD button should be pressed so that the FOLD LED illuminates. In this condition, transition from Constant Voltage to Constant Current mode will activate the Foldback protection. Activation of the Foldback protection disables the power supply output, causes the ALARM LED to blink and displays “Fb” on the VOLTAGE meter.

5.5.2 Resetting activated Foldback protection

There are four methods to reset an activated Foldback protection.

1. Press the OUT button. The power supply output is enabled and the Output Voltage and Current will return to their last setting. In this method, the Foldback protection remains armed, therefore if the load current is higher than the current limit setting, the Foldback protection will be activated again.
2. Press the FOLD button to cancel the Foldback protection. The power supply output will be disabled and the VOLTAGE display will show “OFF”. Press the OUT button to enable the power supply output.
3. Turn the power supply output Off and then On using the SO control (refer to Section 5.7). In this method the Foldback protection remains armed, therefore if the load current is higher than the output current setting, the Foldback protection will be activated.
4. Turn the power supply Off using the AC On/Off switch, wait until the front panel display turns Off, then turn the unit back ON again. The power supply output is enabled and the Output Voltage and Current will return to their last setting. In this method, the Foldback protection remains armed, therefore if the load current is higher than the output current setting, the Foldback protection will be activated again.

5.6 OUTPUT ON/OFF CONTROL

The Output On/Off Enables or Disables the power supply output. Use this function to make adjustments to either the power supply or the load without shutting off the AC power. The Output On/Off can be activated from the front panel using the OUT button or from the rear panel J1 connector. The OUT button can be pressed at any time to Enable or Disable the power supply output. When the output is disabled, the Output Voltage and Current fall to zero and the VOLTAGE display shows “OFF”.

5.7 OUTPUT SHUT-OFF (SO) CONTROL VIA REAR PANEL J1 CONNECTOR

Contacts 2, 3 and 15 of J1 (Fig.4-2, Item 5) serve as Output Shut-Off (SO) terminals. The SO terminals accept a 2.5V to 15V signal or Open-Short contact to disable or enable the power supply output. The SO function will be activated only when a transition from On to Off is detected after applying AC power to the unit. (Thus, in Auto-Restart mode, the output will be Enabled after applying AC power; even if SO is at an Off level). After an On to Off transition it is detected, the SO will Enable or Disable the power supply output according to the signal level or the short/open applied to J1. This function is

useful for connecting power supplies in a “Daisy-chain” (refer to Section 5.16). The SO control can also be used to reset the OVP and Fold Protection (refer to Section 5.3 and 5.5 for details).
When the unit is shut-off by a J1 signal, the VOLTAGE display will show “SO” to indicate the unit state. J1 contact 15 is the SO signal input and contacts 2 and 3, IF_COM, are the signal return (connected internally). Contacts 2, 3 and 15 are optically isolated from the power supply output.
The SO control logic can be selected by the rear panel SW1 Setup switch. Refer to Table 5-2 for SW1 setting and SO Control Logic.

SW1-5 setting	SO signal level J1-2(3), 15	Power supply output	Display
Down (default)	2-15V or Open 0-0.6V or Short	On Off	Voltage/Current “SO”
Up	2-15V or Open 0-0.6V or Short	Off On	“SO” Voltage/Current

Table 5-2: SO logic selection

5.8 ENABLE/DISABLE CONTROL VIA REAR PANEL J1 CONNECTOR

Contacts 1 and 14 of J1 (Fig.4-2, item 5) serve as Output Enable/Disable terminals by switch or relay. This function is Enabled or Disabled by the SW1 Setup switch position 9. Refer to Table 5-3 for Enable/Disable function and SW1 setting.

SW1-9 setting	Enable/Disable Inputs	Power supply output	Display	ALARM LED
Down (Default)	Open or Short	On	Voltage/Current	Off
Up	Open	Off	“ENA”	Blinking
	Short	On	Voltage/Current	Off

Table 5-3: Enable/Disable function and SW1 setting

5.9 CV/CC SIGNAL

CAUTION
To prevent possible damage to the unit, do not connect any of the Enable/Disable inputs to the positive or negative output potential.

NOTE
Safe Start mode-If the Enable/Disable fault condition clears when units in safe start mode recovery is by pressing OUT button or by sending an ‘OUT 1’ serial command.
Auto Restart mode-The output will return back ON automatically when the Enable/Disable fault conditions clears.

CV/CC signal indicates the operating mode of the power supply, Constant Voltage or Constant Current. The CV/CC signal is an open collector output with a 30V parallel zener, at J1-13, referenced to the COM potential at J1-12 (connected internally to the negative sense potential). When the power supply operates in Constant Voltage mode, CV/CC output is open. When the power supply operates in Constant Current mode, the CV/CC signal output is low (0-0.6), with maximum 10mA sink current.

CAUTION
Do not connect the CV/CC signal to a voltage source higher than 30VDC. Always connect the CV/CC signal to voltage source with a series resistor to limit the sink current to less than 10mA.

5.10 PS_OK SIGNAL

The PS_OK signal indicates the fault condition of the power supply. PS_OK is a TTL signal output at J1-16, referenced to IF_COM at J1-2, 3 (Isolated Interface Common). When a fault condition occurs, the PS_OK level is low, with a maximum sink current of 1mA; when no fault condition occurs, the PS_OK level is high with a maximum source current of 2mA. The following faults will set the PS_OK to a Fault state:

*OTP	*Enable/Disable open (Power supply is disabled)
*OVP	*SO (Rear panel Shut-Off, Power Supply is shut off)
*Foldback	*IEEE failure (With optional IEEE interface)
*AC fail	*Output Off

5.11 SAFE-START AND AUTO-RESTART MODES

When turning On the power supply AC On/Off, it can start to its last setting of Output Voltage and Current with the output Enabled (Auto-restart mode) or start with the output Disabled (Safe-start mode). Press and hold the OUT button to select between Safe-start and Auto-restart modes. The VOLTAGE display will continuously cycle between “SAF” and “AU7” every 3 seconds. Releasing the OUT pushbutton while one of the modes is displayed, selects that mode. The default setting at shipment is Safe-start mode.

5.11.1 Auto-restart mode

In this mode, the power supply restores its last operation setting. Upon start-up, the output is enabled or disabled according to its last setting.

5.11.2 Safe-start mode

In this mode, the power supply restores its last operation setting and sets the Output to an Off state. At start-up, the output is Disabled and the Output Voltage and Current are zero. To Enable the output and restore the last Output Voltage and Current values, momentarily press the OUT button.

5.12 OVER TEMPERATURE PROTECTON (OTP)

The OTP circuit shuts down the power supply before the internal components can exceed their safe internal operating temperature. When an OTP shutdown occurs, the display shows “O7P” and the ALARM LED blinks.

Resetting the OTP circuit can be automatic (non-latched) or manual (latched) depending on the Safe-start or Auto-restart mode.

1. **Safe-start mode:** In Safe-start mode, the power supply stays Off after the over temperature condition has been removed. The display continues to show “O7P” and the ALARM LED continues to blink. To reset the OTP circuit, press the OUT button (or send an OUT ON command via the serial port).
2. **Auto-restart mode:** In Auto-restart mode, the power supply recovers to its last setting automatically when the over temperature condition is removed.

5.13 LAST SETTING MEMORY

The power supply is equipped with Last Setting Memory, which stores several power supply parameters at each AC turn-off sequence.

STORED PARAMETERS:

1. OUT On or Off
2. Output Voltage setting (PV setting)
3. Output Current setting (PC setting)
4. OVP level
5. UVL level
6. FOLD setting
7. Start-up mode (Safe-start or Auto-restart)
8. Remote/Local: If the last setting was Local Lockout, (latched mode), the supply will return to Remote mode (non-latched).
9. Address setting
10. Baud rate
11. Locked/Unlocked Front Panel (LFP/UFP)

(Items 8, 9, 10 are related to Remote Digital Control operation and are explained in Chapter 7)

12. Master/Slave setting

5.14 SERIES OPERATION

Power supplies of the SAME MODEL can be connected in series to obtain increased output voltage. Split connection of the power supplies gives positive and negative output voltage.

CAUTION
Do not connected power supplies from different manufacturers in series or in parallel.

5.14.1 Series connection for increased output voltage

In this mode, two units are connected so that their outputs are summed. Set the Current of each power supply to the maximum that the load can handle without damage. It is recommended that diodes be connected in parallel with each unit output to prevent reverse voltage during start up sequence or in case one unit shuts down. Each diode should be rated to at least the power supply rated Output Voltage and Output Current. Refer to Fig.5-1 and 5-2 for series operation with local and remote sensing.

WARNING
When power supplies are connected in series, and the load or one of the output terminals is grounded, no point may be at a greater potential of +/-60VDC from ground for models up to 60VDC Rated Output and +/-600VDC from ground for models >60VDC Rated Output. When using RS232/RS485 or IEEE, refer to the OUTPUT TERMINALS GROUNDING warning in Section 3.9.11.

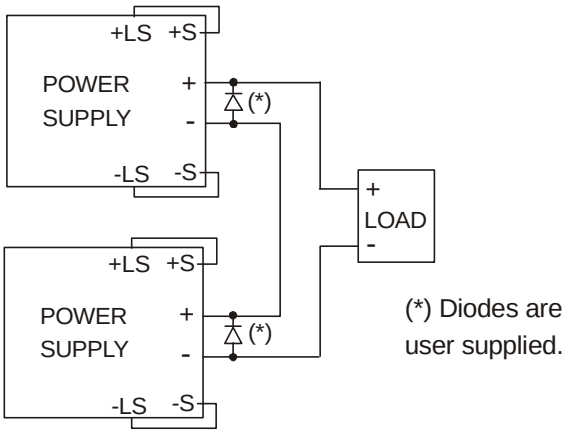

Fig.5-1: Series connection, local sensing

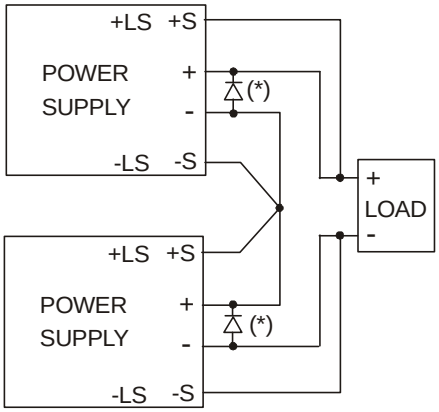

Fig.5-2: Series connection, remote sensing

Remote programming in series operation for increased output voltage:

1. Programming by external voltage: The analog programming circuits of this power supply are referenced to the negative output potential. Therefore, the circuits used to control each series connected unit must be separated and floated from each other.

2. Using the SO function and PS_OK signal: The Shut-Off and PS_OK circuits are referenced to the isolated interface common, IF_COM (J1-2,3). The IF_COM terminals of different units can be connected to obtain a single control circuit for the power supplies connected in series.

3. Programming by external resistor: Programming by external resistor is possible. Refer to Section 6-5 for details.

4. Programming via the Serial Communication port (RS232/RS485): The communication port is referenced to the IF_COM which is isolated from the power supply output potential. Therefore power supplies connected in series can be daisy-chained using the Remote-In and Remote-Out connectors. Refer to Chapter 7 for details.

5.14.2 Series connection for positive and negative output voltage

In this mode, two units are configured as a positive and negative output. Set the Output Current limit of each power supply to the maximum that the load can handle without damage. It is recommended that diodes be connected in parallel with each unit output to prevent reverse voltage during start-up or in case one of the units shuts down. Each diode should be rated to at least the power supply rated output voltage and output current. Refer to Fig.5-3 for this operating mode.

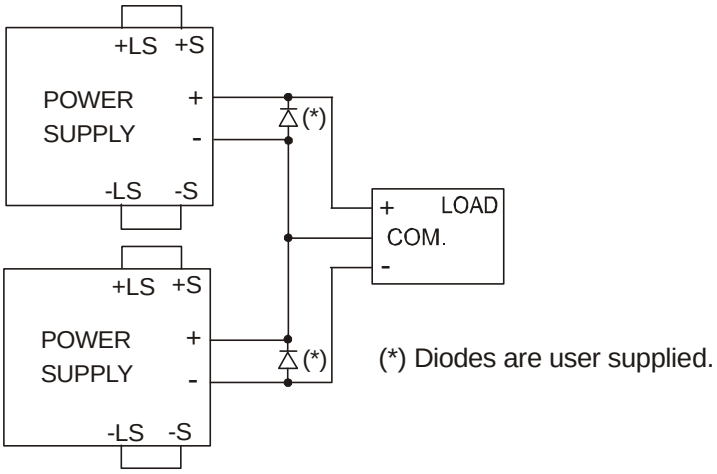

Fig.5-3: Series connection for positive/negative output voltages

Remote programming in series operation for positive and negative output voltage

1. Programming by external voltage: The analog programming circuits of this power supply are referenced to the negative output potential. Therefore, the circuits used to control each series connected unit must be separated and floated from each other.

2. Using the SO function and PS_OK signal: The Shut-Off and PS_OK circuits are referenced to the isolated interface common, IF_COM (J1-2,3). The IF_COM terminals of the units can be connected to obtain a single control circuit for the power supplies connected in series.

3. Programming by external resistor: Programming by external resistor is possible. Refer to section 6.5 for details.

4. Programming via the Serial Communication port (RS232/RS485): The communication port is referenced to the IF_COM which is isolated from the power supply output potential. Therefore power supplies connected in series can be chained using the Remote-In and Remote-Out connectors. Refer to chapter 7 for details.

5.15 PARALLEL OPERATION

Up to four units of the same VOLTAGE and CURRENT rating can be connected in parallel to provide up to four times the Output Current capability. One of the units operates as a Master and the remaining units are Slaves. The Slave units are analog programmed by the Master unit. In remote digital operation, only the Master unit can be programmed by the computer, while the Slave units may be connected to the computer for voltage, current and status readback only. Follow the following procedure to configure multiple supplies for parallel operation. Refer to Sec. 5.15.1 and to Sec. 5.15.2 for detailed explanation.

5.15.1 Basic parallel operation

In this method, setting the units as Master and Slaves is made by the rear panel J1 connections and the setup switch SW1. Each unit displays its own output current and voltage. To program the load current, the Master unit should be programmed to the total load current divided by the number of units in the system. Refer to the following procedure to configure multiple supplies for basic parallel operation.

1. Setting up the Master unit

Set the Master unit Output Voltage to the desired voltage. Program the Output Current to the desired load current divided by the number of parallel units. During operation, the Master unit operates in CV mode, regulating the load voltage at the programmed Output Voltage. Connect the sensing circuit to local or remote sensing as shown in Fig.5-4 or fig.5-5.

2. Setting up the Slave units

-1. The Output Voltage of the Slave units should be programmed 2-5% higher than the Output Voltage of the Master unit to prevent interference with the Master unit's control. The Output Current setting of each unit should be programmed to the desired load current divided by the number of parallel units.

-2. Set the rear panel setup switch SW1 position 2 to the up position.

-3. Connect a wire jumper between J1-8 and J1-12 (refer to Table 4-4).

-4. Connect J1 terminal 10(IPGM) of the slave unit to J1 terminal 25(P) of the master unit.

-5. Connect J1 terminal 23(IPGM_RTN) of the slave unit to J1 terminal 12 (COM) of the master unit.

During operation, the Slave units operate as a controlled current source following the Master Output Current. It is recommended that the power system be designed so that each unit supplies up to 95% of its current rating because of the imbalance which may be caused by cabling and connection voltage drop.

3. Daisy Chain Connection: (See Fig. 5.6)

These set up and connections are optional but is strongly recommended. It will shut down all power supplies when a fault condition occurs in any one of them.

- Switch SW1 position 5 should be in its down position for all power supplies.
- Connect J1-16 of the Master Supply to J1-15 of the 'First' Slave Supply (If any).
- Connect J1-16 of the 'First' Slave Supply to J1-15 of the 'Second' Slave Supply (If any).
- Connect J1-16 of the 'Second' Slave Supply to J1-15 of the 'Third' Slave Supply (If any).
- Connect J1-16 of the 'Last' Slave Supply to J1-15 of the 'Third' Slave Supply (If any).
- Connect J1-2 (or J1-3) common to all supplies (See Fig. 5.6).

4. Setting Over Voltage protection

The Master unit OVP setting should be programmed to the desired OVP level. The OVP setting of the slave units should be programmed to a higher value than the Master OVP. When the Master unit shuts down, it programs the Slave unit to zero Output Voltage. If a Slave unit shuts down (when its OVP is set lower than the Master Output Voltage and, if all P/S are not daisy chained per section 3 above), only that Slave unit would shut down, and the remaining Slave units would supply all the load current.

5. Setting Foldback protection

Foldback protection, is desired, may only be used with the Master unit. When the Master unit shuts down, it programs the Slave units to zero Output Voltage.

6. Connection to the load

In parallel operation, power supplies can be connected in local or remote sensing. Refer to Fig. 5-4 and 5-5 for typical connections of parallel power supplies. The figures show connection of two units, however the same connection method applies for up to 4 units.

5.15.2 Advanced parallel operation

In this method, multiple supplies can be configured to parallel operation as a single power supply. The total load current and output voltage are displayed by the Master unit and can be readback from the Master unit. The Slave units display only their operating status (On, Off or Fault condition).

Refer to the following procedure to configure multiple supplies for Advanced parallel operation.

1. Advanced parallel configuration.

a) SW1 position 2 - Down in the Master Supply and up in all Slave Supplies.

- Connect a short between J1-8 and J1-12 in all Slave Supplies.
- Connect J1-25 of the Master Supply to J1-10 of all Slave Supplies.
- Connect J1 terminal 23 (IPGM-RTN) of the slave unit to J1 terminal 12 (COM) of master unit.
- The following set up connections are optional but are strongly recommended. These set up and connections will shut down all the parallel power supplies when fault condition occurs in any one of them.
- Switch SW1 position 5 should be in its down position for all power supplies (See Fig. 5.6).
- Connect J1-16 of the Master Supply to J1-15 of the 'First' Slave Supply.
- Connect J1-16 of the 'First' Slave Supply to J1-15 of the 'Second' Slave Supply (if any)
- Connect J1-16 of the 'Second' Slave Supply to J1-15 of the 'Third' Slave Supply (if any)
- Connect J1-16 of the 'Last' Slave Supply to J1-15 of the Master Supply
- Connect J1-2 (or J1-3) common to all supplies (See fig. 5.6).

2. Connection to the Load

In parallel operation, power supplies can be connected in local or remote sensing. Refer to Fig. 5-4 and 5-5 for typical connections of parallel power supplies. The figures show connection of two units, however the same connection method applies for up to 4 units.

3. Setting the units as Master or Slave

a) Depress and hold the FINE button for 3 seconds. The Master/Slave configuration will be displayed on the Current Display. Rotate the CURRENT encoder to obtain the desired mode. Refer to Table 5-4 for the CURRENT display and modes of operation.

CURRENT Display	Operating Mode
H1	Single supply (default)
H2	Master supply with 1 Slave supply
H3	Master supply with 2 Slave supplies
H4	Master supply with 3 Slave supplies
S	Slave supply

Table 5-4: Setting mode of operation

b) When the desired configuration is obtained, depress and release the FINE button or wait approx. 5 seconds.

4. Master and Slave units default operation

a) When a unit is programmed to Slave mode it enters the Remote mode with Local Lockout. In this mode, the front panel controls are disabled to prevent accidental setting change (refer to Sec. 7.2.7 for details).

b) The Slave unit's parameters will automatically set the following:

*Output voltage to approximate 102% of rated output voltage.
*Programmed Current to zero.
*UVL to zero volts

*OVP to its maximum value
*AST On
*OUT On
*Foldback protection Off

c) The Master and Slave modes are stored in the power supply EEPROM when the AC power is turned off. The system will return to the Master/Slave mode upon re-application of AC power.

5. CURRENT display accuracy

In the advanced parallel mode, the Master unit calculates the total current by multiplying the Master output current by the number of Slave units. In this method, the CURRENT display accuracy is 2% +/- 1 count. In cases that higher accuracy is required, it is recommended to use the basic parallel operation mode.

6. To release units from Slave mode

Slave units can be released using the following procedure:

a) Depress FINE button for 3 seconds. The Master/Slave configuration will be displayed on the CURRENT display.

b) Select H1 mode using the CURRENT encoder.

c) Depress FINE button again or wait 5 seconds.

d) Turn the AC power Off to store the new setting.

e) After exiting from Slave operation the unit's parameters will be set to:

*Programmed Voltage to zero
*Programmed Current to zero
*UVL to zero volts
*OVP to its maximum value
*AST OFF
*OUT OFF
*Foldback protection OFF
*Locked Front Panel

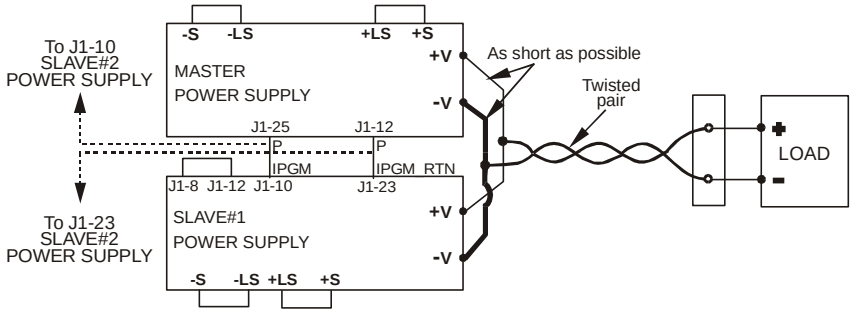

Fig.5-4: Parallel connection with local sensing

CAUTION Make sure that the connection between –V terminals is reliable to avoid disconnection during operation. Disconnection may cause damage to the power supply.

NOTE

With local sensing it is important to minimize the wire length and resistance. Also the positive and negative wire resistance should be close as possible to each other to achieve current balance between power supplies

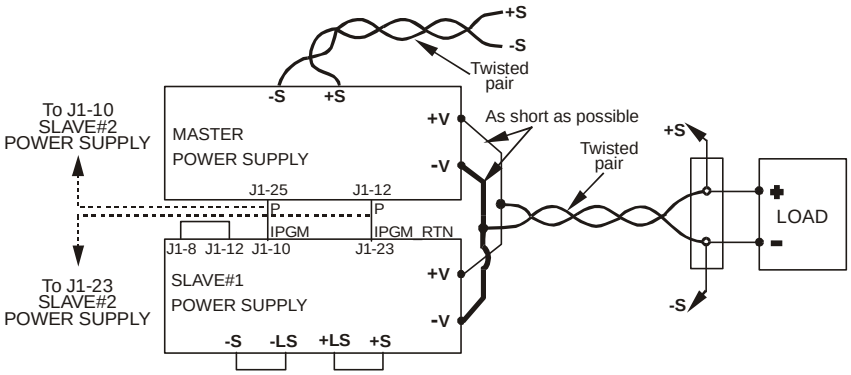

Fig.5-5: Parallel operation with Remote sensing

5.16 DAISY-CHAIN CONNECTION

It is possible to configure a multiple power supply system to shut down all the units when a fault condition occurs in one of the units. When the fault is removed, the system recovers according to its setting to Safe-start or Auto-restart mode.

Setup switch SW1, position 5 should be set to its DOWN position to enable the Daisy-chain operation. Other SW1 positions can be set according to the application requirements.

If a fault occurs in one of the units, its PS_OK signal will be set to a low level and the display will indicate the fault. The other units will shut off and their display will indicate “SO”. When the fault condition is removed, the units will recover to their last setting according to their Safe-start or Auto-restart setting.

Fig.5-6 shows connection of three units, however the same connection method applies to systems with a larger number of units.

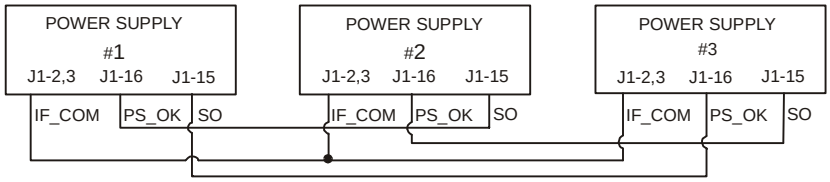

Fig.5-6: Daisy-chain connection

5.17 FRONT PANEL LOCKING

The front panel controls can be locked to protect from accidental power supply parameter change. Press and hold the PREV button to toggle between “Locked front panel’ and “Unlocked front panel”. The display will cycle between “LFP” and “UFP”. Releasing the PREV button while one of the modes is displayed, selects that mode.

5.17.1 Unlocked front panel

In this mode, the front panel controls are Enabled to program and monitor the power supply parameters.

5.17.2 Locked front panel

In this mode the following front panel controls are Disabled:

-VOLTAGE and CURRENT encoders.
-FOLD button.
-OUT button

The power supply will not respond to attempts to use these controls. The VOLT display will show “LFP” to indicate that the front panel is locked.

OVP/ UVL button is active to preview the OVP and UVL setting.

Use the PREV button to preview the Output Voltage and Current setting or to unlock the front panel.

CHAPTER 6 REMOTE ANALOG PROGRAMMING

6.1 INTRODUCTION

The rear panel connector J1 allows the user to program the power supply Output Voltage and Current with an analog device. J1 also provides monitoring signals for Output Voltage and Output Current. The programming range and monitoring signals range can be selected between 0-5V or 0-10V using the setup switch SW1. When the power supply is in Remote Analog programming, the serial communication port is active and can be used to read the power supply parameters.

CAUTION

COM (J1-12), VPGM_RTN (J1-22) terminals are connected AND IPGM_RTN (J1-23) terminal of J1 is referenced internally to the -Vout potential (-V). Do not connect these terminals to any potential other than -Vout (-V), as it may damage the power supply.

6.2 LOCAL/REMOTE ANALOG CONTROL

Contact 8 of J1 (Fig.4-2, Item 5) accepts TTL signal or Open-Short contact (referenced to J1-12) to select between Local or Remote Analog programming of the Output Voltage and Current.
In Local mode, the Output Voltage and Output Current can be programmed via the front panel VOLTAGE and CURRENT encoders or via the RS232/RS485 port. In Remote Analog mode, the Output Voltage and current can be programmed by analog voltage or by programming resistors via J1 contacts 9 and 10 (refer to Sections 6.4 and 6.5). Refer to Table 6-1 for Local/Remote Analog control (J1-8) function and Setup switch SW1-1, 2 settings.

SW1-1, 2 setting	J1-8 function	Output Voltage/ Current setting
Down (default)	No effect	Local
Up	“0” or Short	Remote Analog
	“1” or Open	Local

Table 6-1: Local/Remote Analog control function

6.3 LOCAL/REMOTE ANALOG INDICATION

Contact 21 of J1 (Fig. 4-2, Item 5) is an open collector output that indicates if the power supply is in Local mode or in Remote Analog mode. To use this output, connect a pull-up resistor to a voltage source of 30Vdc maximum. Choose the pull-up resistor so that the sink current will be less than 5mA when the output is in a low state. Refer to table 6-2 for J1-21 function.

J1-8	SW1-1	SW1-2	J1-21 signal
TTL “0” or short	Down	Down	Open
	Down	Up	0~0.6V
	Up	Down	0~0.6V
	Up	Up	0~0.6V
TTL “1” or open	Down or Up	Down or Up	Open

Table 6-2: Local/Remote Analog indication

6.4 REMOTE VOLTAGE PROGRAMMING OF OUTPUT VOLTAGE AND CURRENT LIMIT

CAUTION

To maintain the power supply isolation and to prevent ground loops, use an isolated programming source when operating the power supply via remote analog programming at the J1 connector.

Perform the following procedure to set the power supply to Remote Voltage programming:

1. Turn the power supply AC On/Off switch to Off.
2. Set setup switch SW1-1 to its UP position for output voltage external programming and SW1-2 to its UP position for output current.
3. Set SW1, position 3 to select the programming voltage range according to Table 6-3.
4. Ensure that SW1, positions 7 and 8 are at their DOWN (default) position.
5. Connect a wire jumper between J1-8 and J1-12 (refer to Table 4-4).
6. Connect the programming source to the mating plug of J1 as shown in Fig.6-1. Observe correct polarity for the voltage source.
7. Set the programming sources to the desired levels and turn the power supply ON. Adjust the programming sources to change the power supply output.

NOTES:

1. SW1, positions, 4, 5, 6 and 9 are not required for remote programming. Their settings can be determined according the application.
2. The control circuits allow the user to set the Output Voltage and Output Current up to 5% over the model-rated maximum value. The power supply will operate within the extended range, however it is not recommended to operate the power supply over its voltage and current rating, and performance is not guaranteed.

SW1-3 setting	Output Voltage programming VPGM (J1-9)	Output Current programming IPGM (J1-10)
UP	0-10V	0-10V
DOWN	0-5V	0-5V

Table 6-3: SW1-3 setting and programming range

J1 connector, rear panel view

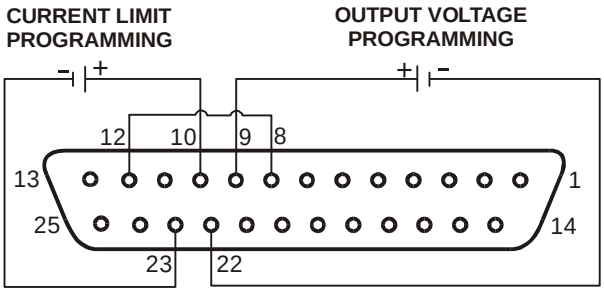

Fig.6-1: Remote voltage programming connection

6.5 RESISITIVE PROGRAMMING OF OUTPUT VOLTAGE AND CURRENT LIMIT

For resistive programming, internal current sources, for Output Voltage and/or Output Current control, supply 1mA current through external programming resistors connected between J1-9 & 22 and J1-10 & 23. The voltage across the programming resistors is used as a programming voltage for the power supply. Resistance of 0~5Kohm or 0~10Kohm can be selected to program the output voltage and output current from zero to full scale.
A variable resistor can control the output over its entire range, or a combination of variable resistor and series/parallel resistors can control the output over restricted portion of its range.

Perform the following procedure to set the power supply to Resistive programming:

1. Turn the AC On/Off switch to Off.
2. Set setup switch SW1-1 to its UP position for output voltage external programming and SW1-2 to its UP position for Output Current limit external programming.
3. Set SW1, position 3 to select the programming resistor range according to Table 6-4.
4. Set SW1-7 to its UP position for output voltage resistive programming and SW1-8 to its UP position for Output Current limit resistive programming.
5. Connect a short between J1-8, J1-12 and J1-23 (refer to Table 4-4).
6. Connect the programming resistors to the mating plug of J1 as shown in Fig.6-2.
7. Set the programming resistors to the desired resistance and turn the power supply ON. Adjust the resistors to change the power supply output.

NOTES:

1. SW1, positions 4, 5, 6 and 9 are not required for remote programming. Their settings can be determined according to the application requirements.
2. The control circuits allow the user to set the Output Voltage and Output Current up to 5% over the model-rated maximum value. The power supply will operate within the extended range, however it is not recommended to operate the power supply over its voltage and current rating and performance is not guaranteed.
3. To maintain the temperature stability specification of the power supply, the resistors used for programming should be stable and low noise resistors, with temperature coefficient of less than 50ppm.
4. When resistive programming is used, front panel and computer control (via serial communication port) of Output Voltage and Current are disabled.

SW1-3 setting	Output Voltage programming VPGM (J1-9)	Output Current programming IPGM (J1-10)
UP	0-10Kohm	0-10Kohm
DOWN	0-5Kohm	0-5Kohm

Table 6-4: SW1-3 setting and programming range

J1 connector, rear panel view

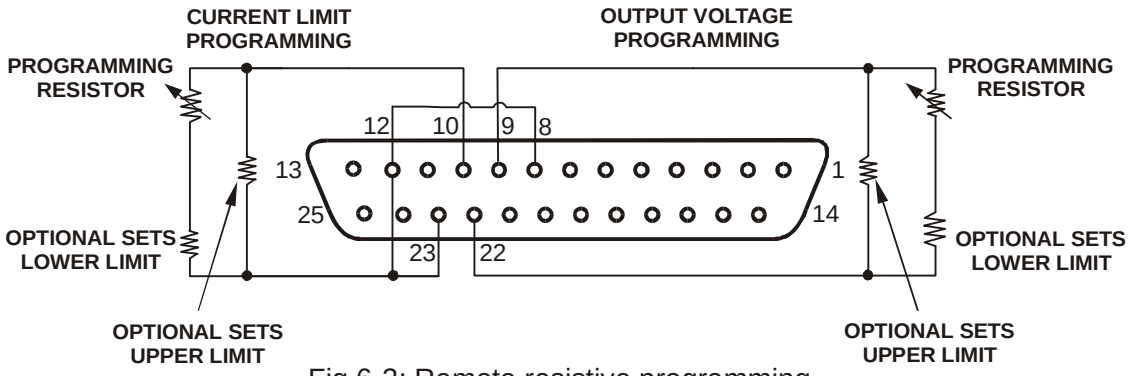

Fig.6-2: Remote resistive programming

6.6 REMOTE MONITORING OF OUTPUT VOLTAGE AND CURRENT

The J1 connector, located on the rear panel provides analog signals for monitoring the Output Voltage and Output Current. Selection of the voltage range between 0-5V or 0-10V is made by setup switch SW1-4. The monitoring signals represent 0 to 100% of the power supply Output Voltage and Output Current. The monitor outputs have 500 ohm series output resistance. Ensure that the sensing circuit has an input resistance of greater than 500 Kohm or accuracy will be reduced.
Refer to Table 6-5 for the required J1 connection, SW1-4 setting and monitoring voltage range.

Signal name	Signal function	J1 connection		Range	SW1-4
		Signal (+)	Return (-)		
VMON	Vout monitor	J1-11	J1-12	0-5V	Down
IMON	Iout monitor	J1-24			
VMON	Vout monitor	J1-11	J1-12	0-10V	Up
IMON	Iout monitor	J1-24			

Table 6-5 Monitoring signals setting

Notes:

1. Radiated emissions, FCC requirements: FCC requirements for radiated emissions; use shielded cable for the analog control signals. If using unshielded cable, attach an EMI ferrite suppressor to the cable, as close as possible to the power supply.

2. Front panel encoders operation: In Remote analog mode, the output voltage and current can't be set by the VOLTAGE and CURRENT encoders.

3. Front panel PREV button: Use the PREV button to display the Output Voltage and Current setting defined by the encoders or communication.

4. Communication: In Remote analog mode, all power supply parameters can be programmed and readback via the communication port, except the Output Voltage and Current setting.

CHAPTER 7 RS232 & RS485 REMOTE CONTROL

7.1 INTRODUCTION

This Chapter describes the operation of the Genesys™ 5000W power supplies via the serial communication port. Details of the initial set-up, operation via RS232 or RS485, the command set and the communication protocol are described in this Chapter.

7.2 CONFIGURATION

7.2.1 Default setting

The power supply is shipped with the following settings:

-Address	6	-Output	Off
-Baud-rate	9600	-Start up mode	Safe-start
-RS232/485	RS232	-OVP	Maximum
-Vout setting	0	-UVL	0
-Iout setting	Maximum	-Foldback	Off
-Master/Slave	H1 (Master)	-Front panel:	Unlocked (UFP)

7.2.2 Address setting

The power supply address can be set to any address between 0 and 30. Follow the instructions described below to set the unit address.

1. If the unit is in Remote mode (front panel REM/LOC LED illuminated), press the REM/LOC button to put the unit into Local mode.
2. Press and hold for the REM/LOC button for approximately 3 sec. The VOLTAGE display will indicate the unit address.
3. Using the VOLTAGE adjust encoder, select the unit address.

To preview the power supply address at any time, press and hold the REM/LOC button for approx. 3 sec. The VOLTAGE display will indicate the power supply address.

7.2.3 RS232 or RS485 selection

To select between RS232 or RS485 set the rear panel setup switch SW1-6 position to:
-DOWN for RS232
-UP for RS485

7.2.4 Baud Rate setting

Five optional Baud rates are possible: 1200, 2400, 4800, 9600 and 19200. To select the desired rate, the following steps should be taken:

1. If the unit is in Remote mode (front panel REM/LOC LED illuminates), press REM/LOC button to put the unit into Local mode.
2. Press and hold the REM/LOC button for approximately 3 sec. The CURRENT display will show the unit Baud Rate.
3. Using the CURRENT adjust encoder, select the desired Baud Rate.

7.2.5 Setting the unit into Remote or Local mode

1. The unit will be put into Remote mode only via serial communication command. Commands that will put the unit into Remote mode are:

   RST PV n
   OUT n PC n
   RMT n
   (for n values see Tables 7-5 and 7-6)

2. There are two Remote modes:
   1. Remote: In this mode, return to local can be made by the front panel REM/LOC or via serial port command RMT 0. Set the unit into Remote mode via serial port RMT 1 command.

   2. Local Lockout: In this mode the unit can be returned to Remote mode via the serial port RMT 1 command or by turning off the AC power until the display turns off, and then turn it to on again. In local Lockout mode, the front panel REM/LOC button is not active. Set the unit into Local Lockout mode via serial port RMT 2 command.

7.2.6 RS232/RS485 port in Local mode

When the power supply is in Local mode, it can receive queries or commands. If a query is received, the power supply will reply and remain in Local mode. If a command that affects the output is received, the power supply will perform the command and change to Remote mode.
Serial commands may be sent to set the status registers and read them while the unit is in Local mode. If the Enable registers are set (refer to Section 7.11) the power supply will transmit SRQ's while in Local.

7.2.7 Front panel in Remote mode

Front panel control in Remote mode is Disabled except for:

1. PREV: use to preview the Voltage and Current setting.
2. OVP/UVL: use to preview the OVP/UVL setting.
3. LOC/REM: use to set the unit into Local mode.

In Local Lockout mode, only the PREV and OVP/UVL pushbuttons are active.

7.3 REAR PANEL RS232/RS485 CONNECTOR

The RS232/RS485 interface is accessible through the rear panel RS232/RS485 IN and RS485 OUT connectors. The connectors are 8 contact RJ-45. The IN and OUT connectors are used to connect power supplies in a RS232 or RS485 chain to a controller. Refer to Fig. 7-1 for IN/OUT connectors.

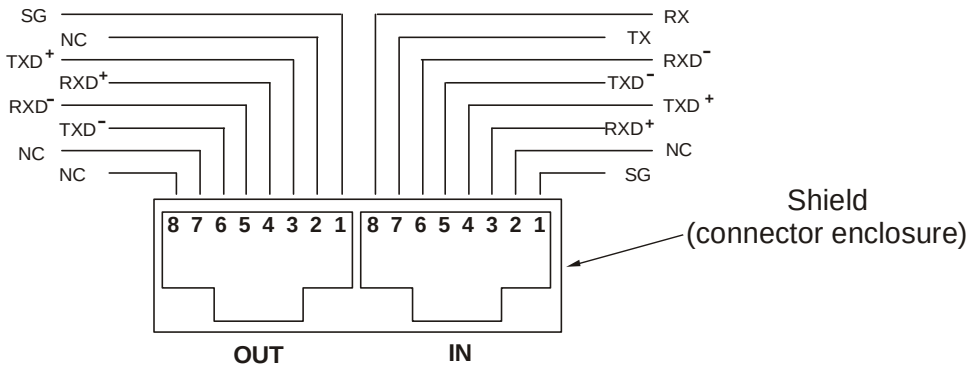

Fig.7-1: Rear panel J3 IN/OUT connectors pinout

NOTE

Tx and Rx are used for RS232 communication. Txd +/- and Rxd +/- are used for RS485 communication. Refer to RS-232 and RS-485 cabling and connection details.

7.4 MD MODE OPTION (Factory Installed)

7.4.1 MD Mode Description

The GEN supply is capable of operating in a multi drop environment - more than 1 supply conducting serial communications on a single serial bus. A maximum of 31 GEN supplies can operate in this single bus. Upon power up the Gen will enter the point-to-point mode in which it is assumed that only 1 supply will operate on a serial bus. MD Mode must be enabled - Ref. Section 7.10.2.2. The user must set all Slave supplies to a unique address. No two supplies may have the same address.

7.4.2 MD Mode enable – Serial communication mode

Refer to section 7.10.2.2. MD Mode is entered into via a Single byte command. In MD Mode the Master supply shall operate in one of the two serial modes, RS232 or RS485, depending upon the rear panel DIP switch setting and the Slave supplies shall operate in the RS485 serial mode.

7.4.3 MD Mode SRQ

In MD Mode the SRQ generated by the supply is replaced by a single byte SRQ sent two times in sequence. The SRQ byte, in binary, will contain the address of the supply in the least significant 5 bits with bits 5 and 6 set to logic zero and bit 7 set to logic 1. Ref. Table 7-4.

7.4.4 Communication Collisions

In MD Mode it is possible to have one supply issue an SRQ while another supply is transmitting data/response to a command. When this happens, the HOST PC will receive garbled data and assume that the data/response was corrupted and thus re-send the command - the SRQ will probably be lost. The method of recovery will be SRQ retransmission, Ref. Section 7.4.5, or polling all attached supplies to see who issued the SRQ - available by reading the SEVE? Register.

7.4.5 MD Mode SRQ Retransmission

The supply can be commanded to retransmit the SRQ at regular intervals until it is answered to by the HOST PC (Ref. Section 7.10.2.4). The retransmission interval is 10 ms plus the supply address multiplied by 20 ms.

7.5 CONNECTING POWER SUPPLIES TO RS232 OR RS485 BUS

7.5.1 Single power supply

1. Select the desired interface RS232 or RS485 using rear panel setup switch SW1-6 (Section 4-4).
   -RS232: DOWN position
   -RS485: UP position
2. Connect rear panel IN connector to the controller RS232 or RS485 port using a suitable shielded cable. Refer to Figures 7-2, 7-3 and 7-4 for available RS232 and RS485 cables.

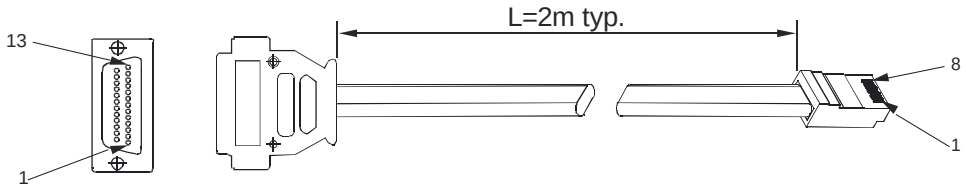

DB-25 CONNECTOR		8 PIN CONNECTOR		REMARKS
PIN NO.	NAME	PIN NO.	NAME	
1	SHIELD		SHIELD	
2	TX	8	RX	TWISTED PAIR
3	RX	7	TX	
7	SG	1	SG	

Fig.7-2: RS232 cable with DB25 connector (P/N: GEN/232-25)

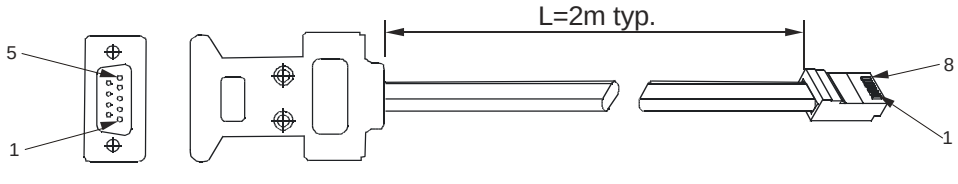

DB-9 CONNECTOR		8 PIN CONNECTOR		REMARKS
PIN NO.	NAME	PIN NO.	NAME	
HOUSING	SHIELD	HOUSING	SHIELD	
2	RX	7	TX	TWISTED PAIR
3	TX	8	RX	
5	SG	1	SG	

Fig.7-3: RS232 cable with DB9 connector (P/N: GEN/232-9)

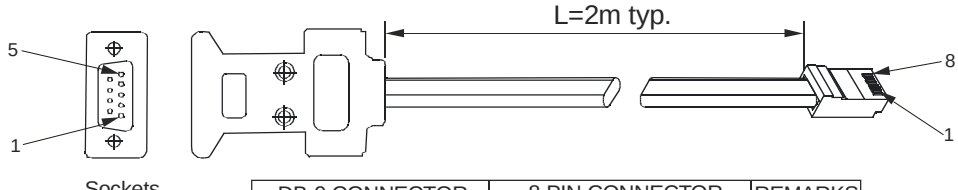

DB-9 CONNECTOR		8 PIN CONNECTOR		REMARKS
PIN NO.	NAME	PIN NO.	NAME	
HOUSING	SHIELD	HOUSING	SHIELD	
9	TXD −	6	RXD −	TWISTED PAIR
8	TXD +	3	RXD+	
1	SG	1	SG	
5	RXD −	5	TXD −	TWISTED PAIR
4	RXD +	4	TXD +	

Fig.7-4: RS485 cable with DB9 connector (P/N: GEN/485-9)

7.5.2 Multi power supply connection to RS232 or RS485 bus

Up to 31 units can be connected (daisy chained) to the RS232 or RS485 bus. The first unit connects to the controller via RS232 or RS485 and the other units are connected via the RS485 bus.

1. First unit connection: Refer to Section 7.5.1 for connecting the first unit to the controller.
2. Other units connection: The other units on the bus are connected via their RS485 interface. Refer to Figure 7-5 for typical connection.
   - Set rear panel setup switch SW1-6 to its UP position.
   - Using the Linking cable supplied with each unit (refer to Fig. 7-6), connect each unit OUT connector to the next unit IN connector.

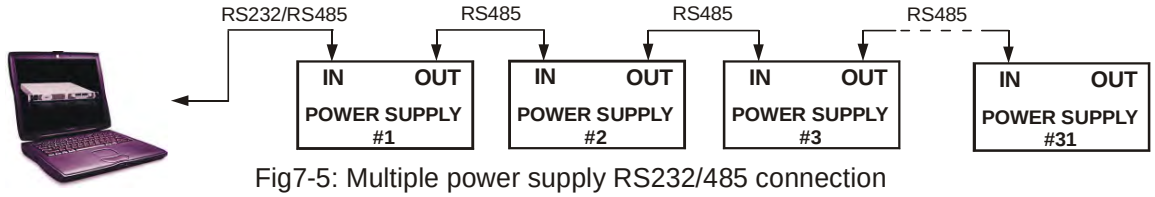

Fig7-5: Multiple power supply RS232/485 connection

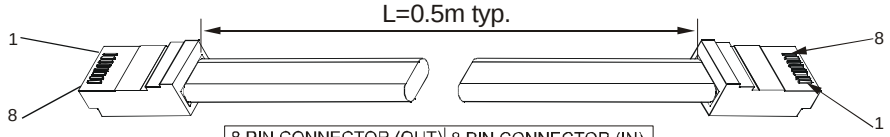

8 PIN CONNECTOR (OUT)		8 PIN CONNECTOR (IN)	
PIN NO.	NAME	PIN NO.	NAME
HOUSING	SHIELD	HOUSING	SHIELD
1	SG	1	SG
6	TXD −	6	RXD −
3	TXD +	3	RXD +
5	RXD −	5	TXD −
4	RXD +	4	TXD +

Fig.7-6: Serial link cable with RJ-45 shielded connectors (P/N: GEN/RJ-45)

7.6 COMMUNICATION INTERFACE PROTOCOL

> **NOTE**
> The address (ADR n) command must return an “OK” response before any other commands are accepted.

7.6.1 Data format

Serial data format is 8 bit, one start bit and one stop bit. No parity bit.

7.6.2 Addressing

The Address is sent separately from the command. It is recommended to add 100msec delay between query or sent command to next unit addressing. Refer to Section 7.8.3 for details.

7.6.3 End of Message

The end of message is the Carriage Return character (ASCII 13). The power supply ignores the Line Feed (ASCII 10) character.

7.6.4 Command Repeat

The backslash character “\” will cause the last command to be repeated.

7.6.5 Checksum

The user may add a checksum (optional) to the end of the command. The checksum is “$” followed by two hex characters. If a command or a query has a checksum, the response will also have one. There is no CR between the command string and the “$” sign.

Example: STT?3A
STAT?$7B

7.6.6 Acknowledge

The power supply acknowledges received commands by returning an “OK” message. If an error is detected the power supply will return an error message. The rules of checksum also apply to the acknowledge.

7.6.7 Error message

If an error is detected in command or query, the power supply will respond with an error message. Refer to Section 7.7 for details.

7.6.8 Backspace

The backspace character (ASCII 8) clears the last character sent to the power supply.

7.7 ERROR MESSAGES

The power supply will return error messages for illegal commands and illegal programming parameters. Refer to Table 7-1 for programming error messages and Table 7-2 for command error messages.

Table 7-1: Programming error messages

Error Code	Description
E01	Returned when program voltage (PV) is programmed above acceptable range. Example: PV above '105% of supply rating' or PV above 95% of OVP setting'.
E02	Returned when programming output voltage below UVL setting.
E04	Returned when OVP is programmed below acceptable range. Example: OVP less than 5% of supply voltage rating' plus 'voltage setting'.
E06	Returned when UVL is programmed above the programmed output voltage.
E07	Returned when programming the Output to ON during a fault shut down.

Table 7-2: Commands error messages

Error Code	Description
C01	Illegal command or query
C02	Missing parameter
C03	Illegal parameter
C04	Checksum error
C05	Setting out of range

7.8 COMMAND SET DESCRIPTION

7.8.1 General guide

1. Any command or argument may be in capital letters or small letters.
2. In commands with an argument, a space must be between the command and the argument.
3. For any command that sets a numeric value, the value may be up to 12 characters long.
4. Carriage Return: If the CR character (ASCII 13) is received by itself, the power supply will respond with "OK" and CR.

7.8.2 Command set categories

The Genesys™ 5000W series command set is divided into four categories as follows:

1. Initialization control
2. ID control
3. Output control
4. Status control

7.8.3 Initialization Control Commands

#	Command	Description
1	ADR n	ADR is followed by address, which can be 0 to 30 and is used to access the power supply.
2	CLS	Clear status. Sets FEVE and SEVE registers to zero (refer to Section 7-11).
3	RST	Reset command. Brings the power supply to a safe and known state: Output voltage: zero, Remote: non-lockout remote, Output current: zero, Auto-start: Off, Output: Off, OVP: maximum, FOLD: Off, UVL: zero The conditional registers (FLT and STAT) are updated, the other registers are not changed.
4	RMT	Sets the power supply to local or remote mode: 1. RMT 0 or RMT LOC, sets the power supply into Local mode. 2. RMT 1 or RMT REM, sets the unit into remote mode. 3. RMT 2 or RMT LLO, sets the unit into Local Lockout mode (latched remote mode).
5	RMT?	Returns to the Remote mode setting: 1. “LOC” - The unit is in Local mode. 2. “REM” - The unit is in Remote mode. 3. “LLO” - The unit is in Local Lockout (latched remote) mode.
6	MDAV?	Returns MD MODE OPTION Status. 1 indicates installed and 0 indicates not installed.
7	\	Repeat last command. If \<CR> is received, the power supply will repeat the last command.

7.8.4 ID Control Commands

#	Command	Description
1	IDN?	Returns the power supply model identification as an ASCII string:LAMBDA, GENX-Y
2	REV?	Returns the software version as an ASCII string.
3	SN?	Returns the unit serial number. Up to 12 characters.
4	DATE?	Returns date of last test. Date format: yyyy/mm/dd

7.8.5 Output Control Commands

#	Command	Description
1	PV n	Sets the output voltage value in Volts. The range of voltage value is described in Table 7-5. The maximum number of characters is 12. See the following examples for PV n format: PV 12, PV 012, PV 12.0, PV 012.00, etc…
2	PV?	Reads the output voltage setting. Returns the string “n” where “n” is the exact string sent in the PV n command. When in Local mode, returns the PREVIEW (front panel) settings in a 5 digit string.
3	MV?	Reads the actual output voltage. Returns a 5 digits string. Example: 60V supply sends 01.150, 15.012, 50.000, etc…
4	PC n (See Note 1)	Set the Output Current value in Amperes. The range of current values is described in Table 7.6. The maximum number of characters is 12. See the following examples for PC n format: PC n format: PC 10, PC 10.0, PC 010.00, etc…
5	PC?	Reads the Output Current setting. Returns the string “n” where “n” is the exact string sent in the PC n command. When in Local mode, returns the PREVIEW (front panel) settings in a 5 digit string.
6	MC? (See Note 2)	Reads the actual Output Current. Returns a 5 digit string. Example: 200A supply sends 000.50, 110.12, 200.00, etc…

#	Command	Description
7	DVC?	Display Voltage and Current data. Data will be returned as a string of ASCII characters. A comma will separate the different fields. The fields, in order, are: Measured Voltage, Programmed Voltage, Measured Current, Programmed Current, Over Voltage Set Point and Under Voltage Set Point. Example: 5.9999,6.0000,010.02,010.00,7.500,0.000
8	FILTER nn	Set the low pass filter frequency of the A to D Converter for Voltage and Current Measurement where nn = 18, 23 or 46.
9	FILTER?	Returns the A to D Converter filter frequency: 18,23 or 46 Hz.
10	OUT n	Turns the output to ON or OFF. Recover from Safe-Start, OVP or FLD fault. OUT 1 (or OUT ON)-Turn On. OUT 0 (or OUT OFF)-Turn Off
11	OUT?	Returns the output On/Off status string. ON - output On. OFF - output Off.
12	FLD n	Sets the Foldback protection to ON or OFF. FLD 1 (or FOLD ON) - Arms the Foldback protection FLD 0 (or FOLD OFF) - Cancels the Foldback protection. When the Foldback protection has been activated, OUT 1 command will release the protection and re-arm it, while FLD 0 will cancel the protection.
13	FLD?	Returns the Foldback protection status string: “ON” - Foldback is armed. “OFF” - Foldback is cancelled.
14	FBD nn	Add (nn x 0.1) seconds to the Fold Back Delay. This delay is in addition to the standard delay. The range of nn is 0 to 255. The value is stored in eprom at AC power down and recovered at AC power up.
15	FBD ?	Supply returns the value of the added Fold Back Delay.
16	FBDRST	Reset the added Fold Back Delay to zero.
17	OVP n	Sets the OVP level. The OVP setting range is given in Table 7-7. The number of characters after OVP is up to 12. The minimum setting level is approximately 105% of the Output Voltage setting, or the value in Table 7-7, whichever is higher. The maximum OVP setting level is shown in Table 5-1. Attempting to program the OVP below this level will result in an execution error response (“E04”). The OVP setting stays unchanged.
18	OVP?	Returns the setting “n” where “n” is the exact string in the user’s “OVP n”. When in Local mode, returns the last setting from the front panel in a 4 digit string.
19	OVM	Sets OVP level to the maximum level. Refer to Table 7-7.
20	UVL n	Sets Under Voltage Limit. Value of “n” may be equal to PV setting, but returns “E06” if higher. Refer to Table 7-8 for UVL programming range.
21	UVL?	Returns the setting “n” where “n” is the exact string in the user’s “UVL n”. When in Local mode, returns the last setting from the front panel in a 4 digit string.
22	AST n	Sets the Auto-restart mode to ON or OFF. AST 1 (or AST ON): Auto restart On. AST 0 (or AST OFF): Auto restart Off.
23	AST?	Returns the string auto-restart mode status.
24	SAV	Saves present settings. The settings are the same as power-down last setting. These settings are erased when the supply power is switched Off and the new “last settings” are saved.
25	RCL	Recalls last settings. Settings are from the last power-down or from the last “SAV” command.

26	MODE?	Returns the power supply operation mode. When the power supply is On (OUT 1) it will return “CV” or “CC”. When the power supply is OFF (OUT 0 or fault shutdown) it will return “OFF”.
27	MS?	Returns the Master/Slave setting. Master: n= 1, 2, 3, or 4 Slave: n=0

NOTES:
1. In Advanced parallel mode (refer to Sec. 5.15.2), “n” is the total system current.
2. In Advanced parallel mode, “MC?” returns the Master unit current multiplied by the number of slave units +1.

7.9 GLOBAL OUTPUT COMMANDS

7.9.1 GENERAL

All supplies, even if not the currently addressed supply, receiving a global comm. and will execute the command. No response to the PC issuing the command will be returned to the PC. The PC issuing the command will be responsible to delay and any other communications until the command is execute. 200 Ms minimum is the suggested delay.
If the command contains an error, out of range values for example, no error report will be sent to the issuing PC.

Table 7-3

1.	GRST	Reset. Brings the power supply to a safe and known state: Output voltage: 0V, output current: 0A, OUT: Off, Remote: RMT 1, AST: Off OVP: Max, UVL: 0. The conditional register (FLT and STAT) are updated. Other registers are *not* changed. Non-Latching faults (FB, OVP, SO) are cleared, OUT fault stays
2.	GPV n	Sets the output voltage value in volts. The range of voltage values is shown in Table 7-5. ‘n’ may be up to 12 char plus dec. pt
3.	GPC n	Program the output current value in amperes. The range of current values is shown in Table 7-6. ‘n’ may be up to 12 char plus dec. pt
4.	GOUT	Turns the output to ON or OFF: “OUT 1/ON” = turn on “OUT 0/OFF” = turnoff, clears CV and CC bits in the Status Condition (STAT). OUT ON will respond with “E07’ if the output cannot be turned on because of a latching fault (OTP< AC, ENA, SO) shutdown.
5.	GSAV	Save present settings. Same settings as power-down last settings listed in Error! Reference source not found. Except the address and Baud rate are not saved Saves to the RAM. These settings are erased when the supply power is switched off and the new ‘last settings’ are saved.
6.	GRCL	Recall last settings. Settings are from last power-down or from last ‘SAV’ or ‘GSAV’ command. Address and Baud rate are not recalled so communication is not interrupted.

7.10 SINGLE BYTE COMMANDS

7.10.1 General

Single byte commands are commands in which all the necessary data for the supply to act upon is contained in a single byte. Single byte commands will be executed immediately by the supply. If the command requires data to be sent to the HOST PC or IEEE Board (see sections 7.10.4 and 7.10.3.1) that response will be transmitted immediately with no delay due to any software overhead. With the exception of the Disconnect from communications command, section 7.10.3.1, commands must be sent by the HOST PC or IEEE Board 2 times in sequence for verification. All have the most significant bit, D7, set to a logic 1. A CR, carriage return, character is not included in a single byte command. The RST command will not change any setting made by a single byte command.
All Single Byte commands will be executed in 1 ms or less. This does not include any response sent to the HOST/IEEE Board, which is dependent upon the response length and the serial transmission speed (Baud rate).

7.10.2 Global commands without response

7.10.2.1 Disable MD Mode (MD MODE OPTION REQUIRED)

Disable is the default condition upon power up. The Hex value of the command is 0xA0. Send it two times in sequence. All supplies, both the currently addressed supply and all non-addressed supplies, will disable MD Mode as a result of this command.

7.10.2.2 Enable MD Mode (MD MODE OPTION REQUIRED)

Send to enable Multi Drop Mode. The Hex value of the command is 0xA1. Send it two times in sequence. When this command is sent, the supply will set SRQ retransmission to the disable state; if you wish it to be enabled you must send the enable command. All supplies, both the currently addressed supply and all non-addressed supplies, will enable MD Mode as a result of this command.

7.10.2.3 Disable SRQ retransmission (MD MODE OPTION REQUIRED)

Disable is the default condition upon power up. The Hex value of the command is 0xA2. Send it two times in sequence. If the supply sends an SRQ it will only sent it 1 time. All supplies, both the currently addressed supply and all non-addressed supplies, will disable SRQ retransmission as a result of this command. All status registers will retain their data when this command is sent.

7.10.2.4 Enable SRQ retransmission (MD MODE OPTION REQUIRED)

Enable retransmission of SRQs. This is only available when the Multi Drop Mode is enabled in the supply. The Hex value of the command is 0xA3. Send it two times in sequence. If the supply sends an SRQ it will be repeated on a timely basis, 10 ms plus 20 ms times the supply address, until answered. All supplies, both the currently addressed supply and all non-addressed supplies, will enable SRQ retransmission as a result of this command.

7.10.2.5 Enable FLT Bit in the SENA Register

The Hex value of the command is 0xA4. Send it two times in sequence.

7.10.3 Global commands with response

7.10.3.1 Disconnect from communications

Command the supply to end all data transmissions to the HOST PC/IEEE Board and cease its role as the active addressed supply. The HOST PC/IEEE Board will be required to re-send the ‘ADR nn’ command to reestablish communications with the supply. After receiving the first command the supply will respond with an OK<CR>. The Hex value of the command is 0xBF. All supplies, both the currently

addressed supply and all non-addressed supplies, will respond to this command; but only the currently addressed supply (if any) will respond with the ‘OK’.

7.10.4 Addressed commands with response

7.10.4.1 Read registers

Send (0x80 + Address) (1 byte binary - send 2 times sequentially). The supply will return the contents of the Status Condition Register, the Status Enable Register, the Status Event Register (SEVE?), the Fault Condition Register, the Fault Enable Register and the Fault Event Register IFEVE/). All registers will be represented in two Hex bytes. Following the register data, a single dollar sign, $, will be added to signal the end of data and the start of a checksum. The checksum will be the sum of all register data and will be represented in two Hex bytes. The transmission will end with the CR character. If repetitive sending of SRQs was active and the supply was sending them, the supply will stop sending repetitive SRQs but leave the function active. The contents of the registers will not be destroyed. Note that the supply does not have to be the active addressed supply.
Note that this command will not execute if another command is being processed.

7.10.4.2 Print Power On Time

Print the total time the supply has operated under AC power. Send 2 bytes in sequence, A6 Hex and the address of the supply in binary. A 32 bit integer will be returned in 8 Hex bytes. The data will be the number of minutes that power has been ‘ON’ in the supply in binary. A ‘$’ sign and 2 byte Hex checksum will be appended to the data. There is no method provided to reset this number.
Retransmit last message.
Send (0xC0 + Address) (1 byte binary - send 2 times sequentially). The supply will return the last message sent. Note that the supply does not have to be the active addressed supply.
This command will not execute if another command is being processed.
Note that Single byte commands do not load data into the supply’s data output buffer.
Thus this command will not cause the supply to retransmit data obtained from any previous Single Byte Command.

7.10.4.3 Retransmit Last Message

Send (0xC0 + Address) (1 byte binary - send 2 times sequentially). The supply will return the last message sent. Note that the supply does not have to be the active addressed supply.
This command will not execute if another command is being processed.
Note that Single byte commands do not load data into the supply’s data output buffer. Thus this command will not cause the supply to retransmit data obtained from any previous Single Byte Command.

7.10.4.4 Test if MD Mode is Installed

Send AA Hex followed by the address of the supply in binary. If not installed, the supply will return a ‘1’. If installed, the supply will return a ‘0’.

7.10.5 Addressed commands without response

7.10.5.1 Acknowledge SRQ

Send (0xE0 + Address) (1 byte binary - send 2 times sequentially). The supply will stop re-sending SRQ. If Enable SRQ retransmission is active, it will remain active.

7.10.5.2 Re-enable SRQ with out reading/clearing the SEVE Register

Send A5 Hex followed by the address of the supply in binary and new SRQ’s generated by new events in the Fault Event will be enabled without reading and clearing the Status Event Register. All events previously recorded in the Fault Event Register must have been serviced by the user’s software prior to this command to take affect.

Table 7-4. SINGLE BYTE COMMANDS

Name	Bit Positions	Response	Description
Global Commands			
Disable MD Mode	1010 0000	None	Set supplies out of MD Mode (default)
Enable MD Mode	1010 0001	None	Set supplies into MD Mode
Disable SRQ retransmission	1010 0010	None	Disable retransmission of SRQs by supplies (default)
Enable SRQ retransmission	1010 0011	None	Enable retransmission of SRQs by supplies
Enable FLT Bit	1010 0100	None	Enable the FLT bit in the SENA Register
Disconnect serial communications	1011 1111	OK	All supplies will halt transmission and enter the non-addressed state.
Addressed Commands			
Read Registers	100x xxxx	Register data	Non destructive read of all register. x xxxx is the address of the supply in binary.
Re-enable SRQ	Byte 1 1010 0101 Byte 2 xxxx xxxx	None	Re-enable SRQ without reading or clearing the SEVE Register. xxxx xxxx is the address of the supply in binary. Works only in MD Mode.
Print Power On Time	Byte 1 1010 0110 Byte 2 xxxx xxxx	Power On time in minutes	Read the time the supply is active under AC Power. xxxx xxxx is the address of the supply in binary. Returns a 32 Bit integer as 8 Hex bytes. A '$' sign is appended to the data followed by a 2 byte check-sum. A total of 11 bytes are returned.
Retransmit last message	110x xxxx	Last message	Retransmit last response from a command. x xxxx is the address of the supply in binary.
Acknowledge SRQ	111x xxxx	None	Acknowledge SRQ. If retransmission of SRQ is enabled, it will remain enabled for the next SRQ. X xxxx is the address of the supply in binary.
Test if MD Mode is Installed	Byte 1 1010 1010 Byte 2 xxxx xxxx	0 or 1	Returns a 0 if not installed or a 1 if installed. A '$' sign followed by a 2 bytes checksum and Carriage Return is appended to the data. xxxx xxxx is the address of the supply in binary.
Supply Initiated Communications			
SRQ	100x xxxx	N/A	SRQ from supply when in MD Mode. X xxxx is the address of the supply in binary.

Table 7-5: Voltage programming range

Model **Rated output Voltage (V)**	**Minimum** **(V)**	**Maximum** **(V)**
8	**0.000**	**8.000**
10	**00.000**	**10.000**
16	**00.000**	**16.000**
20	**00.000**	**20.000**
30	**00.000**	**30.000**
406080	**00.00000.000**	**40.00060.00080.00**
100	**00.00**	**100.00**
150	**00.000**	**150.00**
300	**000.00**	**300.00**
600	**000.00**	**600.00**
	000.00	

NOTE:

The power supply can accept values higher 5% than the table values, however it is not recommended to program the power supply beyond the rated values.

Table 7-6: Current programming range

Model	Minimum (A)	Maximum (A)
GEN8-600	000.00	600.00
GEN10-500	000.00	500.00
GEN16-310	000.00	310.00
GEN20-250	00.00	250.00
GEN30-170	00.00	170.00
GEN40-125	00.00	125.00
GEN60-85	00.000	85.00
GEN80-65	00.000	65.00
GEN100-50	00.000	50.00
GEN150-34	00.000	34.00
GEN300-17	0.000	17.00
GEN600-8.5	0.000	8.500

NOTE:

The power supply can accept values higher 5% than the table values, however it is not recommended to program the power supply over the rated values.

Table 7-7: OVP programming range

Model Rated Output Voltage (V)	Minimum (V)	Maximum (V)
8	0.5	10.0
10	0.5	12.0
16	1.0	19.0
20	1.0	24.0
30	2.0	36.0
40	2.0	44.0
60	5.0	66.0
80	5.0	88.0
100	5.0	110.0
150	5.0	165.0
300	5.0	330.0
600	5.0	660.0

Table 7-8: UVL programming range

Model Rated Output Voltage (V)	Minimum (V)	Maximum (V)
8	0	7.60
10	0	9.50
16	0	14.3
20	0	19.0
30	0	28.5
40	0	38.0
60	0	57.0
80	0	76.0
100	0	95.0
150	0	142
300	0	285
600	0	570

7.10.6 Status Control Commands

Refer to Section 7-8 for definition of the registers.

#	Command	Description
1	STT?	Reads the complete power supply status. Returns ASCII characters representing the following data, separated by commas: MV<actual (measured) voltage> PC<programmed (set) current> PV<programmed (set) voltage> SR<status register, 2-digit hex> MC<actual (measured) current> FR<fault register, 2-digit hex> Example response: MV(45.201),PV(45), MC(4.3257), PC(10), SR(30), FR(00)
2	FLT?	Reads Fault Conditional Register. Returns 2-digit hex.
3	FENA	Set Fault Enable Register using 2-digit hex.
4	FENA?	Reads Fault Enable Register. Returns 2-digit hex.
5	FEVE?	Reads Fault Event Register. Returns 2-digit hex. Clears bits of Fault Event Register.
6	STAT?	Reads Status Conditional Register. Returns 2-digit hex.
7	SENA	Sets Status Enable Register using 2-digit hex.
8	SENA?	Reads Status Enable Register. Returns 2-digit hex.
9	SEVE?	Reads Status Event register. Returns 2-digit hex. Clears bits of Status Event register.

7.11 STATUS, ERROR AND SRQ REGISTERS

7.11.1 General Description

This Section describes the various status error and SRQ registers structure. The registers can be read or set via the RS232/RS485 commands. When using the IEEE option, refer to the User's Manual for Genesys™ Power Supply IEEE Programming Interface.

Refer to Fig. 7-7 for the Status and Error Registers Diagram.

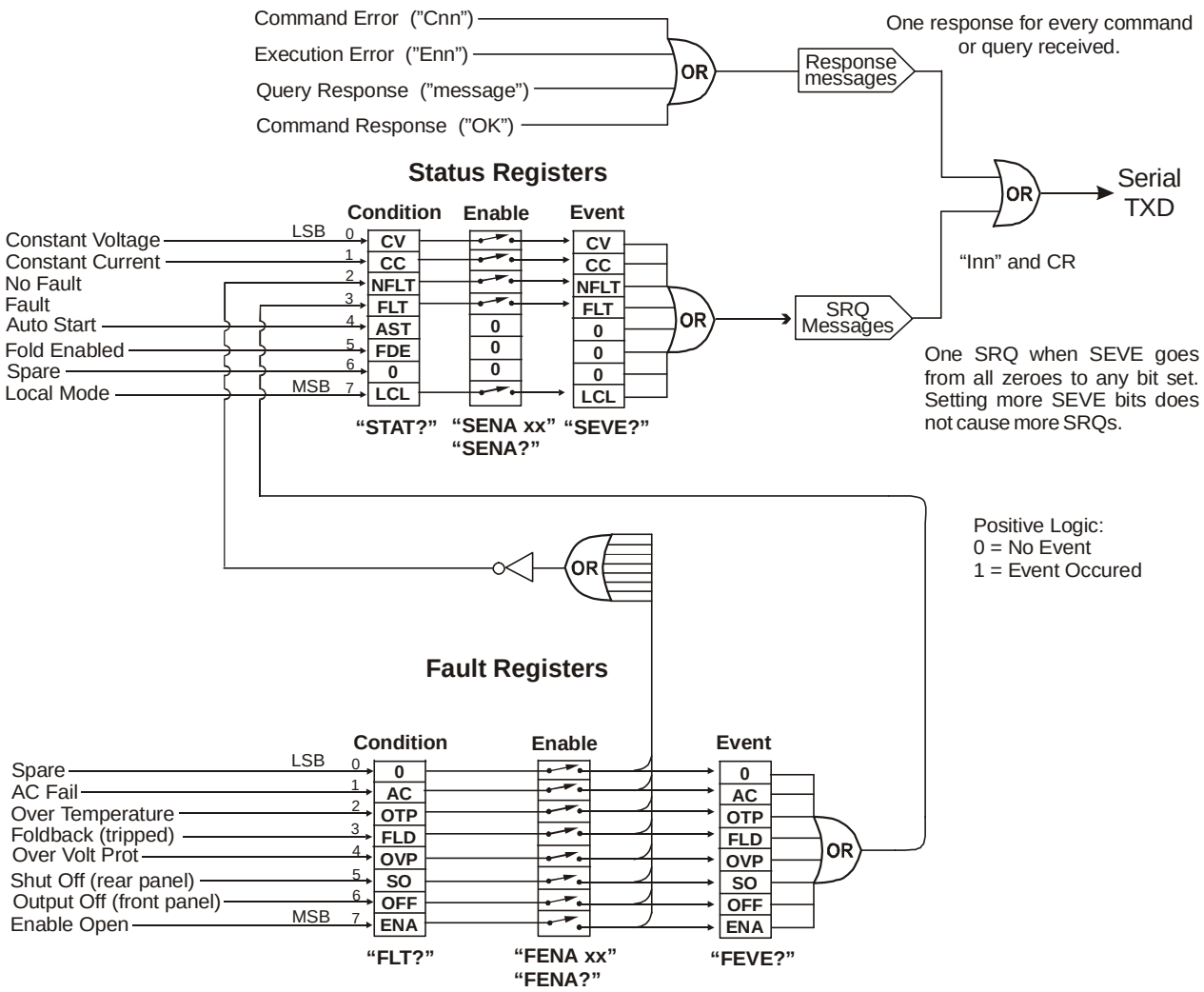

Fig.7-7: Status and Error Registers Diagram

7.11.2 Conditional Registers

The fault Condition Register and the Status Condition Register are read only registers that the user may read to see the condition of the Power supply. Refer to Table 7-9 for description of the Fault Condition Register bits and Table 7-10 for the Status Condition register bits.

7.11.2 Conditional Registers (continued)

Table 7-9: Fault Condition Register

BIT	Fault name	Fault symbol	Bit Set condition	Bit Reset condition
0 (LSB)	Spare bit	SPARE	Fixed to zero	Fixed to zero
1	AC Fail	AC	AC fail has occurred.	The AC input returns to normal.
2	Over temperature	OTP	OTP shutdown has occurred.	The power supply cools down.
3	Foldback	FOLD	Foldback shutdown has occurred	The supply output is turned On by front panel button or OUT 1 command.
4	Over voltage	OVP	OVP shutdown has occurred.	The supply output is turned ON by front panel button or OUT 1 command.
5	Shut Off	SO	Rear panel J1 “Shut Off” condition has occurred.	Rear panel J1 “Shut Off” condition has been removed.
6	Output Off	OFF	Front panel OUT button pressed to Off.	The supply output is turned On by front panel button or OUT 1 command.
7(MSB)	Enable	ENA	Rear panel J1 Enable terminal (J1-1&J1-14) opened.	Rear panel J1 Enable terminals closed.

Table 7-10: Status Condition Register

BIT	Fault name	Fault symbol	Bit Set condition	Bit Reset condition
0 (LSB)	Constant Voltage	CV	Output is On and the supply in CV.	Output is ON and the supply is not in CV.
1	Constant Current	CC	Output is ON and the supply in CC.	Output is ON and the supply is not in CC.
2	No Fault	NFLT	The power supply is operating normally or fault reporting is not enabled. See “OUT n” command in Section 7.7.5.	One or more faults are active and fault reporting is enabled (using “FENAxx”).
3	Fault active	FLT	One or more faults are enabled and occur.	Fault Event Register cleared (FEVE?).
4	Auto-Restart Enabled	AST	Supply is in Auto-Restart mode (from Front Panel or serial command).	Supply is in Safe-Start mode (from Front Panel or serial command).
5	Fold Enabled	FDE	Fold protection is enabled (from Front Panel or serial command).	Fold protection disabled (from Front Panel or serial command).
6	Spare bit	SPARE	Fixed to zero.	Fixed to zero.
7(MSB)	Local Mode	LCL	Supply in Local mode.	Supply in Remote mode or Local-Lockout mode.

7.11.3 Service Request: Enable and Event Registers

The conditional Registers are continuously monitored. When a change is detected in a register bit which is enabled, the power supply will generate an SRQ message.

The SRQ message is: “Inn” terminated by CR, where the nn is the power supply address. The SRQ will be generated either in Local or Remote mode.

Refer to Tables 7-11 to 7-14 for details of the Enable and Event registers.

1. Fault Enable Register

The Fault Enable Register is set to the enable faults SRQs.

Table 7-10: Fault Enable Register

BIT	Enable bit name	Fault symbol	Bit Set condition	Bit reset condition
0 (LSB)	Spare bit	SPARE	User command: “FENA nn” where nn is hexadecimal	User command: “FENA nn” where nn is hexadecimal (if nn=”00”, no fault SRQs will be generated).
1	AC Fail	AC		
2	Over Temperature	OTP		
3	Foldback	FOLD		
4	Over Voltage	OVP		
5	Shut Off	SO		
6	Output Off	OFF		
7(MSB)	Enable	ENA		

2. Fault Event Register

The Fault Event will set a bit if a condition occurs and it is Enabled. The register is cleared when FEVE?, CLS or RST commands are received.

Table 7-12: Fault Event Register

BIT	Enable bit name	Fault symbol	Bit Set condition	Bit reset condition
0 (LSB)	Spare bit	SPARE	Fault condition occurs and it is enabled. The fault can set a bit, but when the fault clears the bit remains set.	Entire Event Register is cleared when user sends “FEVE?” command to read the register. “CLS” and power-up also clear the Fault Event Register. (The Fault Event Register is not cleared by RST)
1	AC Fail	AC		
2	Over Temperature	OTP		
3	Foldback	FOLD		
4	Over Voltage	OVP		
5	Shut Off	SO		
6	Output Off	OFF		
7(MSB)	Enable	ENA		

3. Status Enable Register

The Status Enable Register is set by the user to Enable SRQs for changes in power supply status.

Table 7-13: Status Enable Register

BIT	Status name	Status symbol	Bit Set condition	Bit reset condition
0 (LSB)	Constant Voltage	CV	User command: “SENA nn” is received, where nn is hexadecimal bits.	User command: “SENA nn” is received, where nn is hexadecimal bits. If “nn”=00, no SRQ is sent when there is a change in Status Condition Register.
1	Constant Current	CC		
2	No Fault	NFLT		
3	Fault active	FLT		
4	Auto-Restart enabled	AST	Always zero	Always zero
5	Fold enabled	FDE	Always zero	Always zero
6	Spare	Spare	Always zero	Always zero
7 (MSB)	Local Mode	LCL	“SENA nn” command	“SENA nn” command

4. Status Event Register

The Status Event Register will set a bit if a change in the power supply status occurs and it is enabled. The register is cleared when the “SEVE?” or “CLS” commands are received. A change in this register will generate SRQ.

Table 7-14: Status Event Register

BIT	Status name	Status symbol	Bit Set condition	Bit reset condition
0 (LSB)	Constant Voltage	CV	Changes in status occur and it is Enabled. The change can set a bit, but when the change clears the bit remains set.	Entire Event Register is cleared when user sends “SEVE?” command to read the register. “CLS” and power-up also clear the Status Event Register.
1	Constant Current	CC		
2	No Fault	NFLT		
3	Fault active	FLT		
4	Auto-Restart enabled	0	Always zero	
5	Fold enabled	0	Always zero	
6	Spare	0	Always zero	
7 (MSB)	Local Mode	LCL	Unit is set to Local by pressing front panel REM/LOC button.	

7.12 SERIAL COMMUNICATION TEST SET-UP

Use the following instructions as basic set-up to test the serial communication operation.

1.Equipment: PC with Windows Hyper Terminal, software installed, Genesys™ Power supply, RS232 cable.

2. PC set-up: 2.1 Open Hyper Terminal…….New Connection.

2.2 Enter a name

2.3 Connect to……Direct to Com 1 or Com 2

2.4 Configure port properties:

Bits per second……9600
Data bits……8
Parity……None
Stop bits……1
Flow control…….None

2.5 Open Properties in the program File……Properties

2.6 Setting: ASCII Set Up
Select Echo characters locally, select send line ends with line feed.
On some PC systems, pressing the number keypad "Enter" will distort displayed messages. Use the alphabetic "Enter" instead.

3. Power supply set-up:

3.1 Connect the power supply to the PC using the RS232 cable.
3.2 Set via the front panel: Baud Rate: 9600, Address: 06 (default).
3.3 Set via the rear panel: RS232/RS485 to RS232 (refer to Section 4-4).

4. Communication Test:

4.1 Model identification:
PC:write: ADR 06
Power supply response: "OK"

4.2 Command test:
PC write: OUT1
Power supply response: "OK"
PC write: PVn
Power supply response: "OK"
PC write: PCn (for values of n see Tables 7-4, 7-5 and 7-6)
Power supply response: "OK"

The power supply should turn on and the display will indicate the actual Output Voltage and the actual Output Current.

CHAPTER 8 ISOLATED ANALOG PROGRAMMING OPTION

8.1 INTRODUCTION

Isolated Analog Programming is an internal Option Card for analog programming of the Genesys™ power supply series. The option is factory installed and cannot be obtained with a GPIB (IEEE-488) Interface. Output Voltage and Output Current can be programmed and readback through optically isolated signals which are isolated from all other ground references in the power supply.

There are two types of Isolated Analog programming cards:

1. 0-5V/0-10V option (PN: IS510): Using 0-5V or 0-10V signals for programming and readback.
2. 4-20mA option (PN: IS420): Using current signals for programming and readback.

8.2 SPECIFICATIONS

8.2.1 0-5V/0-10V OPTION (PN: IS510)

Programming Inputs	Output Voltage programming accuracy	%	+/-1
	Output Current programming accuracy	%	+/-1
	Output Voltage programming temperature coefficient	PPM/°C	+/-100
	Output Current programming temperature coefficient	PPM/°C	+/-100
	Input impedance	Ohm	1M
	Absolute maximum voltage	Vdc	0-15
	Max. voltage between program inputs and supply outputs	Vdc	600
Monitoring Outputs	Output Voltage monitoring accuracy	%	+/-1.5
	Output Current monitoring accuracy	%	+/-1.5
	Output Impedance (see Note)	Ohm	100
	Max. voltage between monitoring outputs and supply outputs	Vdc	600

NOTE:
Use 100Kohm minimum input impedance for the monitoring circuits to minimize the readback error.

8.2.2 4-20mA option (PN: IS420)

Programming Inputs	Output Voltage programming accuracy	%	+/-1
	Output Current programming accuracy	%	+/-1
	Output Voltage programming temperature coefficient	PPM/°C	+/-200
	Output Current programming temperature coefficient	PPM/°C	+/-200
	Input impedance	Ohm	50
	Absolute maximum input current	Vdc	0-30
	Max. voltage between program inputs and supply outputs	Vdc	600
Monitoring Outputs	Output Voltage monitoring accuracy	%	+/-1.5
	Output Current monitoring accuracy	%	+/-1.5
	Maximum load impedance	Ohm	500
	Max. voltage between monitoring outputs and supply outputs	Vdc	600

8.3 ISOLATED PROGRAMMING & MONITORING CONNECTOR

Refer to Table 8-1 for detailed description of the rear panel Isolated Programming & Monitoring connector. To provide the lowest noise performance, it is recommended to use shielded-twisted pair wiring.

Refer to Fig.8-1 for description of the Isolated Analog Programming & Monitoring connector.

Isolated programming plug P/N: MC1.5/8-ST-3.81, Phoenix.

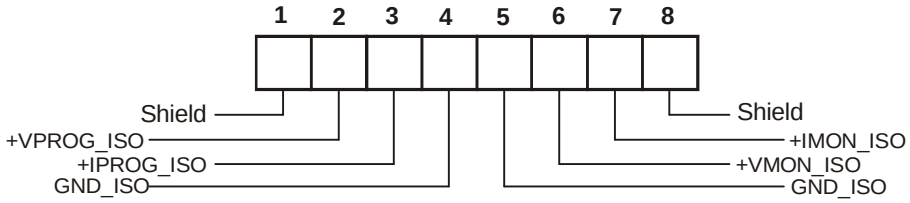

Fig.8-1: Isolated Programming & Monitoring connector

Table 8-1: Detailed description of Isolated programming & Monitoring connector

Terminal	Signal name	Function	Range 0-5/0-10V IS510 option	Range 4-20mA IS420 option
1	SHLD	Shield, connected internally to chassis of the power supply.	Chassis ground	
2	+VPROG_ISO	Output Voltage programming input	0-5V/0-10V	4-20mA
3	+IPROG_ISO	Output Current programming input	0-5V/0-10V	4-20mA
4	GND	Ground for programming signals.	Ground	Ground
5	GND	Ground for programming signals.	Ground	Ground
6	+VMON_ISO	Output voltage monitoring output	0-5V/0-10V	4-20mA
7	+IMON_ISO	Output current monitoring output	0-5V/0-10V	4-20mA
8	SHLD	Shield, connected internally to chassis of the supply.	Chassis ground	

CAUTION

When the Isolated Analog Option is installed, do not apply any signals to the non-isolated VPGM and IPGM (J1-9 and J1-10) pins. All other J1 features may be used normally. Refer to Section 4.5 for a description of J1 features.

8.4 SETUP AND OPERATING INSTRUCTIONS

CAUTION
To prevent damage to the unit, do not program the output voltage and current to higher than the power supply rating.

8.4.1 Setting up the power supply for 0-5V/0-10V Isolated Programming and Monitoring

Perform the following procedure to configure the power supply:

1. Turn the power supply AC power switch to Off.
2. Connect a wire jumper between J1-8 and J1-12 (refer to Table 4-4).
3. Set the Setup switch SW1, positions 1 and 2 to the UP position.
4. Set SW1, position 3 to select the Programming Voltage Range: Down=0-5V, Up=0-10V.
5. Set SW1, position 4 to select the Monitoring Range: Down=0-5V, Up=0-10V.
6. Ensure that SW1, positions 7 and 8 are in the Down position.
7. Connect the programming sources to the mating plug of the Isolated Programming connector. Observe for correct polarity of the voltage source.

NOTE
J1-8 and J1-12 must be shorted together with a wire jumper.

8. Set the programming sources to the desired levels and turn the power supply ON.

8.4.2 Setting up the power supply for 4-20mA Isolated Programming and Monitoring

Perform the following procedure to configure the power supply:

1. Turn the power supply AC power switch to Off.
2. Connect a wire jumper between J1-8 and J1-12 (refer to Table 4-4).
3. Set the Setup switch SW1, positions 1 and 2 to the Up position.
4. Set SW1, position 3 to the Up position.
5. Set SW1, position 4 to the Up position.
6. Ensure that SW1 positions 1 and 2 to their Up position.
7. Connect the programming source to the mating plug of the Isolated Programming connector. Observe for correct polarity of the voltage source.

NOTE
J1-8 and J1-12 must be shorted together with a wire jumper.

8. Set the programming sources to the desired levels and turn the power supply ON.

NOTE
SW1 position 3 and 4 must be in the Up position for operation with 4-20mA Isolated Programming and Monitoring.

CHAPTER 9 MAINTENANCE

9.1 INTRODUCTION

This Chapter provides information about maintenance, calibration and troubleshooting.

9.2 UNITS UNDER WARRANTY

Units requiring repair during the warranty period should be returned to a TDK-Lambda Americas Inc authorized service facility. Refer to the addresses listing on the back cover of this User's Manual. Unauthorized repairs performed by other than the authorized service facilities may void the warranty.

9.3 PERIODIC MAINTENANCE

No routine maintenance of the power supply is required except for periodic cleaning. To clean, disconnect the unit from the AC supply and allow 30sec. For discharging internal voltages. The front panel and the metal surfaces should be cleaned using a mild solution of detergent and water. The solution should be applied onto a soft cloth, and not directly to the surface of the unit. Do not use aromatic hydocarbons or chlorinated solvents for cleaning. Use low pressure compressed air to blow dust from the unit.

9.4 ADJUSTMENTS AND CALIBRATION

No internal adjustment or calibration is required. There is NO REASON to open the power supply cover.

9.5 PARTS REPLACEMENT AND REPAIRS

As repairs are made only by the manufacturer or by authorized service facilities, no parts replacement information is provided in the manual. In case of failure, unusual or erratic operation of the unit, contact a TDK-Lambda Americas Inc. sales or service facility nearest you. Please refer to the TDK-Lambda Americas Inc. sales offices addresses listing on the back cover of this User's Manual.

9.6 TROUBLESHOOTING

If the power supply appears to be operating improperly, use the Troubleshooting Guide (Table 9-1) to determine whether the power supply, load or external control circuit are the cause.

Configure the power supply for basic front panel operation and perform the tests of Section 3.8 to determine if the problem is with the supply.

Table 9-1 provides the basic checks that can be performed to diagnose problems, with references to Sections of this User's Manual for further information.

Table 9-1: Troubleshooting guide

SYMPTOM	CHECK	ACTION	REF
No output. All displays and indicators are blank.	Is the AC power cord defective?	Check continuity, replace if necessary.	3.7
	Is the AC input voltage within range?	Check AC input voltage. Connect to appropriate voltage source.	3.6 3.7
Output is present momentarily but shuts Off quickly. The display indicates "AC".	Does the AC source voltage sag when load is applied?	Check AC input voltage. Connect to appropriate voltage source.	3.6
Output is present momentarily but shuts off quickly.The display indicates "OUP".	Is the power supply configured to Remote sense?	Check if the positive or negative load wire is loose.	3.9.6 3.9.8

SYMPTOM	CHECK	ACTION	REF
Output Voltage will not adjust. Front panel CC LED is On.	Is the unit in constant current mode?	Check Output Current setting and load current.	5.2.1 5.2.2
Output Voltage will not adjust Front panel CV Led is On.	Check if output voltage is adjusted above OVP setting or below UVL setting.	Set OVP or UVL so they will not limit the output.	5.3 5.4
Output Current will not adjust. Front panel CV LED is on.	Is the unit in constant voltage mode?	Check Output Current and voltage setting	5.2
Large ripple present in output.	Is the power supply in remote sense? Is the voltage drop on the load wire high?	Check load and sense wires connection for noise and impedance effects. Minimize the drop on the load wires.	3.9.4 3.9.8
No output. Display indicates “OUP”	Overvoltage Protection circuit is tripped.	Turn off the AC power switch. Check load connections. If Analog Programming is used, check if the OVP is set lower than the output.	5.3
No output. Front panel ALARM LED is blinking.	Display indicates “ENA”	Check rear panel J1 ENABLE connection.	5.8
		Setup switch SW1 setting.	4.4
	Display indicates “SO”	Check rear panel J1 Output Shut-Off connection.	5.7
	Display indicates “OTP”	Check if air intake or exhaust are blocked. Check if the unit is installed adjacent to heat generating equipment.	
	Display indicates “Fb”	Check Foldback setting and load current.	5.5
Poor Load regulation. Front panel CV LED is on.	Are sensing wires connected properly?	Connect the sense wires according to User’s Manual instructions.	3.9.8
The front panel controls are non-functional.	Is the power supply in Local-Lockout mode?	Turn Off the AC power and wait until the display turns off. Turn on the AC power and press front panel REM/LOC button.	7.2.5

9.7 FUSE RATING

There are no user replaceable fuses in the power supply. Internal fuses are sized for fault protection and if a fuse was opened, it would indicate that service is required. Fuse replacement should be made by qualified technical personnel. Refer to Table 9-2 for a listing of the fuses.

Table 9-2: Internal fuses

Fuse designation	3-Phase, 190-240Vac	3-Phase, 380-415Vac
INPUT FUSE	F301, F302, F303: 30A, 250VAC, Fast-Acting	F651, F652, F653: 15A, 600VAC, Fast-Acting
F401, F402	5A, 400VDC, Normal-Blow	