Maintenance and Service Guide

HP Compaq nc8000 Business Notebook
HP Compaq nw8000 Mobile Workstation

Document Part Number: 333954-005

October 2006

This guide is a troubleshooting reference used for maintaining and servicing the notebook. It provides comprehensive information on identifying notebook features, components, and spare parts; troubleshooting notebook problems; and performing notebook disassembly procedures.

Maintenance and Service Guide
HP Compaq nc8000 Business Notebook
HP Compaq nw8000 Mobile Workstation
Fifth Edition: October 2006
First Edition: September 2003
Document Part Number: 333954-005

Contents

3 Illustrated Parts Catalog

4 Removal and Replacement Preliminaries

5 Removal and Replacement Procedures

1

Product Description

The HP Compaq nc8000 Business Notebook and HP Compaq nw8000 Mobile Workstation offer advanced modularity, an Intel® Pentium® M processor with 64-bit architecture, an ATI MOBILITY RADEON 9600 Pro graphics controller with 128 or 64 MB of discrete video memory, and extensive multimedia support.

HP Compaq nc8000 Business Notebook and HP Compaq nw8000 Mobile Workstation

1.1 Models

Notebook model information is shown in Tables 1-1 through 1-3. Configuration code **LY2Z** applies to all models of the HP Compaq nc8000 Business Notebook. Configuration code **MDBZ** applies to all models of the HP Compaq nw8000 Mobile Workstation.

Table 1-1
HP Compaq nc8000 Business Notebook and HP Compaq nw8000 Mobile Workstation Model Naming Conventions

Key									
Cnc	P	170	U5	80	Y	Gg	10	P	XXXXXX-XXX
1	**2**	**3**	**4**	**5**	**6**	**7**	**8**	**9**	**10**

Key	Description	Options	
1	Brand/Series designator	C = HP Compaq	nc = nc8000 nw = nw8000
2	Processor type	P = Intel Pentium M	
3	Processor speed	170 = 1.70 GHz 160 = 1.60 GHz	150 = 1.50 GHz 140 = 1.40 GHz
4	Display type/ size/resolution	U = UXGA S = SXGA+ X = XGA	5 = 15.X-inch
5	Hard drive size	80 = 80 GB 60 = 60 GB	40 = 40 GB
6	Optical drive designator	D = DVD-ROM Y = DVD+RW/R and CD-RW Combo Drive	W = DVD/CD-RW Combo Drive

Table 1-1
HP Compaq nc8000 Business Notebook and HP Compaq nw8000 Mobile Workstation Model Naming Conventions *(Continued)*

Key									
Cnc	P	170	U5	80	Y	Gg	10	P	XXXXXX-XXX
1	**2**	**3**	**4**	**5**	**6**	**7**	**8**	**9**	**10**

Key	Description	Options	
7	Integrated communication/ wireless device	G = Combination modem + GB NIC N = None	b = 802.11b d = 802.11a/b/g g = 802.11a/b + Bluetooth® i = 802.11b + Bluetooth j = 802.11g + Bluetooth k = 802.11a/b + Bluetooth m = 802.11a/b/g + Bluetooth p = Bluetooth
8	RAM	10 = 1.0-GB 25 = 256-MB	51 = 512-MB
9	Operating system	P = Microsoft® Windows® XP Professional 2 = Microsoft Windows 2000	
10	SKU#		

Table 1-2
HP Compaq nc8000 Business Notebook Models

These HP Compaq nc8000 Business Notebook models feature the following:

- Dual point (pointing stick and TouchPad) pointing device
- 128-MB discrete video memory
- 8-cell, lithium ion (Li-Ion) battery pack
- 3-year warranty on parts and labor

Cnc8000	P	170	U5	60	Y	Gm	51	P	
Asia Pacific			DQ617A UUF			Japan			DQ617A ABJ
Belgium			DQ617A UUG			The Netherlands			DQ617A ABH
Denmark			DQ617A ABY			Norway			DQ617A ABN
France			DQ617A ABF			Portugal			DQ617A AB9
Germany			DQ617A ABD			Sweden/Finland			DQ617A AK8
Greece			DQ617A AB7			United Kingdom			DQ617A ABU
Italy			DQ617A ABZ			United States			DQ617A ABA
Cnc8000	P	160	S5	40	D	Gm	51	P	
Germany			DQ618A ABD			United Kingdom			DQ618A ABU
Italy			DQ618A ABZ			United States			DQ618A ABA
Japan			DQ618A ABJ						

Table 1-2
HP Compaq nc8000 Business Notebook Models *(Continued)*

These HP Compaq Business Notebook nc8000 models feature the following:

- Dual point (pointing stick and TouchPad) pointing device
- 64-MB discrete video memory
- 8-cell, Li-Ion battery pack
- 3-year warranty on parts and labor

Cnc8000	P	170	X5	60	W	Gm	51	P	
French Canada			DH918U ABC			United States			DH918U ABA
Cnc8000	P	160	S5	40	W	Gj	51	2	
Belgium			DJ242A UUG			The Netherlands			DJ242A ABH
Denmark			DJ242A ABY			Norway			DJ242A ABN
Europe			DJ242A ABB			Portugal			DJ242A AB9
France			DJ242A ABF			Spain			DJ242A ABE
Germany			DJ242A ABD			Sweden/Finland			DJ242A AK8
Greece			DJ242A AB7			Switzerland			DJ242A UUZ
Iceland			DJ242A A2M			United Kingdom			DJ242A ABU
Italy			DJ242A ABZ						

Table 1-2
HP Compaq nc8000 Business Notebook Models *(Continued)*

Cnc8000	P	160	S5	40	D	Gn	51	P	
Asia Pacific			DN889A UUF			Latin America			DN889A ABM
Australia			DN889A ABG			The Netherlands			DN889A ABH
Belgium			DN889A UUG			Norway			DN889A ABN
Brazil			DN889A AC4			People's Republic of China			DN889A AB2
Czech Republic			DN889A AKB						
Denmark			DN889A ABY						
Europe			DN889A ABB			Poland			DN889A AKD
France			DN889A ABF			Portugal			DN889A AB9
French Canada			DN889A ABC			Russia			DN889A ACB
Germany			DN889A ABD			Saudi Arabia			DN889A ABV
Greece			DN889A AB7			Slovenia			DN889A AKN
Hong Kong			DN889A AB5			Spain			DN889A ABE
Hungary			DN889A AKC			Sweden/Finland			DN889A AK8
Iceland			DN889A A2M			Switzerland			DN889A UUZ
India			DN889A ACJ			Taiwan			DN889A AB0
Israel			DN889A ABT			Thailand			DN889A AKL
Italy			DN889A ABZ			Turkey			DN889A AB8
Japan			DN889A ABJ			United Kingdom			DN889A ABU
Japan English			DN889A ACF			United States			DN889A ABA
Korea			DN889A AB1						

Table 1-2
HP Compaq nc8000 Business Notebook Models *(Continued)*

Cnc8000	P	160	S5	40	D	Gn	51	2	
Asia Pacific			DN890A UUF			Latin America			DN890A ABM
Australia			DN890A ABG			The Netherlands			DN890A ABH
Belgium			DN890A UUG			Norway			DN890A ABN
Brazil			DN890A AC4			People's Republic of China			DN890A AB2
Czech Republic			DN890A AKB						
Denmark			DN890A ABY						
Europe			DN890A ABB			Poland			DN890A AKD
France			DN890A ABF			Portugal			DN890A AB9
French Canada			DN890A ABC			Russia			DN890A ACB
Germany			DN890A ABD			Saudi Arabia			DN890A ABV
Greece			DN890A AB7			Slovenia			DN890A AKN
Hong Kong			DN890A AB5			Spain			DN890A ABE
Hungary			DN890A AKC			Sweden/Finland			DN890A AK8
Iceland			DN890A A2M			Switzerland			DN890A UUZ
India			DN890A ACJ			Taiwan			DN890A AB0
Israel			DN890A ABT			Thailand			DN890A AKL
Italy			DN890A ABZ			Turkey			DN890A AB8
Japan			DN890A ABJ			United Kingdom			DN890A ABU
Japan English			DN890A ACF			United States			DN890A ABA
Korea			DN890A AB1						
Cnc8000	P	160	S5	40	W	Gj	51	P	
Belgium			DJ241A UUG			The Netherlands			DJ241A ABH
Denmark			DJ241A ABY			Norway			DJ241A ABN
Europe			DJ241A ABB			Portugal			DJ241A AB9
France			DJ241A ABF			Spain			DJ241A ABE
Germany			DJ241A ABD			Sweden/Finland			DJ241A AK8
Greece			DJ241A AB7			Switzerland			DJ241A UUZ
Iceland			DJ241A A2M			United Kingdom			DJ241A ABU
Italy			DJ241A ABZ						

Table 1-2
HP Compaq nc8000 Business Notebook Models *(Continued)*

Cnc8000	RP	150	U5	60	W	Gj	51	P	
Europe			DU250S#ABB						
Cnc8000	RP	150	X5	40	D	Gi	25	P	
People's Republic of China			DT818P#AB2						
Cnc8000	RP	150	X5	40	D	Gp	25	2	
Belgium			DJ244A#UUG			Norway			DJ244A#ABN
Czech Republic			DJ244A#AKB			Poland			DJ244A#AKD
Denmark			DJ244A#ABY			Portugal			DJ244A#AB9
Europe			DJ244A#ABB			Russia			DJ244A#ACB
France			DJ244A#ABF			Saudi Arabia			DJ244A#ABV
Germany			DJ244A#ABD			Slovenia			DJ244A#AKN
Greece			DJ244A#AB7			Spain			DJ244A#ABE
Hungary			DJ244A#AKC			Sweden/Finland			DJ244A#AK8
Iceland			DJ244A#A2M			Switzerland			DJ244A#UUZ
Israel			DJ244A#ABT			Turkey			DJ244A#AB8
Italy			DJ244A#ABZ			United Kingdom			DJ244A#ABU
The Netherlands			DJ244A#ABH						
Cnc8000	RP	150	X5	40	D	Gp	25	P	
Belgium			DJ243A#UUG			Norway			DJ243A#ABN
Czech Republic			DJ243A#AKB			Poland			DJ243A#AKD
Denmark			DJ243A#ABY			Portugal			DJ243A#AB9
Europe			DJ243A#ABB			Russia			DJ243A#ACB
France			DJ243A#ABF			Saudi Arabia			DJ243A#ABV
Germany			DJ243A#ABD			Slovenia			DJ243A#AKN
Greece			DJ243A#AB7			Spain			DJ243A#ABE
Hungary			DJ243A#AKC			Sweden/Finland			DJ243A#AK8
Iceland			DJ243A#A2M			Switzerland			DJ243A#UUZ
Israel			DJ243A#ABT			Turkey			DJ243A#AB8
Italy			DJ243A#ABZ			United Kingdom			DJ243A#ABU
The Netherlands			DJ243A#ABH						

Table 1-2
HP Compaq nc8000 Business Notebook Models *(Continued)*

Cnc8000	RP	150	X5	40	W	Gi	25	P	
People's Republic of China			DT819P#AB2						
Cnc8000	RP	150	X5	60	W	Gb	25	P	
Taiwan			DT815P#AB0						
Cnc8000	RP	150	Y5	40	D	Gb	25	P	
People's Republic of China			DS814P#AB2						
Cnc8000	RP	150	Y5	40	W	Gi	51	P	
People's Republic of China			DT817P#AB2						
Cnc8000	RP	150	Y5	60	W	Gi	51	P	
United States			DH936U#ABA			French Canada			DH936U#ABC
Cnc8000	RP	150	Y5	60	W	GN	51	H	
Europe			DU256S#ABB						
Cnc8000	RP	150	Y5	60	W	Gb	51	P	
Korea			DT807P#AB1						
Cnc8000	P	140	X5	40	D	Gi	25	P	
Asia Pacific			DQ616A UUF			The Netherlands			DQ616A ABH
Belgium			DQ616A UUG			Norway			DQ616A ABN
Denmark			DQ616A ABY			Portugal			DQ616A AB9
France			DQ616A ABF			Spain			DQ616A ABE
Germany			DQ616A ABD			Sweden/Finland			DQ616A AK8
Greece			DQ616A AB7			Switzerland			DQ616A UUZ
Italy			DQ616A ABZ			United Kingdom			DQ616A ABU
Japan			DQ616A ABJ			United States			DQ616A ABA
Cnc8000	P	140	X5	40	D	Gn	25	P	
French Canada			DH917U ABC			United States			DH917U ABA

Table 1-3
HP Compaq nw8000 Mobile Workstation Models

These HP Compaq nw8000 Mobile Workstation models feature the following:

- Dual point (pointing stick and TouchPad) pointing device
- 128-MB discrete video memory
- TPM security card
- 8-cell, Li-Ion battery pack
- 3-year warranty on parts and labor

Cnw8000	P	170	U5	60	Y	Gd	10	P	
Asia Pacific Australia Hong Kong Japan Korea			DU536P UUF DU536P ABG DU536P AB5 DU536P ABJ DU536P AB1			People's Republic of China Taiwan			DU536P AB2 DU536P AB0
Cnw8000	P	170	U5	60	W	Gk	10	P	
United States			DQ857A ABA						
Cnw8000	P	160	X5	60	W	Gp	51	P	
Australia			DS864P ABG						
Cnw8000	P	160	X5	60	W	Gp	51	2	
Australia			DS865P ABG						

Table 1-3
HP Compaq nw8000 Mobile Workstation Models *(Continued)*

These HP Compaq nw8000 Mobile Workstation models feature the following:

- Dual point (pointing stick and TouchPad) pointing device
- 128-MB discrete video memory
- 8-cell, Li-Ion battery pack
- 3-year warranty on parts and labor

Cnw8000	P	170	U5	60	Y	Gd	10	P	
Australia			DU535P ABG			People's Republic of China			DU535P AB2
Hong Kong			DU535P AB5						
Japan			DU535P ABJ						
Korea			DU535P AB1			Taiwan			DU535P AB0

Cnw8000	P	170	U5	60	Y	Gn	51	P	
Asia Pacific			DN912A UUF			Latin America			DN912A ABM
Australia			DN912A ABG			People's Republic of China			DN912A AB2
Belgium			DN912A UUG						
Europe			DN912A ABB						
France			DN912A ABF			Spain			DN912A ABE
French Canada			DN912A ABC			Sweden/Finland			DN912A AK8
Germany			DN912A ABD			Switzerland			DN912A UUZ
Italy			DN912A ABZ			Taiwan			DN912A AB0
Japan			DN912A ABJ			United Kingdom			DN912A ABU
Korea			DN912A AB1			United States			DN912A ABA
Hong Kong			DN912A AB5						

Cnw8000	P	170	U5	60	Y	Gn	51	2	
Asia Pacific			DN913A UUF			Latin America			DN913A ABM
Australia			DN913A ABG			People's Republic of China			DN913A AB2
Belgium			DN913A UUG						
Europe			DN913A ABB						
France			DN913A ABF			Spain			DN913A ABE
French Canada			DN913A ABC			Sweden/Finland			DN913A AK8
Germany			DN913A ABD			Switzerland			DN913A UUZ
Italy			DN913A ABZ			Taiwan			DN913A AB0
Japan			DN913A ABJ			United Kingdom			DN913A ABU
Korea			DN913A AB1			United States			DN913A ABA
Hong Kong			DN913A AB5						

Table 1-3
HP Compaq nw8000 Mobile Workstation Models *(Continued)*

Cnw8000	P	170	U5	60	W	Gm	51	P	
Asia Pacific			DU534P UUF						
Cnw8000	P	170	U5	60	W	Gd	10	P	
Asia Pacific			DU535P UUF			Japan			DU529P ABJ
Cnw8000	P	170	U5	60	W	Gd	10	2	
Japan			DU530P ABJ						
Cnw8000	P	170	U5	60	W	Gd	51	P	
Japan			DU531P ABJ						
Cnw8000	P	170	S5	60	W	Gk	51	P	
Europe France Germany Italy			DQ556A ABB DQ556A ABF DQ556A ABD DQ556A ABZ			Japan United Kingdom United States			DQ556A ABJ DQ556A ABU DQ556A ABA
Cnw8000	P	170	X5	60	W	Gm	51	P	
Asia Pacific			DU532P UUF						
Cnw8000	P	160	X5	60	W	Gi	51	P	
People's Republic of China			DT821P AB2						
Cnw8000	P	150	X5	60	W	Gm	51	P	
Asia Pacific			DU533P UUF						
Cnw8000	P	150	X5	60	W	Gi	51	P	
People's Republic of China			DT820P AB2						
Cnw8000	P	170	U5	60	W	Gm	10	P	
French Canada			DH919U ABC			United States			DH919U ABA

Table 1-3
HP Compaq nw8000 Mobile Workstation Models *(Continued)*

Cnw8000	P	170	U5	60	W	Gg	51	P	
Belgium Europe France Germany Italy			DJ294A UUG DJ294A ABB DJ294A ABF DJ294A ABD DJ294A ABZ			Spain Sweden Switzerland United Kingdom			DJ294A ABE DJ294A AK8 DJ294A UUZ DJ294A ABU
Cnw8000	P	160	S5	40	W	Gn	51	P	
French Canada			DH920U ABC			United States			DH920U ABA

1.2 Features

- Intel Pentium M 1.7-, 1.6-, 1.5-, and 1.4-GHz processors, all with 1024-KB L2 cache and 400-MHz processor side bus, varying by notebook model
- 15.1-inch UXGA (1600×1200), SXGA+ (1400×1050), or XGA (1024×768) TFT display with over 16.7 million colors, varying by notebook model
- ATI MOBILITY RADEON 9600 Pro graphics controller with 128 or 64 MB of video memory, varying by notebook model
- 80-, 60-, or 40-GB high-capacity hard drive, varying by notebook model
- 256-MB DDR Synchronous DRAM (SDRAM) at 333 MHz, expandable to 2.0 GB
- Microsoft® Windows® 2000 or Windows XP Professional, varying by notebook model
- Full-size Windows 98 keyboard with integrated numeric keypad
- Dual point (TouchPad and pointing stick) pointing device, with TouchPad on/off button and light

- Integrated Secure Digital (SD) Memory Card flash media slot
- Integrated 10/100/1000 BASE-T Ethernet local area network (LAN) NIC with RJ-45 connector
- Integrated wireless support for Bluetooth® LAN and Mini PCI 802.11a/b/g LAN devices
- Support for fixed optical drive and MultiBay device
- Support for two Type II/Type III PC Card slots (one integrated) with support for both 32-bit (CardBus) and 16-bit PC Cards
- External 65-W AC adapter with power cord
- 8-cell Li-Ion battery pack
- HP PremierSound audio
- Support for the following optical drives:
  - 24X Max DVD/CD-RW Combo Drive
  - 24X Max DVD+RW/R and CD-RW Combo Drive
  - 8X Max DVD-ROM Drive
  - 24X Max CD-ROM Drive

- Connectors:
  - SD Card
  - Infrared
  - Two Type II PC Card slots
  - RJ-11 (modem)
  - RJ-45 (NIC)
  - Two Universal Serial Bus (USB) 2.0
  - S-Video
  - Parallel
  - Serial
  - External monitor
  - DC power
  - Docking
  - IEEE 1394 digital
  - Microphone
  - Stereo speaker/headphone

1.3 Clearing a Password

If the notebook you are servicing has an unknown password, follow these steps to clear the password. These steps also clear the CMOS memory:

1. Prepare the notebook for disassembly (refer to Section "5.3 Preparing the Notebook for Disassembly" for more information).
2. Remove the real time clock (RTC) battery (refer to Section "5.16 RTC Battery").
3. Wait approximately 5 minutes.
4. Replace the RTC battery and reassemble the notebook.
5. Connect AC power to the notebook. Do **not** reinsert any battery packs at this time.
6. Turn on the notebook.

All passwords and all CMOS settings are cleared.

1.4 Power Management

The notebook comes with power management features that extend battery operating time and conserve power. The notebook supports the following power management features:

- Standby
- Hibernation
- Setting customization by the user
- Hotkeys for setting the level of performance
- Lid switch standby/resume
- Power/standby button
- Advanced Configuration and Power Management (ACPM) compliance

1.5 External Components

The external components on the front and right side of the notebook are shown below and described in Table 1-4.

Front and Right-Side Components

Table 1-4
Front and Right-Side Components

Item	Component	Function
1	Stereo speakers (2)	Produce stereo sound.
2	Display release latch	Opens the notebook.
3	Mute button	Mutes the system volume. The button lights up when volume is muted.
4	Volume control buttons	Increase and decrease system volume. Press the volume up button (on right) to increase sound. Press the volume down button (on left) to decrease sound.
5	PC Card eject buttons	Eject an optional PC Card or smart card (if a smart card reader is installed) from the top or bottom PC Card slot.
6	Audio line-out jack	Connects optional powered stereo speakers, headphones, headset, or television audio.
7	Microphone jack	Connects an optional monaural microphone.
8	PC Card slots	Support optional Type I, Type II, or Type III 32-bit (CardBus) or 16-bit PC Cards. ✎ In select notebooks, one PC Card slot can be replaced with a factory-installed smart card reader.
9	Secure Digital (SD) slot	Accepts SD Memory Card and MultiMedia Cards.
10	MultiBay	Supports an optional MultiBay device, such as a drive or battery pack.
11	Infrared port	Provides wireless communication between the notebook and an optional IrDA-compliant device.
12	RJ-11 jack	Connects a modem cable.

The external components on the rear and left side are shown below and described in Table 1-5.

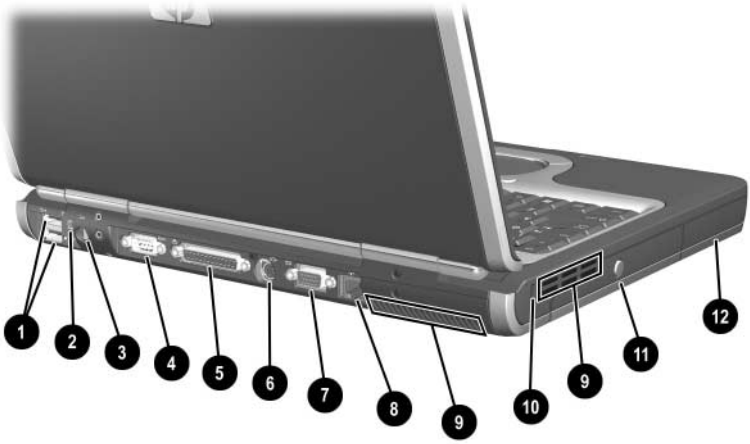

Rear and Left-Side Components

Table 1-5
Rear and Left-Side Components

Item	Component	Function
1	USB connectors (2)	Connect USB 1.1- and 2.0-compliant devices to the notebook using a standard USB cable. The bottom connector is a self-powered USB connector. It can be used to connect USB 1.1- and 2.0-compliant devices to the notebook using a standard USB cable, and connect an optional External MultiBay to the notebook using the External MultiBay-powered USB cable.
2	1394 connector	Connects a device that requires high bandwidth, such as a digital camera or other video or audio device.

Table 1-5
Rear and Left-Side Components *(Continued)*

Item	Component	Function
3	Power connector	Connects an AC adapter or an optional Automobile Power Adapter/Charger or Aircraft Power Adapter.
4	Serial connector	Connects an optional serial device.
5	Parallel connector	Connects an optional parallel device, such as an external diskette drive or a printer.
6	S-Video out jack	Connects an optional S-Video device, such as a television, VCR, camcorder, overhead projector, or video capture card.
7	External monitor connector	Connects an optional external monitor or overhead projector.
8	RJ-45 jack	Connects a network cable.
9	Intake vents (2)	Enable airflow to cool internal components. △ To prevent overheating, do not obstruct vents. Using the notebook on a soft surface, such as a pillow, blanket, rug, or thick clothing, can block airflow.
10	Security cable slot	Attaches an optional security cable to the notebook. ✎ The purpose of security solutions is to act as a deterrent. These solutions do not prevent the product from being mishandled or stolen.
11	Optical disk drive	Reads and records CD and DVD media.
12	Battery bay	Holds the primary battery pack. The battery pack ships outside the notebook.

The notebook keyboard components are shown below and described in Table 1-6.

Keyboard Components

Table 1-6
Keyboard Components

Item	Component	Function
1	Windows logo key	Displays the Windows Start menu.
2	**fn** key	Executes frequently used system functions when pressed in combination with a function key or the **esc** key.
3	**caps lock** key	Enables capital alphabetic character lock.
4	**f1** through **f12** function keys	Execute indicated system functions when pressed in combination with the **fn** key.
5	**num lock** key	Enables numeric lock and the internal keypad.
6	Internal keypad	Can be used like the keys on an external numeric keypad.
7	Cursor control keys	Move the cursor around the screen.
8	Application key	Displays shortcut menu for items beneath the pointer.

The notebook top components are shown below and described in Table 1-7.

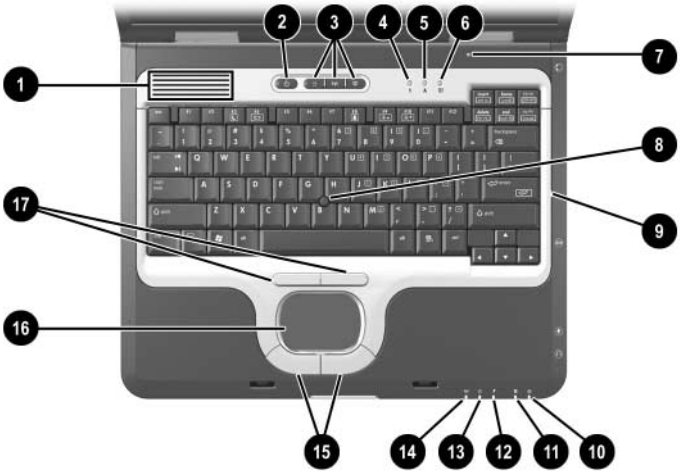

Top Components

Table 1-7
Top Components

Item	Component	Function
1	Intake vents (2)	Enable airflow to cool internal components. ⚠ To prevent overheating, do not obstruct vents. Using the notebook on a soft surface, such as a pillow, blanket, rug, or thick clothing, can block airflow.
2	Power button	When the notebook is: ■ Off, press and release to turn on the notebook. ■ In Standby, press and release to exit Standby. ■ In Hibernation, press and release to exit Hibernation. If the system has stopped responding and Windows shutdown procedures cannot be used, press and hold for five seconds to turn off the notebook.
3	Quick Launch buttons (3)	Enable you to access common functions with a single keystroke.
4	Num lock light	On: Num lock is on or the embedded numeric keypad is enabled.
5	Caps lock light	On: Caps lock is on.
6	Scroll lock light	On: Scroll lock is on.
7	Display lid switch	■ If the notebook is closed while on, turns off the display. ■ If the notebook is opened while in Standby, turns on the notebook (resumes from Standby).
8	Pointing stick	Moves the pointer and selects or activates items on the screen.
9	Microphone	Allows for audio input.

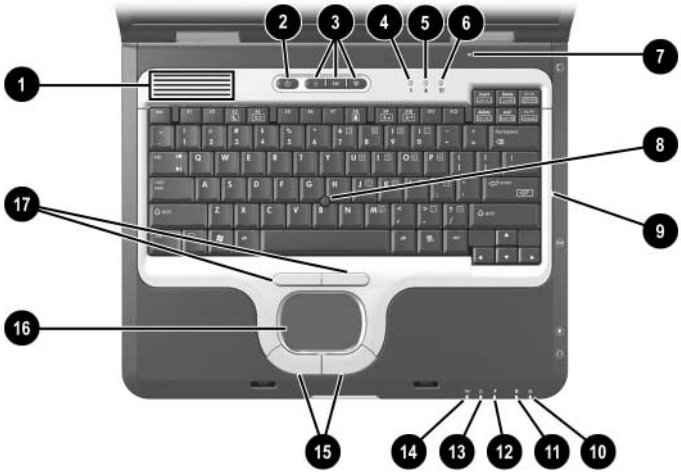

Top Components (Continued)

Table 1-7
Top Components *(Continued)*

Item	Component	Function
10	MultiBay light	On: A drive in the MultiBay is being accessed.
11	Drive light	On: One of the following integrated drives is being accessed: ■ Hard drive ■ Fixed optical drive
12	Battery light	On: A battery pack is charging. Blinking: A battery pack that is the only available power source has reached a low-battery condition. When the battery reaches a critical low-battery condition, the battery light begins blinking more quickly.
13	Power/Standby light	On: Power is turned on. Blinking: Notebook is in standby. ✎ The power/standby light also blinks when a battery pack that is the only available power source reaches a critical low-battery condition. The light turns off when the system enters hibernation or shuts down.
14	Wireless on/off light	On: An integrated wireless device has been enabled.
15	Left and right TouchPad buttons	Function like the left and right buttons on an external mouse.
16	TouchPad	Moves the pointer and selects or activates items on the screen. Can be set to perform other mouse functions, such as scrolling and double-clicking.
17	Left and right pointing stick buttons	Function like the left and right buttons on an external mouse.

The external components on the bottom of the notebook are shown below and described in Table 1-8.

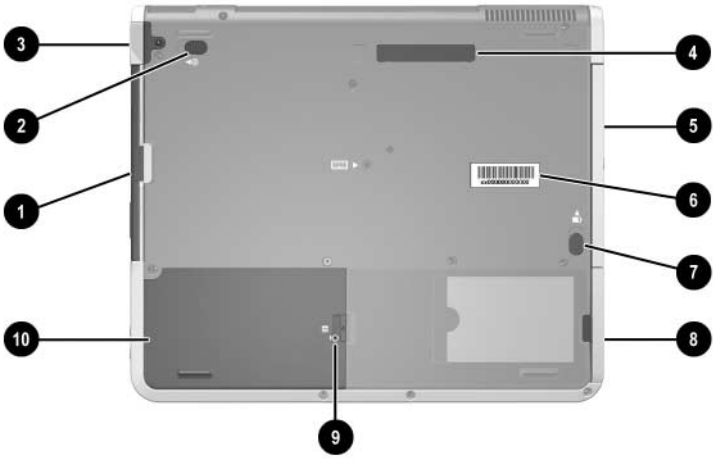

Bottom Components

Table 1-8
Bottom Components

Item	Component	Function
1	MultiBay	Supports an optional MultiBay device, such as a drive or battery pack.
2	MultiBay release latch	Allows removal of the MultiBay drive.
3	Bluetooth compartment	Holds a Bluetooth device. ✎ Bluetooth is not available in all countries.
4	Docking connector	Connects the notebook to an optional port replicator.
5	Optical disk drive	Reads and records CD and DVD media.
6	Serial number	Identifies the notebook. You need this number when calling customer support.
7	Battery pack release latch	Releases the primary battery pack from the battery bay.
8	Battery bay	Holds the primary battery pack. Battery pack ships outside the notebook.
9	Hard drive cover latch	Releases the cover on the hard drive bay.
10	Hard drive	Holds the primary hard drive.

1.6 Design Overview

This section presents a design overview of key parts and features of the notebook. Refer to Chapter 3, “Illustrated Parts Catalog” to identify replacement parts, and Chapter 5, “Removal and Replacement Procedures” for disassembly steps.

The system board provides the following device connections:

- Memory expansion board
- Mini PCI communications devices
- Hard drive
- Display
- Keyboard, TouchPad, and pointing stick
- Audio
- Intel Pentium M processor
- Fan
- PC Card
- MCD modem
- Bluetooth wireless LAN

CAUTION: To properly ventilate the notebook, allow at least a 7.6-cm (3-inch) clearance on the left and right sides of the notebook.

The notebook uses an electrical fan for ventilation. The fan is controlled by a temperature sensor and is designed to turn on automatically when high temperature conditions exist. These conditions are affected by high external temperatures, system power consumption, power management/battery conservation configurations, battery fast charging, and software applications. Exhaust air is displaced through the ventilation grill located on the left side of the notebook.

2

Troubleshooting

WARNING: Only authorized technicians trained by HP should repair this equipment. All troubleshooting and repair procedures are detailed to allow only subassembly/module-level repair. Because of the complexity of the individual boards and subassemblies, do not attempt to make repairs at the component level or modifications to any printed wiring board. Improper repairs can create a safety hazard. Any indication of component replacement or printed wiring board modification may void any warranty or exchange allowances.

2.1 Computer Setup and Diagnostics Utilities

The notebook features two system management utilities:

- **Computer Setup**—A system information and customization utility that can be used even when your operating system is not working or does not load. This utility includes settings that are not available in Microsoft Windows.
- **Diagnostics for Windows**—A system information and diagnostic utility that is used within the Windows operating system. Use this utility whenever possible to:
  - ❏ Display system information.
  - ❏ Test system components.
  - ❏ Troubleshoot a device configuration problem in Windows XP Professional or Windows XP Home.

It is not necessary to configure a device connected to a USB connector on the notebook or to an optional HP Port Replicator.

Using Computer Setup

Information and settings in Computer Setup are accessed from the File, Security, or Advanced menus:

1. Turn on or restart the notebook. Press **F10** while the F10 = ROM-Based Setup message is displayed in the lower left corner of the screen.
   - ❏ To change the language, press **F2**.
   - ❏ To view navigation information, press **F1**.
   - ❏ To return to the Computer Setup menu, press **esc**.
2. Select the **File**, **Security**, or **Advanced** menu.

3. To close Computer Setup and restart the notebook:
   - ❑ Select **File > Save Changes** and Exit and press **enter**.

   – or –

   - ❑ Select **File > Ignore Changes** and Exit and press **enter**.
4. When you are prompted to confirm your action, press **F10**.

Selecting from the File Menu

Table 2-1
File Menu

Select	To Do This
System Information	■ View identification information about the notebook, a Port Replicator, and any battery packs in the system. ■ View specification information about the processor, memory and cache size, and system ROM.
Save to Floppy	Save system configuration settings to a diskette.
Restore from Floppy	Restore system configuration settings from a diskette.
Restore Defaults	Replace configuration settings in Computer Setup with factory default settings. Identification information is retained.
Ignore Changes and Exit	Cancel changes entered during the current session, then exit and restart the notebook.
Save Changes and Exit	Save changes entered during the current session, then exit and restart the notebook.

Selecting from the Security Menu

Table 2-2
Security Menu

Select	To Do This
Setup Password	Enter, change, or delete a Setup password. The Setup password is called an administrator password in Computer Security, a program accessed from the Windows Control Panel.
Power-on Password	Enter, change, or delete a power-on password.
DriveLock Passwords	Enable/disable DriveLock; change a DriveLock User or Master password. ✎ DriveLock Settings are accessible only when you enter Computer Setup by turning on (not restarting) the notebook.
Password Options (Password options can be selected only when a power-on password has been set.)	Enable/disable: ■ QuickLock ■ QuickLock on Standby ■ QuickBlank ✎ To enable QuickLock on Standby or QuickBlank, you must first enable QuickLock.
Device Security	Enable/disable: ■ Ports or diskette drives* ■ Diskette write* ■ CD-ROM or diskette startup ✎ Settings for a DVD-ROM can be entered in the CD-ROM field.
System IDs	Enter identification numbers for the notebook, a Port Replicator, and all battery packs in the system.

*Not applicable to SuperDisk LS-120 drives.

Selecting from the Advanced Menu

Table 2-3
Advanced Menu

Select	To Do This
Language	Change the Computer Setup language.
Boot Options	Enable/disable: ■ QuickBoot, which starts the notebook more quickly by eliminating some startup tests. If you suspect a memory failure and want to test memory automatically during startup, disable QuickBoot. ■ MultiBoot, which sets a startup sequence that can include most bootable devices and media in the system.
Device Options	■ Enable/disable the embedded numeric keypad at startup. ■ Enable/disable multiple standard pointing devices at startup. To set the notebook to support only a single, usually nonstandard, pointing device at startup, select **Disable**. ■ Enable/disable USB legacy support for a USB keyboard. When USB legacy support is enabled, the keyboard works even when a Windows operating system is not loaded. ■ Set an optional external monitor or overhead projector connected to a video card in a Port Replicator as the primary device. When the notebook display is set as secondary, the notebook must be shut down before it is undocked from a Port Replicator.

Table 2-3
Advanced Menu *(Continued)*

Select	To Do This
Device Options *(continued)*	■ Change the parallel port mode from Enhanced Parallel Port (EPP, the default setting) to standard, bidirectional EPP, or Enhanced Capabilities Port (ECP). ■ Set video-out mode to NTSC (default), PAL, NTSC-J, or PAL-M.* ■ Enable/disable all settings in the Intel SpeedStep window. When Disable is selected, the notebook runs in Battery Optimized mode. ■ Specify how the notebook recognizes multiple identical Port Replicators that are identically equipped. Select **Disable** to recognize the Port Replicators as a single Port Replicator; select **Enable** to recognize the Port Replicators individually, by serial number. ■ Enable/disable the reporting of the processor serial number by the processor to the software.
HDD Self Test Options	Run a quick comprehensive self test on hard drives in the system that support the test features.

*Video modes vary even within regions. However, NTSC is common in North America; PAL, in Europe, Africa, and the Middle East; NTSC-J, in Japan; and PAL-M, in Brazil. Other South and Central American regions can use NTSC, PAL, or PAL-M.

2.2 Using Diagnostics for Windows

When you access Diagnostics for Windows, a scan of all system components is displayed on the screen before the diagnostics window opens.

You can display more or less information from anywhere within Diagnostics for Windows by selecting Level on the menu bar.

Diagnostics for Windows is designed to test HP components. If HP components are tested, the results might be inconclusive.

Obtaining, Saving, or Printing Configuration Information

1. Access Diagnostics for Windows by selecting **Start > Settings > Control Panel > Diagnostics for Windows**.
2. Select **Categories**, then select a category from the drop-down list.
   - ❏ To save the information, select **File > Save As**.
   - ❏ To print the information, select **File > Print**.
3. To close Diagnostics for Windows, select **File > Exit**.

Obtaining, Saving, or Printing Diagnostic Test Information

1. Access Diagnostics for Windows by selecting **Start > Settings > Control Panel > Diagnostics for Windows**.
2. Select the **Test** tab.
3. In the scroll box, select the category or device you want to test.
4. Select a test type:
   - ❏ **Quick Test**—Runs a quick, general test on each device in a selected category.
   - ❏ **Complete Test**—Performs maximum testing on each device in a selected category.
   - ❏ **Custom Test**—Performs maximum testing on a selected device.
     - ◆ To run all tests for your selected device, select the **Check All** button.
     - ◆ To run only the tests you select, select the **Uncheck All** button, then select the check box for each test you want to run.
5. Select a test mode:
   - ❏ **Interactive Mode**—Provides maximum control over the testing process. You determine whether the test was passed or failed. You might be prompted to insert or remove devices.
   - ❏ **Unattended Mode**—Does not display prompts. If errors are found, they are displayed when testing is complete.

6. Select the **Begin Testing** button.
7. Select a tab to view a test report:
   - ❏ **Status tab**—Summarizes the tests run, passed, and failed during the current testing session.
   - ❏ **Log tab**—Lists tests run on the system, the number of times each test has run, the number of errors found on each test, and the total run time of each test.
   - ❏ **Error tab**—Lists all errors found in the notebook, along with the corresponding error codes.
8. Select a tab to save the report:
   - ❏ **Log tab**—Select the Save button.
   - ❏ **Error tab**—Select the Save button.
9. Select a tab to print the report:
   - ❏ **Log tab**—Select File > Save As, and then print the file from your folder.

2.3 Troubleshooting Flowcharts

Table 2-4
Troubleshooting Flowcharts Overview

Flowchart	Description
2.1	“Flowchart 2.1—Initial Troubleshooting”
2.2	“Flowchart 2.2—No Power, Part 1”
2.3	“Flowchart 2.3—No Power, Part 2”
2.4	“Flowchart 2.4—No Power, Part 3”
2.5	“Flowchart 2.5—No Power, Part 4”
2.6	“Flowchart 2.6—No Video, Part 1”
2.7	“Flowchart 2.7—No Video, Part 2”
2.8	“Flowchart 2.8—Nonfunctioning Port Replicator”
2.9	“Flowchart 2.9—No OS Loading”
2.10	“Flowchart 2.10—No OS Loading, Hard Drive, Part 1”
2.11	“Flowchart 2.11—No OS Loading, Hard Drive, Part 2”
2.12	“Flowchart 2.12—No OS Loading, Hard Drive, Part 3”
2.13	“Flowchart 2.13—No OS Loading, Diskette Drive”
2.14	“Flowchart 2.14—No OS Loading, CD- or DVD-ROM Drive”
2.15	“Flowchart 2.15—No Audio, Part 1”
2.16	“Flowchart 2.16—No Audio, Part 2”
2.17	“Flowchart 2.17—Nonfunctioning Device”
2.18	“Flowchart 2.18—Nonfunctioning Keyboard”
2.19	“Flowchart 2.19—Nonfunctioning Pointing Device”
2.20	“Flowchart 2.20—No Network/Modem Connection”

Flowchart 2.1—Initial Troubleshooting

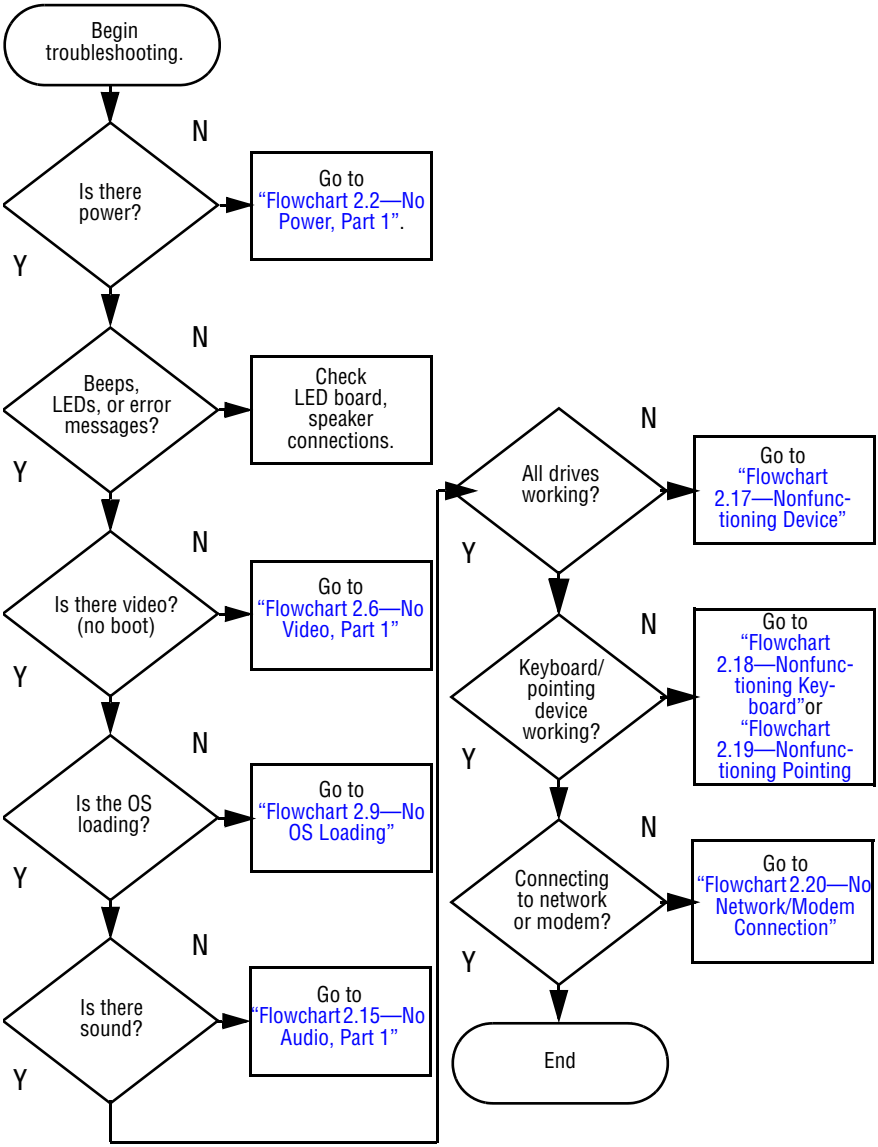

Flowchart 2.2—No Power, Part 1

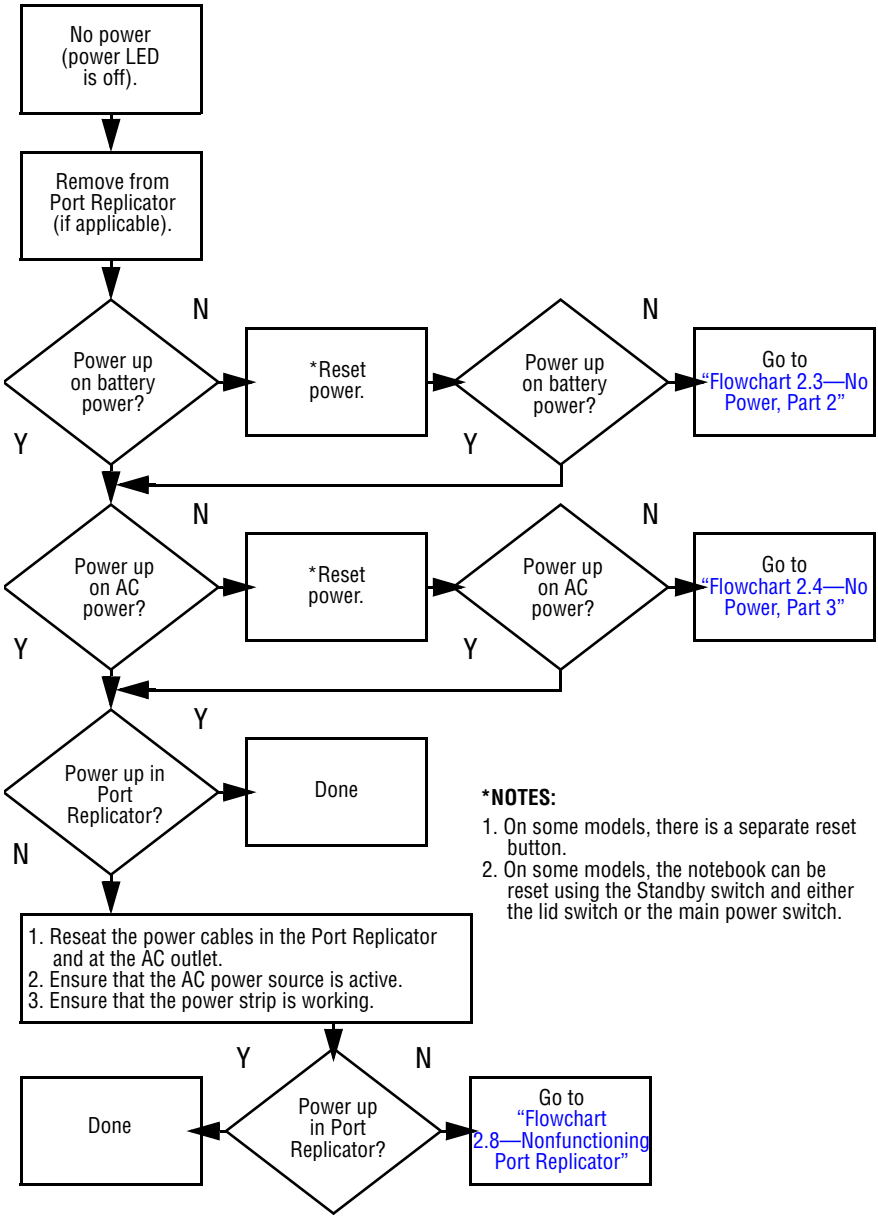

***NOTES:**

1. On some models, there is a separate reset button.
2. On some models, the notebook can be reset using the Standby switch and either the lid switch or the main power switch.

Flowchart 2.3—No Power, Part 2

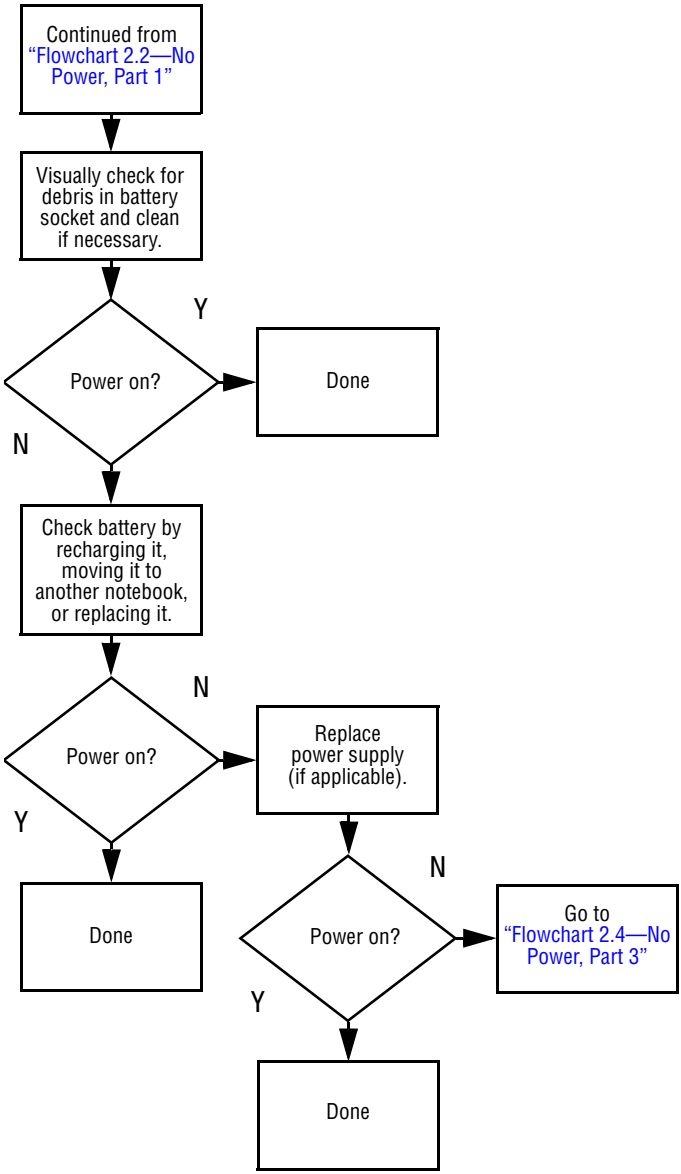

Flowchart 2.4—No Power, Part 3

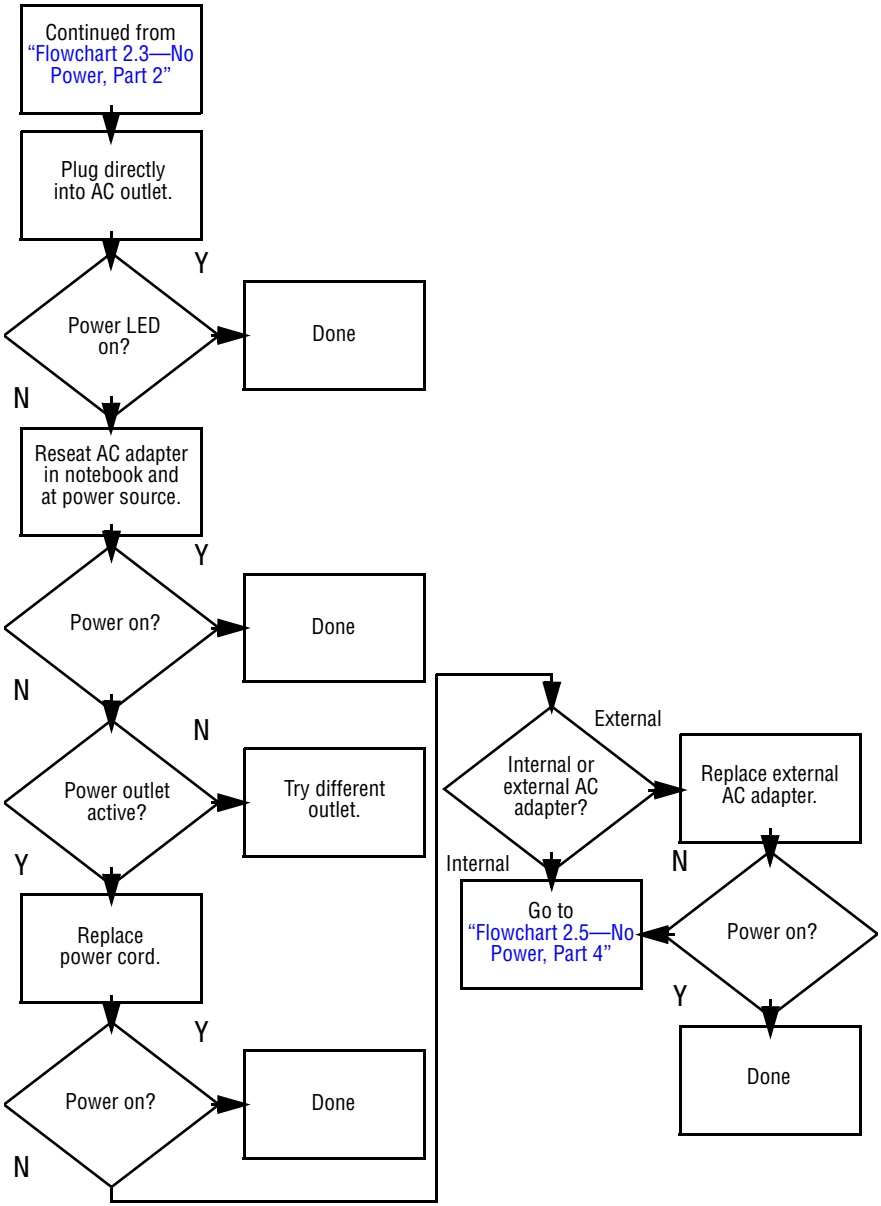

Flowchart 2.5—No Power, Part 4

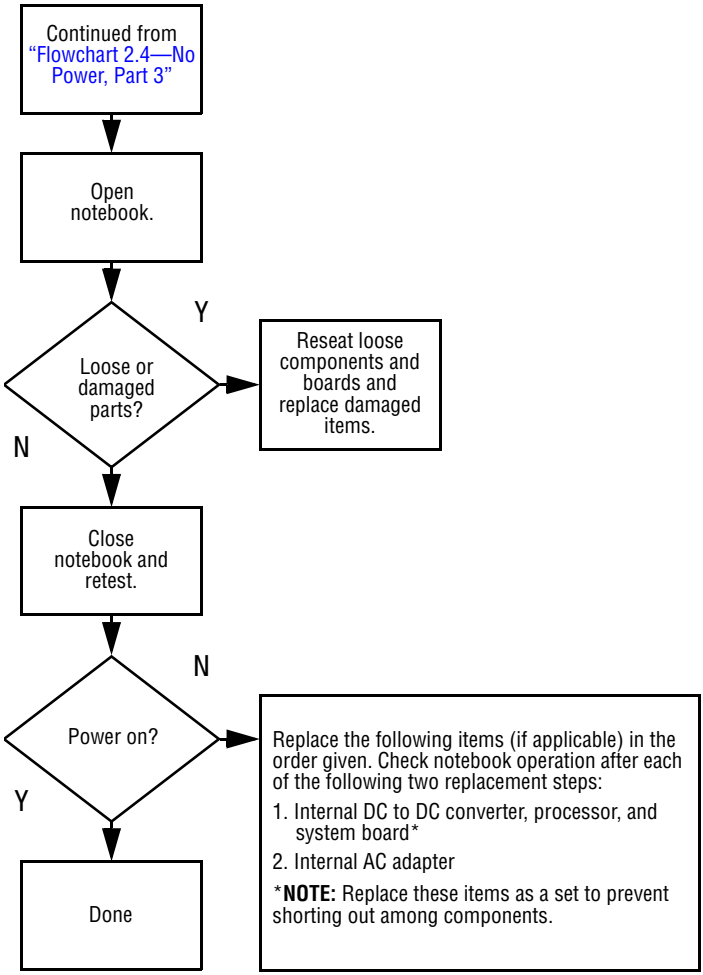

Flowchart 2.6—No Video, Part 1

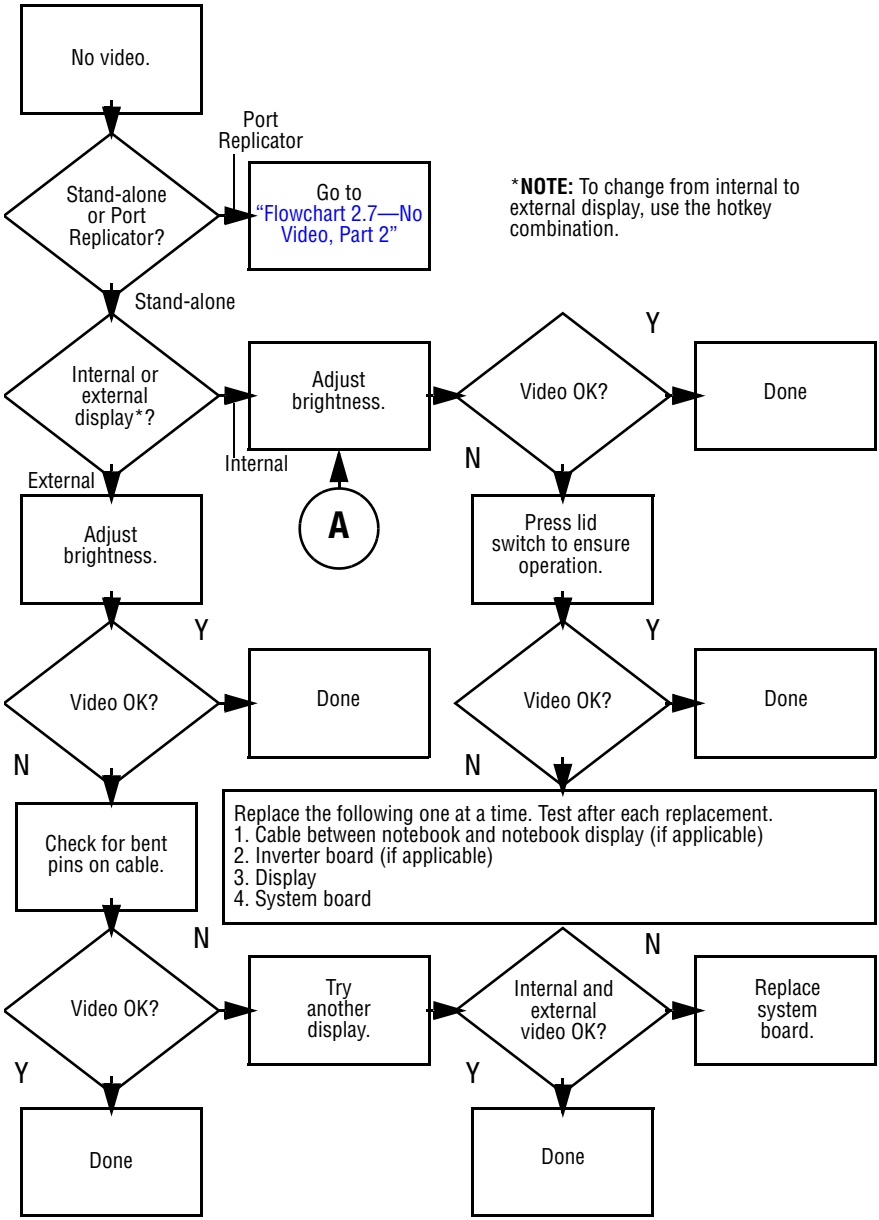

Flowchart 2.7—No Video, Part 2

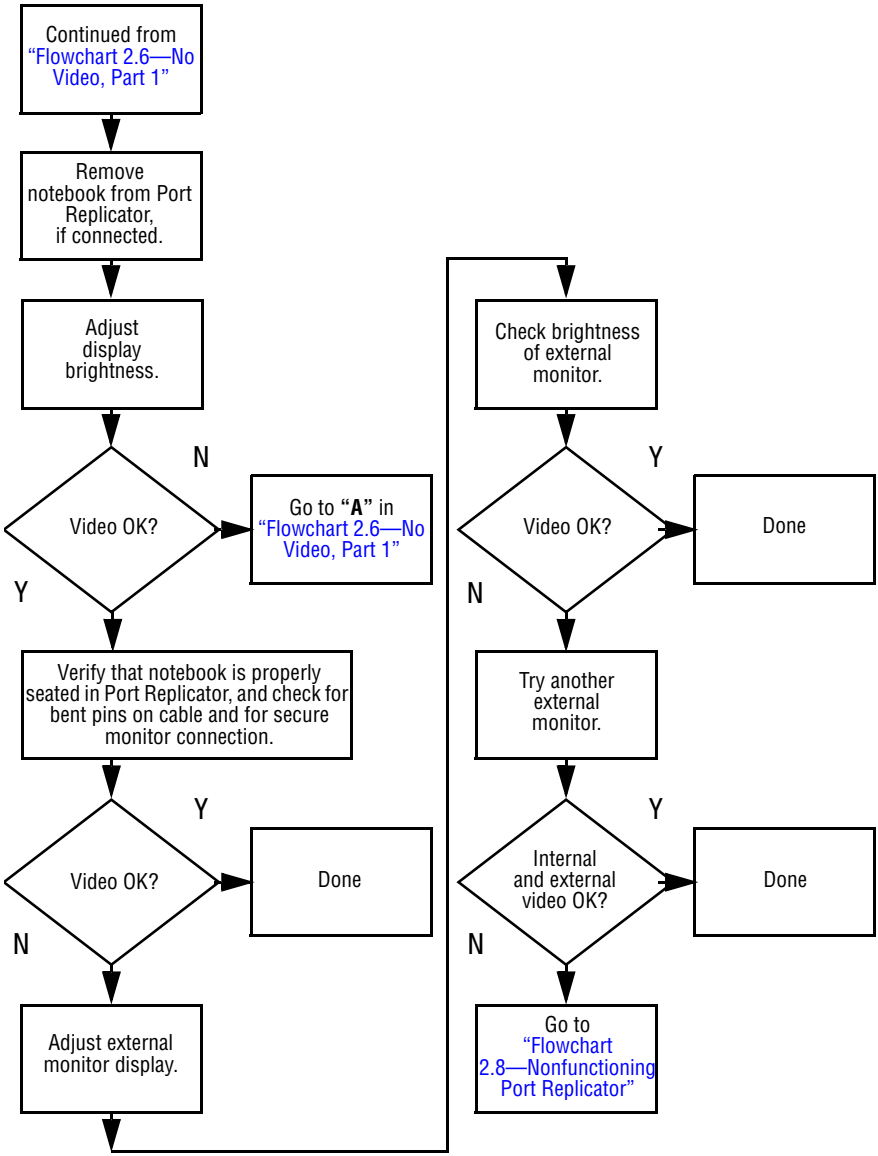

Flowchart 2.8—Nonfunctioning Port Replicator

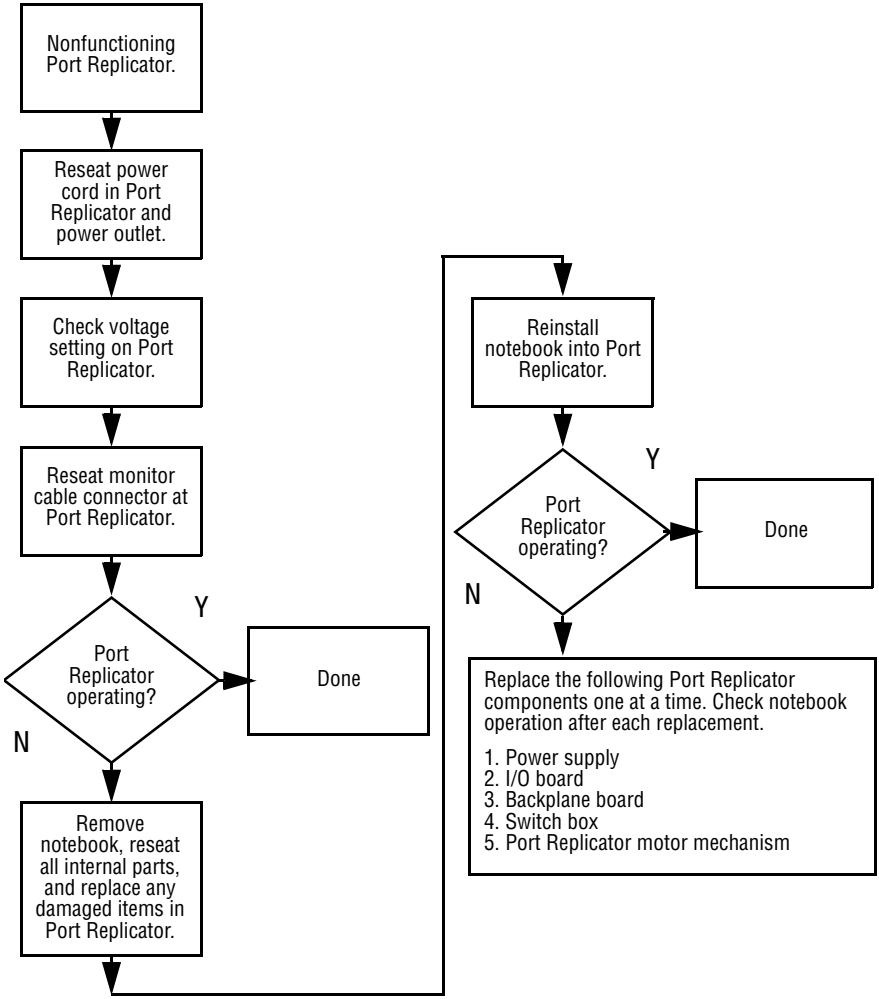

Flowchart 2.9—No OS Loading

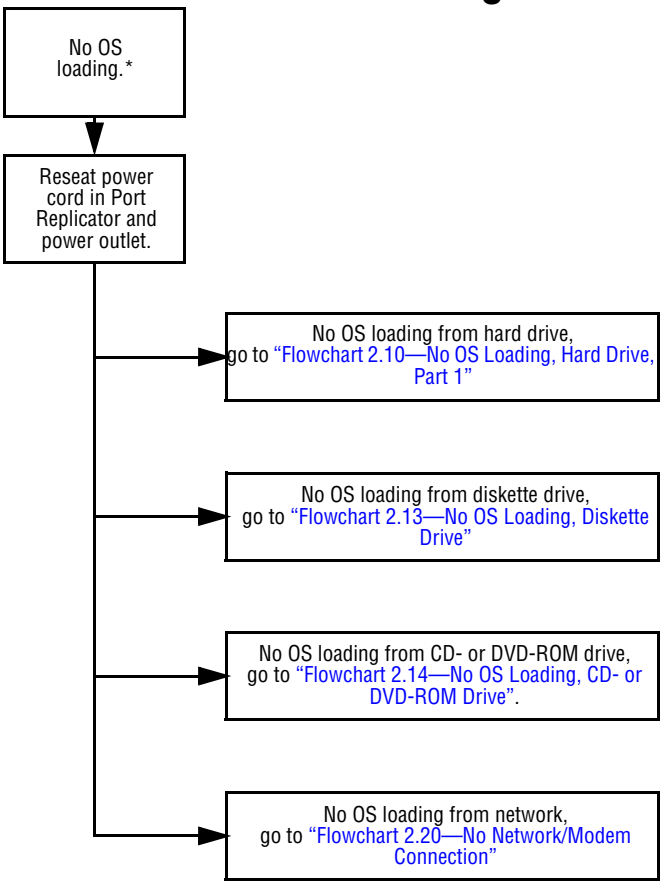

***NOTE:** Before beginning to troubleshoot, always check cable connections, cable ends, and drives for bent or damaged pins.

Flowchart 2.10—No OS Loading, Hard Drive, Part 1

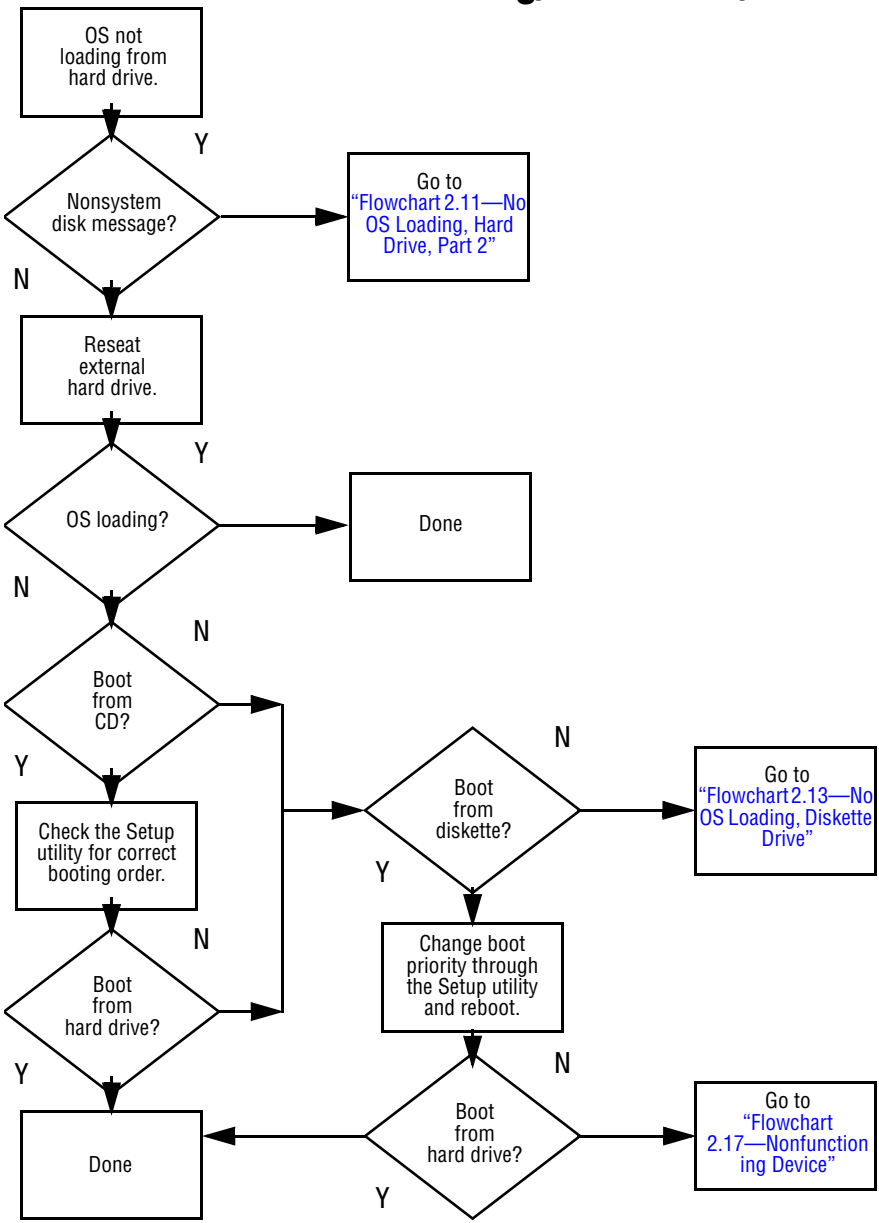

Flowchart 2.11—No OS Loading, Hard Drive, Part 2

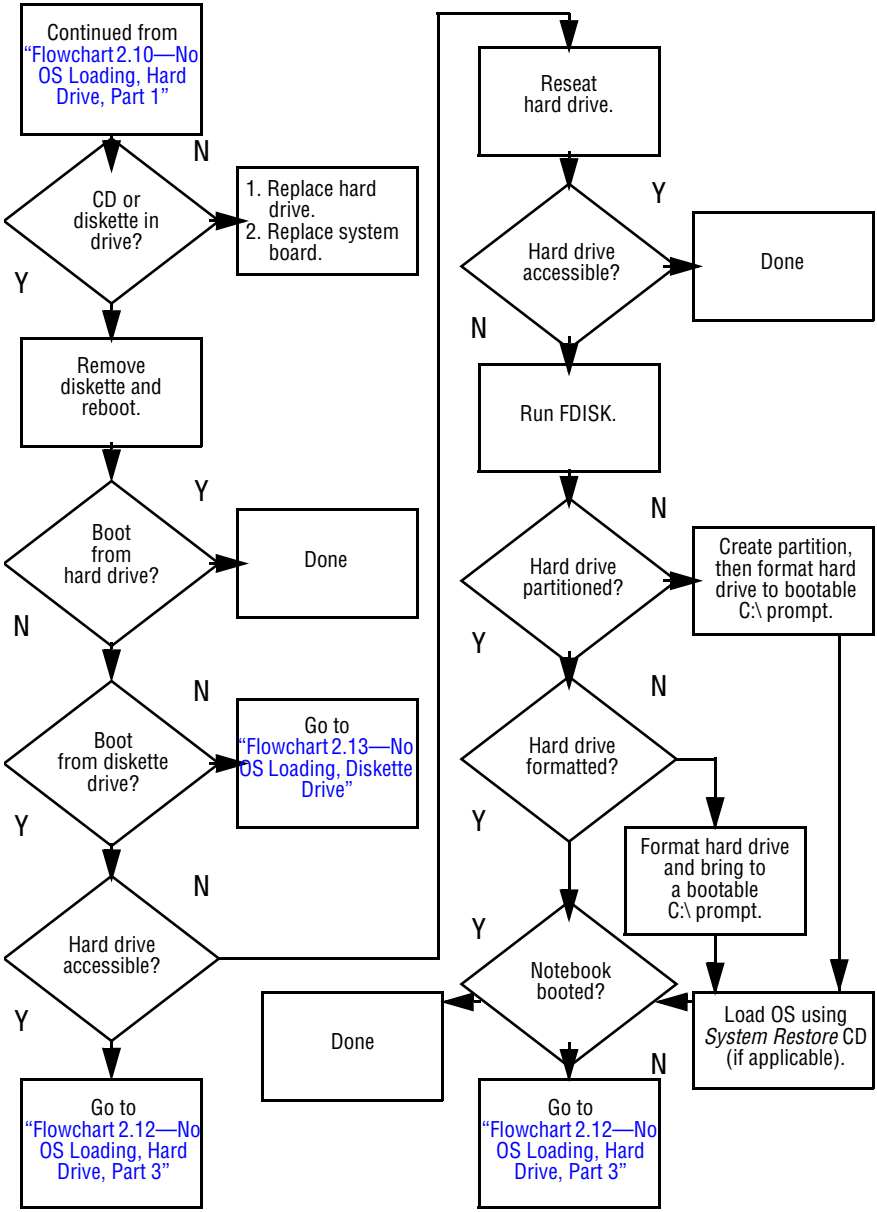

Flowchart 2.12—No OS Loading, Hard Drive, Part 3

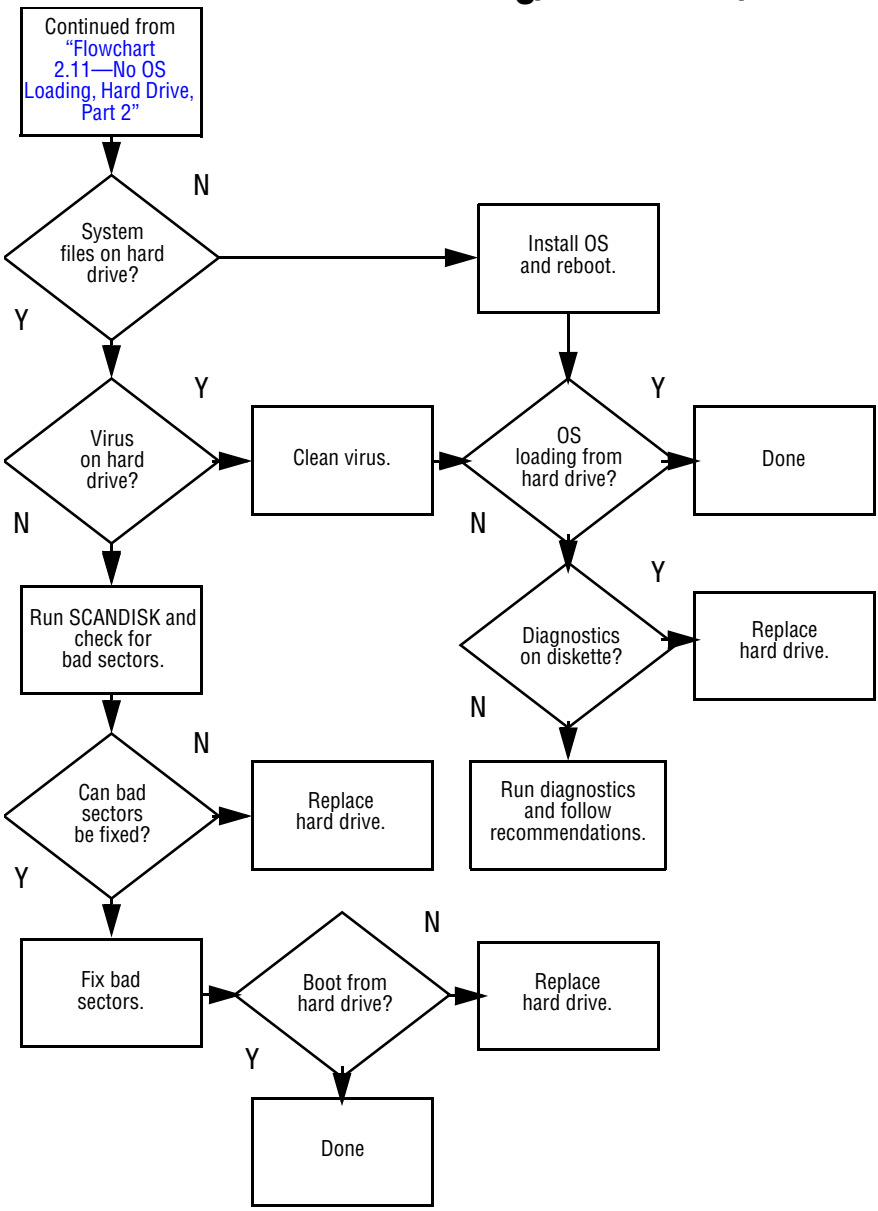

Flowchart 2.13—No OS Loading, Diskette Drive

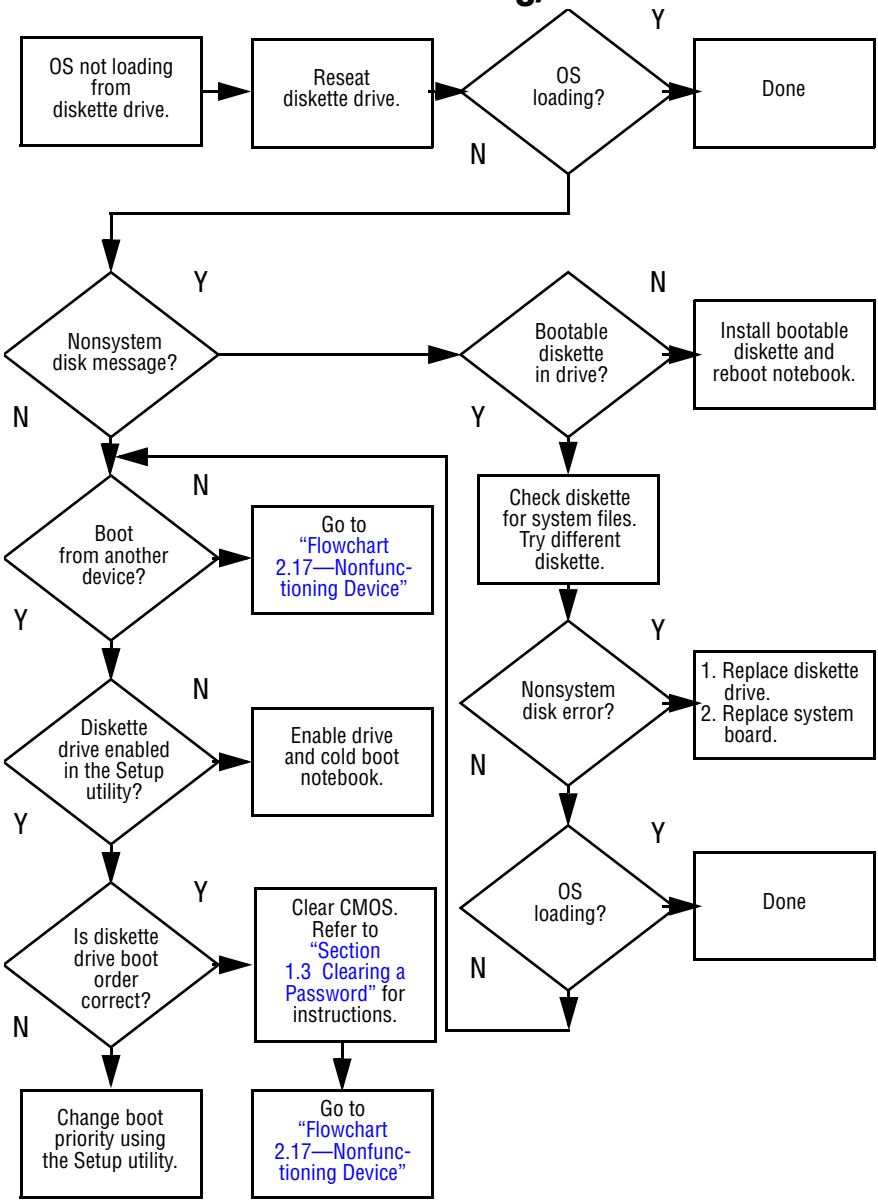

Flowchart 2.14—No OS Loading, CD- or DVD-ROM Drive

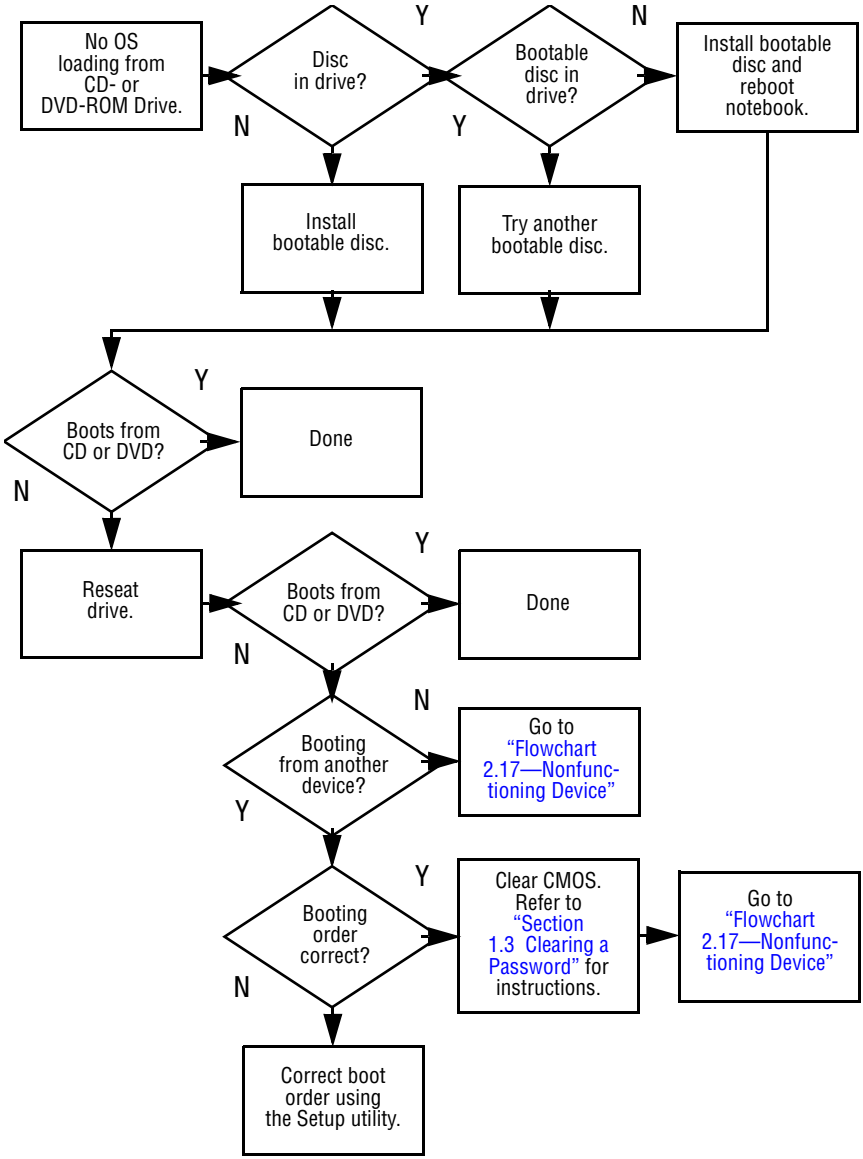

Flowchart 2.15—No Audio, Part 1

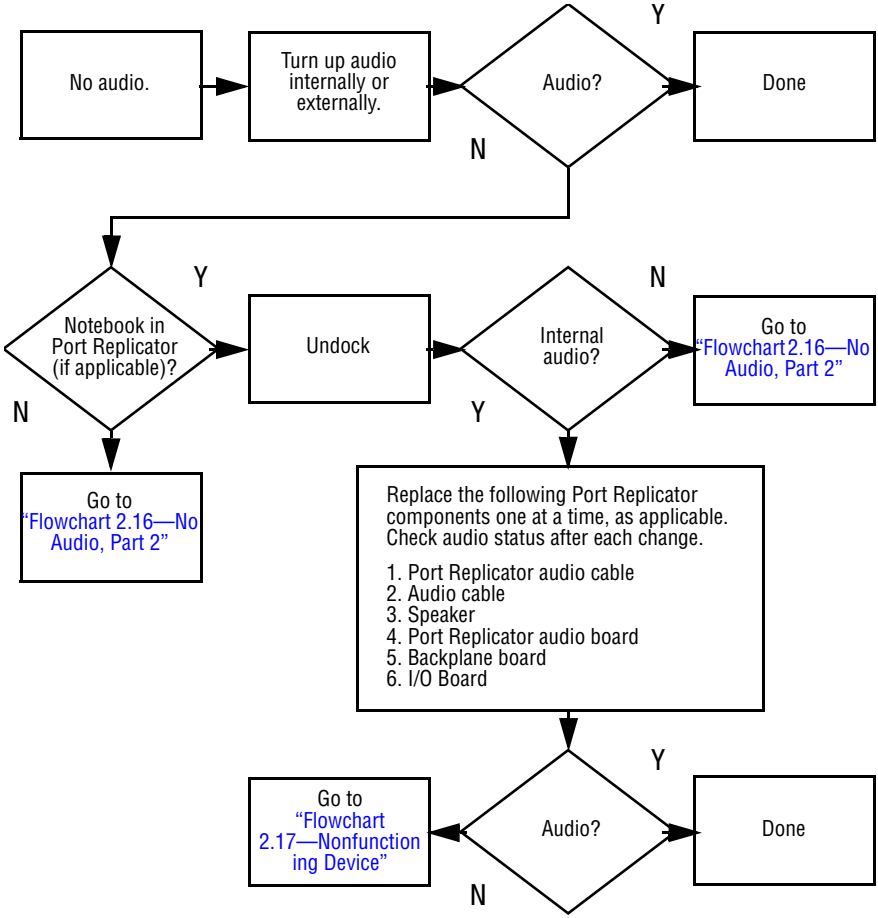

Flowchart 2.16—No Audio, Part 2

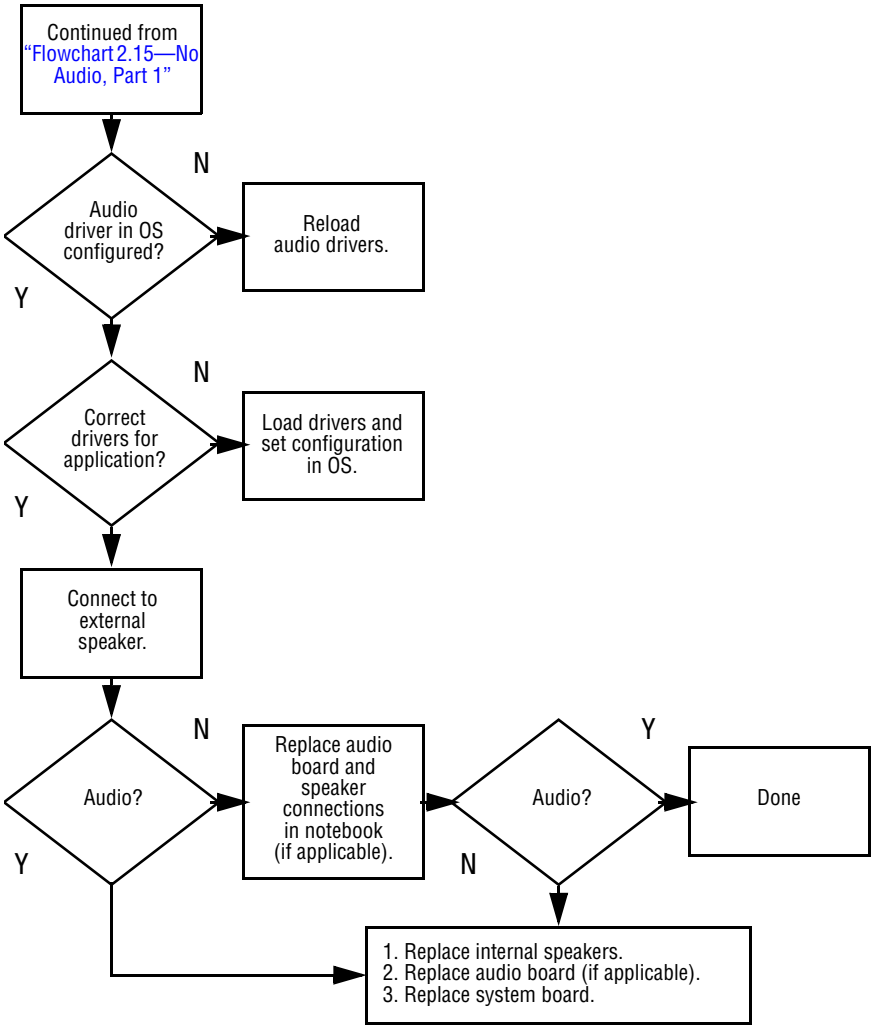

Flowchart 2.17—Nonfunctioning Device

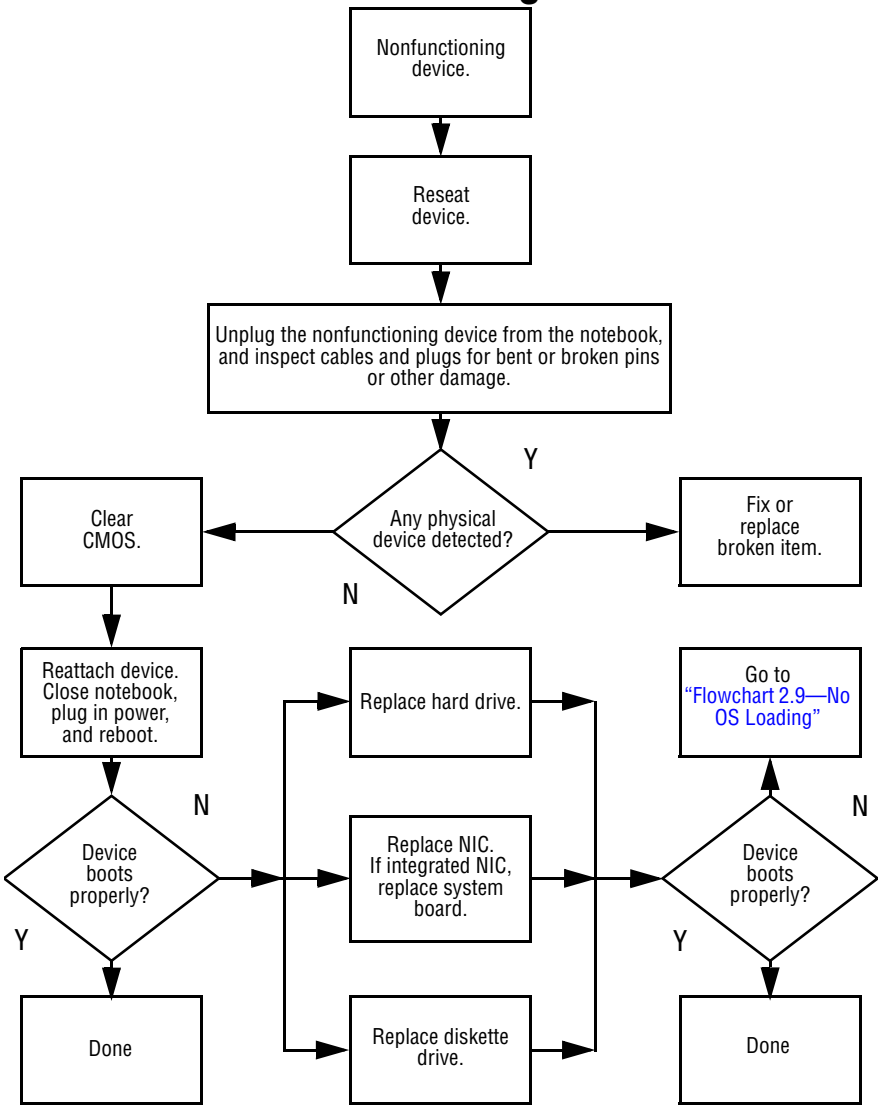

Flowchart 2.18—Nonfunctioning Keyboard

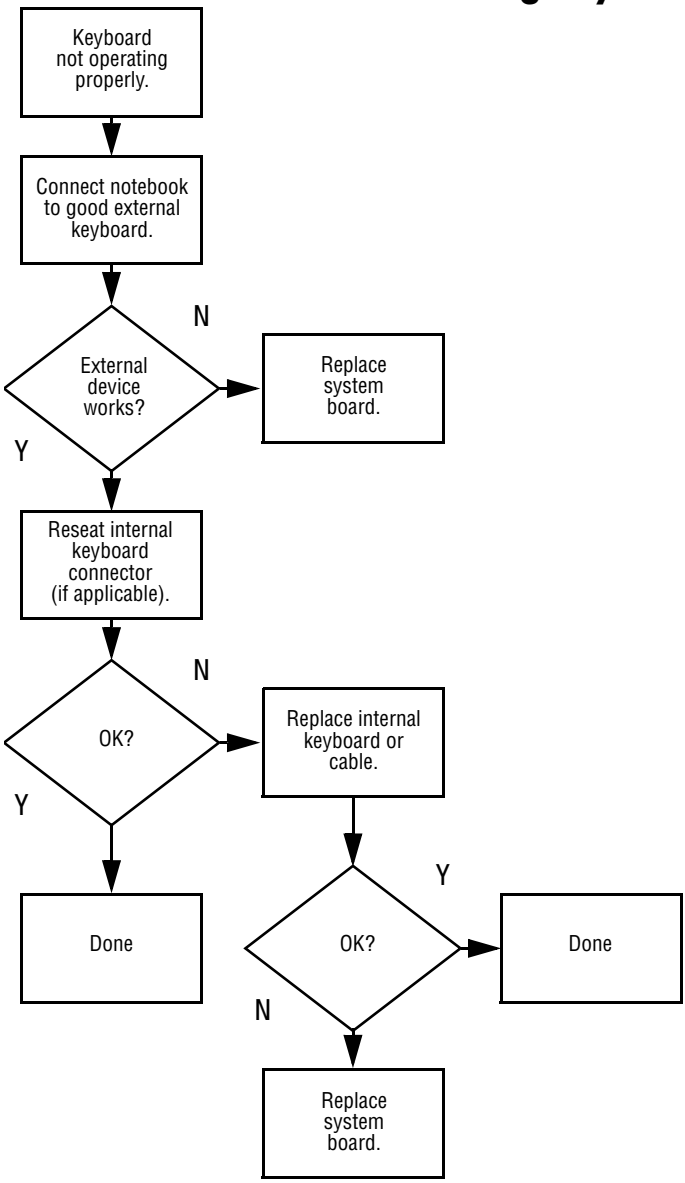

Flowchart 2.19—Nonfunctioning Pointing Device

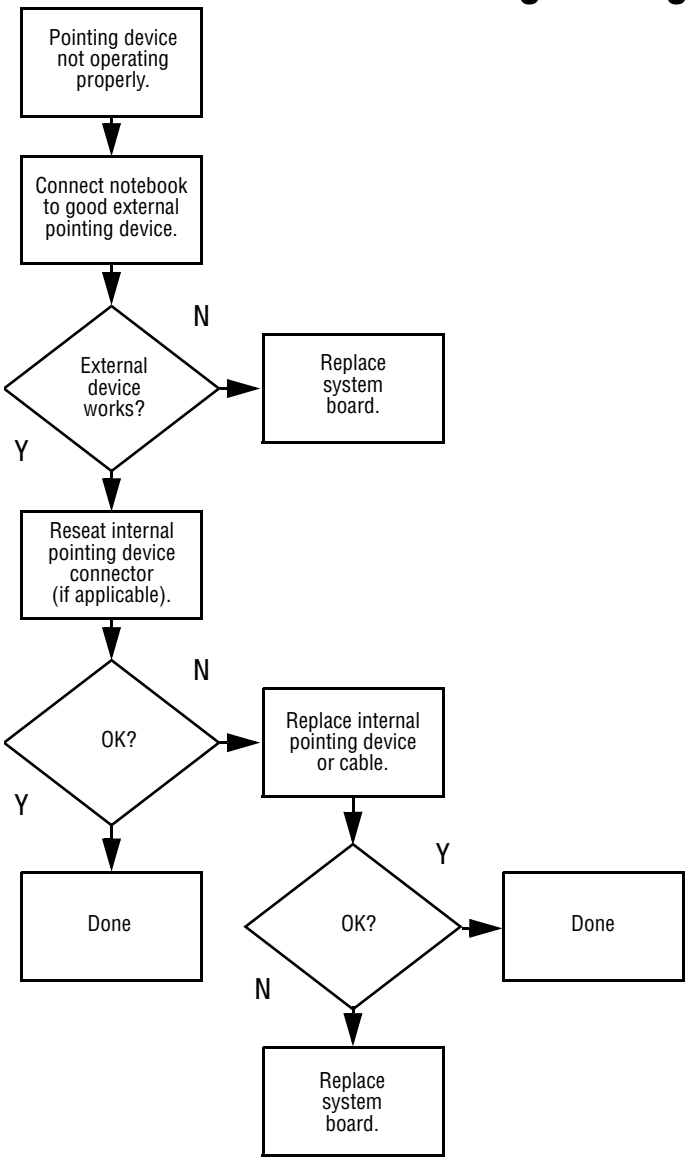

Flowchart 2.20—No Network/Modem Connection

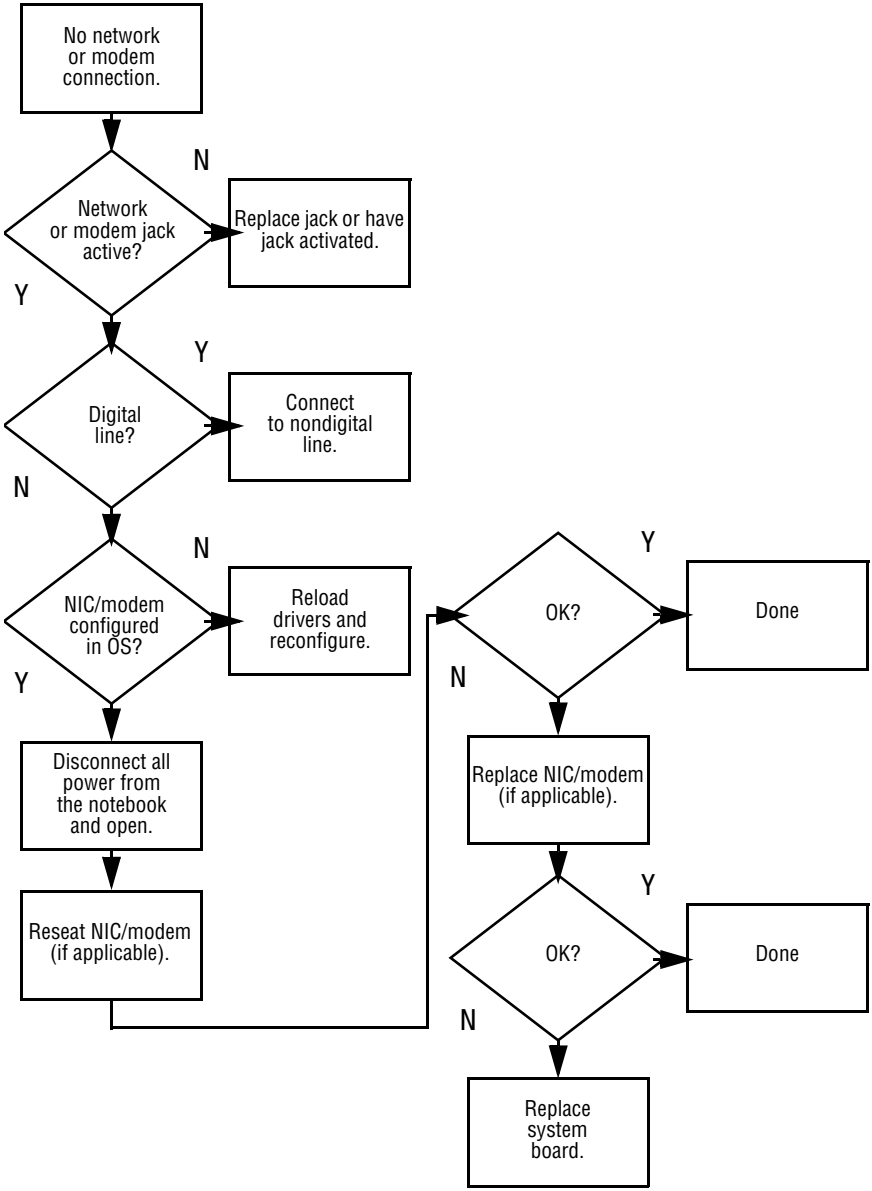

3

Illustrated Parts Catalog

This chapter provides an illustrated parts breakdown and a reference for spare part numbers and option part numbers.

3.1 Serial Number Location

When ordering parts or requesting information, provide the notebook serial number and model number located on the bottom of the notebook.

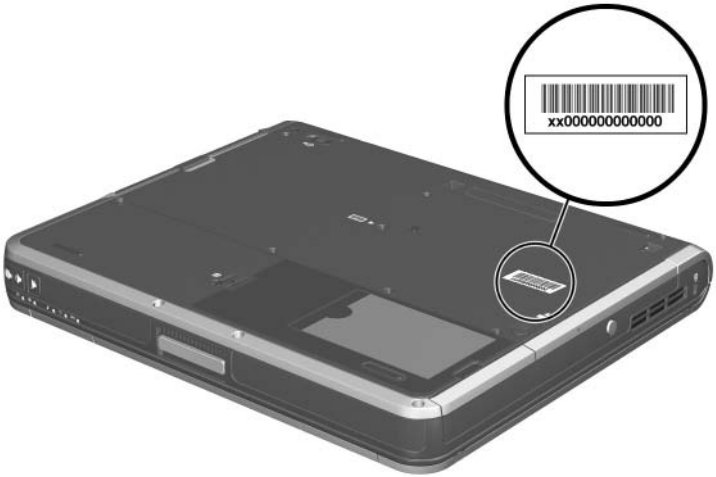

Serial Number Location

3.2 Notebook Major Components

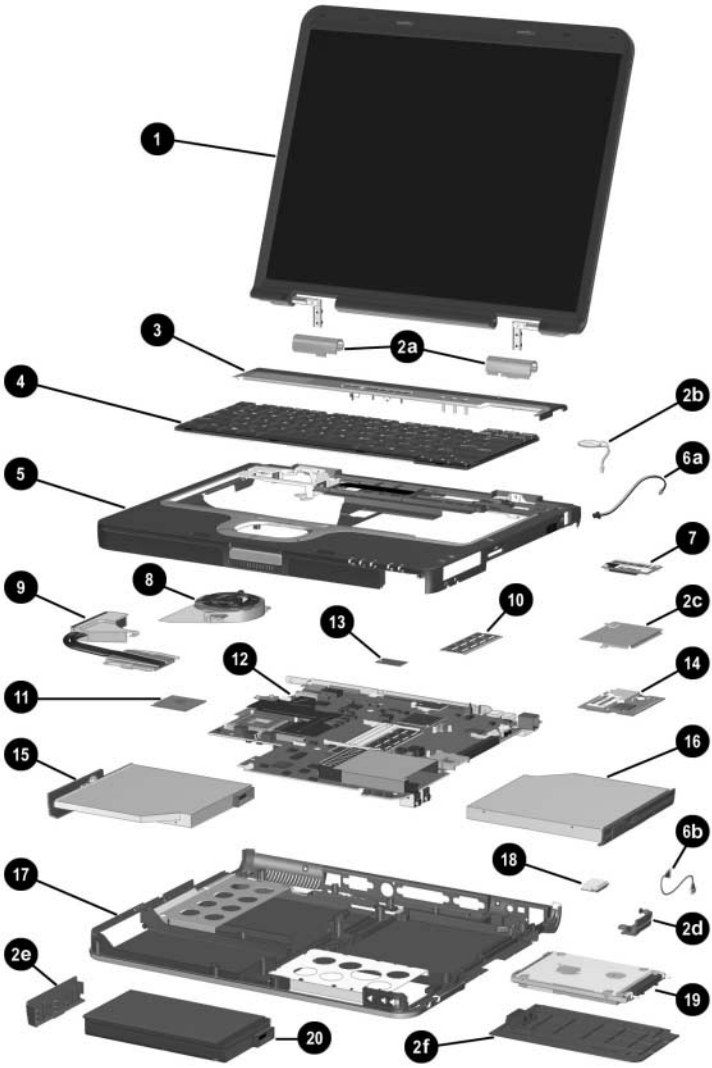

Notebook Major Components

Table 3-1
Spare Parts: Notebook Major Components

Item	Description	Spare Part Number
1	**Display assemblies**	
	15.0-inch, UXGA+, TFT	345060-001
	15.0-inch, SXGA+, TFT	345059-001
	15.0-inch, XGA, TFT	345058-001
	Miscellaneous Plastics Kit, includes:	345066-001
2a	Left and right display hinges	
2b	RTC battery	
2c	Mini PCI communications board shield	
2d	Bluetooth cover	
2e	Battery bezel	
2f	Hard drive cover	
	Not illustrated:	
	Notebook feet (4)	
3	**LED switch cover**	345063-001
4	**Keyboards** (include pointing stick)	
	Brazil 341520-201	
	Czech Republic 341520-221	
	Denmark 341520-081	
	Europe 341520-A41	
	France 341520-051	
	French Canada 341520-121	
	Germany 341520-041	
	Greece 378539-151	
	Greece - Blk 373646-151	
	Hungary 341520-211	
	Iceland 341520-DD1	
	International 341520-B31	
	Israel 341520-BB1	
	Italy 341520-061	
	Japan 341520-291	
	Korea 341520-AD1	
	Latin America 341520-161	
	Norway 341520-091	
	Portugal 341520-131	
	Russia 341520-251	
	Saudi Arabia 341520-171	
	Slovenia 341520-BA1	
	Spain 341520-071	
	Sweden/Finland 341520-B71	
	Switzerland 341520-BG1	
	Taiwan 341520-AB1	
	Thailand 341520-281	
	Turkey 341520-141	
	United Kingdom 341520-031	
	United States 341520-001	
5	**Top cover** (includes TouchPad and speaker)	345061-001

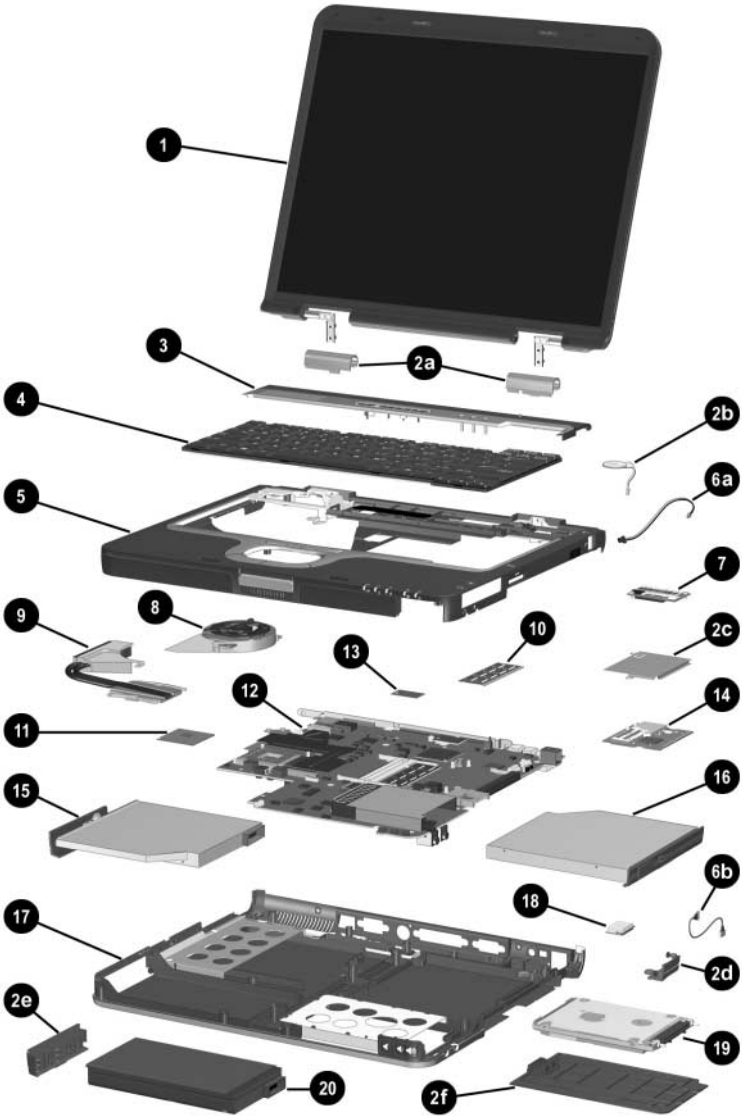

Notebook Major Components (Continued)

Table 3-1
Spare Parts: Notebook Major Components *(Continued)*

Item	Description	Spare Part Number
	Miscellaneous Cable Kit, includes:	345056-001
6a	Modem cable	
6b	Bluetooth cable	
7	**Modem board**	325521-001
8	**Fan assembly**	345065-001
9	**Heat sink** (includes grease)	345067-001
10	**Memory expansion boards, 333-MHz**	
	1024-MB (1.0-GB)	336579-001
	512-MB	336578-001
	256-MB	336577-001
11	**Processors** (include thermal grease)	
	Intel Pentium M (Banias) processor, 1.7 GHz	340165-001
	Intel Pentium M (Banias) processor, 1.6 GHz	319777-001
	Intel Pentium M (Banias) processor, 1.5 GHz	319776-001
	Intel Pentium M (Banias) processor, 1.4 GHz	319775-001
	Intel Pentium M (Dothan) processor, 1.5 GHz	359636-001
	Intel Pentium M (Dothan) processor, 1.6 GHz	356596-001
	Intel Pentium M (Dothan) processor, 1.7 GHz	356597-001
	Intel Pentium M (Dothan) processor, 1.8 GHz	345857-001
	Intel Pentium M (Dothan) processor, 2.0 GHz	353395-001
12	**System boards** (include thermal grease)	
	With 128 MB of video memory	349206-001
	With 64 MB of video memory	345064-001
13	**Trusted Platform Module (TPM)**	345856-001
*	**Integrated smart card**	379336-001

*Not illustrated.

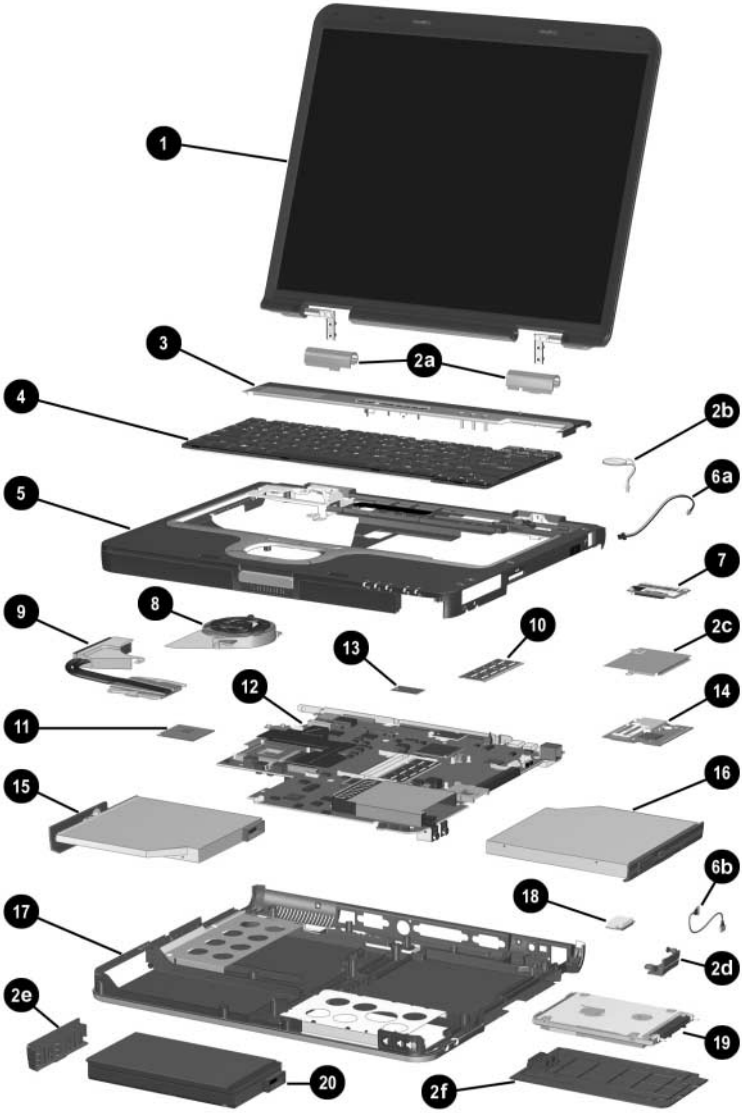

Notebook Major Components (Continued)

Table 3-1
Spare Parts: Notebook Major Components *(Continued)*

Item	Description	Spare Part Number
14	**Mini PCI communications boards**	
	802.11a/b/g LAN NIC	325525-001
	802.11b/g LAN NIC	325526-001
	802.11b W500 modem board (for use in Japan)	339742-291
	802.11b wireless LAN (MOW)	345641-001
	802.11b wireless LAN (ROW)	345640-001
	802.11b/g wireless modem (MOW)	368247-001
	802.11b/g wireless modem (ROW)	368248-001
15	**Optical drives**	
	24X Max DVD+RW/R and CD-RW Combo Drive	349242-001
	8X Max DVD-ROM Drive	349241-001
	24X Max DVD/CD-RW Combo Drive	349243-001
	24X Max CD-ROM Drive	349240-001
16	**MultiBay devices**	
	1.44-MB diskette drive	241995-001
	24X Max CD-ROM Drive	228746-001
	8X Max Slim DVD+RW/R and CD-RW Combo Drive	251292-001
	4X Max Reg DVD+RW/R and CD-RW Combo Drive	344256-001
17	**Base enclosure** (includes optical drive shield, hard drive shield, and four notebook feet)	345062-001
18	**Bluetooth board** (includes Bluetooth cable, item 6b)	348277-001
19	**Hard drives** (includes hard drive bezel and frame)	
	80-GB 5400-rpm (all models)	345632-001
	60-GB 5400-rpm (all models)	345631-001
	40-GB 5400-rpm (all models)	345630-001
	60-GB 7200-rpm (nw8000 only)	345855-001
20	**Battery pack, 8-cell, 4.4 Wh, Li-Ion**	338669-001
*	**Battery pack, 8-cell, 4.8AHR**	360663-001

Table 3-1
Spare Parts: Notebook Major Components

Item	Description	Spare Part Number
*Not illustrated.		

3.3 Miscellaneous Plastics Kit Components

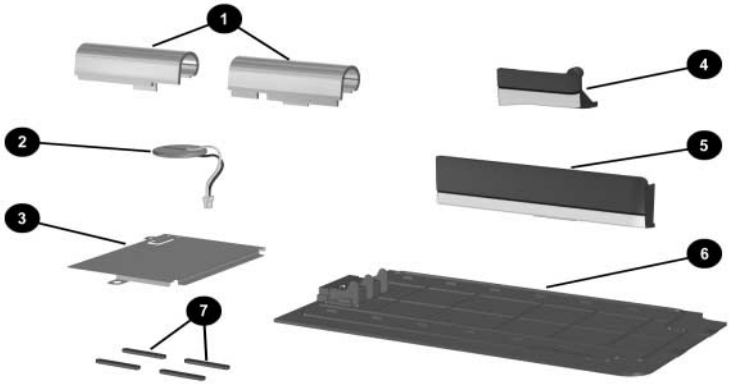

Miscellaneous Plastics Kit Components

Table 3-2
Miscellaneous Plastics Kit Components
Spare Part Number 345066-001

Item	Description
1	Left and right display hinges
2	RTC battery
3	Mini PCI communications board shield
4	Bluetooth cover
5	Battery bezel
6	Hard drive cover
7	Notebook feet (4)
*	Integrated smart card bezel

*Not illustrated.

3.4 Miscellaneous Cable Kit Components

Miscellaneous Cable Kit Components

Table 3-3
Miscellaneous Cable Kit Components
Spare Part Number 345056-001

Item	Description
1	Bluetooth cable
2	Modem cable

3.5 Mass Storage Devices

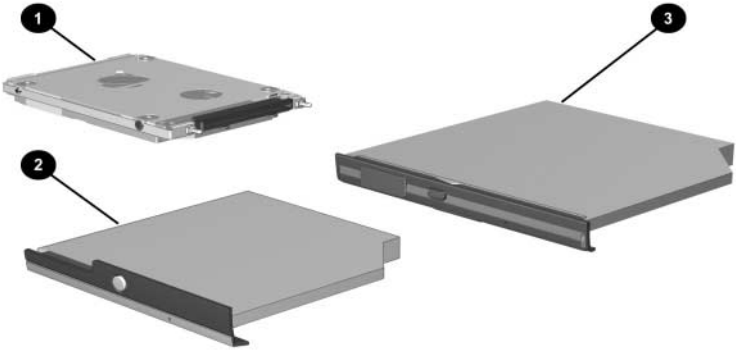

Mass Storage Devices

Table 3-4
Mass Storage Devices
Spare Part Number Information

Item	Description		Spare Part Number
1	**Hard drives** (includes hard drive bezel and frame)		
	80-GB 5400-rpm	(all models)	345632-001
	60-GB 5400-rpm	(all models)	345631-001
	40-GB 5400-rpm	(all models)	345630-001
	60-GB 7200-rpm	(nw8000 only)	345855-001

Table 3-4
Mass Storage Devices
Spare Part Number Information *(Continued)*

Item	Description	Spare Part Number
2	**Optical drives**	
	24X Max DVD+RW/R and CD-RW Combo Drive	349242-001
	8X Max DVD-ROM Drive	349241-001
	24X Max DVD/CD-RW Combo Drive	349243-001
	24X Max CD-ROM Drive	349240-001
3	**MultiBay devices**	
	1.44-MB diskette drive	135233-001
	24X Max CD-ROM Drive	228746-001
	8X Max Slim DVD/R+W and CD-RW Combo Drive	251292-001
	4X Max Regular DVD/R+W and CD-RW Combo Drive	344256-001

3.6 Miscellaneous

Table 3-5
Spare Parts: Miscellaneous (not illustrated)

Description	Spare Part Number
AC adapters	
90-W, PFC	239705-001
65-W	239704-001
Carrying cases	
Leather top load, Samsung	325817-001
Leather top load, SG	325817-002
Nylon top load, Samsung	325815-001
Nylon top load, SG	325815-002
Nylon entry level	325814-001
Port replicators	
Advanced Port Replicator	339096-001
Common Port Replicator	339097-001
Power cords	
Australia	246959-011
Brazil	246959-201
Denmark	246959-081
Europe/Middle East/Africa	246959-021
Israel	246959-BB1
Italy	246959-061
Japan	246959-291
Korea	246959-AD1
Switzerland	246959-AG1
United Kingdom	246959-031
United States	246959-001
Screw Kit (includes the following screws; refer to Appendix C, “Screw Listing” for more information on screw specifications and usage.)	345057-001

- Torx T8M2.0×6.0 screw
- Torx T8M2.0×4.0 screw
- Torx T5M2.5×4.0 screw
- Torx T8M2.0×3.5 screw
- Phillips PM3.0×3.5 screw
- Phillips PM1.5×4.0 screw
- Phillips PM1.5×3.0 screw
- M2.0×10.0 alignment pin

3.7 Sequential Part Number Listing

Table 3-6
Spare Parts: Sequential Part Number Listing

Spare Part Number	Description
228746-001	24X Max CD-ROM drive
239704-001	65-watt AC adapter
239705-001	90-watt, PFC, AC adapter
241995-001	Diskette drive
246959-001	3-wire power cord - United States
246959-011	3-wire power cord - Australia
246959-021	3-wire power cord - Europe, Middle East, Africa
246959-031	3-wire power cord - United Kingdom
246959-061	3-wire power cord - Italy
246959-081	3-wire power cord - Denmark
246959-201	3-wire power cord - Brazil
246959-291	3-wire power cord - Japan
246959-AD1	3-wire power cord - Korea
246959-AG1	3-wire power cord - Switzerland
246959-BB1	3-wire power cord - Israel
251292-001	8X Max Slim DVD+RW/R and CD-RW combo drive
319775-001	Intel Pentium M (Banias) processor, 1.4-GHz
319776-001	Intel Pentium M (Banias) processor, 1.5-GHz
319777-001	Intel Pentium M (Banias) processor, 1.6-GHz
325521-001	Modem board (includes cable)
325525-001	802.11a/b/g LAN board mini PCI communications board

Table 3-6
Spare Parts: Sequential Part Number Listing *(Continued)*

Spare Part Number	Description
325526-001	802.11b/g LAN board mini PCI communications board
325814-001	Nylon, entry level
325815-001	Nylon, top load, Samsung
325815-002	Nylon, top load, SG
325817-001	Leather, top load, Samsung
325817-002	Leather, top load, SG
336577-001	Memory expansion board, 333 MHz, 256-MB DDR
336578-001	Memory expansion board, 333 MHz, 512-MB DDR
336579-001	Memory expansion board, 333 MHz, 1024-MB DDR
338669-001	Battery pack, 8-cell, 4.4 Wh, Li-ion
339096-001	Advanced Port Replicator
339097-001	Simple Port Replicator
339742-291	802.11b W500 modem board (for use in Japan) mini PCI communications board
340165-001	Intel Pentium M (Banias) processor, 1.7-GHz
341520-001	Keyboard (including pointing stick) - United States
341520-031	Keyboard (including pointing stick) - United Kingdom
341520-041	Keyboard (including pointing stick) - Germany
341520-051	Keyboard (including pointing stick) - France
341520-061	Keyboard (including pointing stick) - Italy
341520-071	Keyboard (including pointing stick) - Spain
341520-081	Keyboard (including pointing stick) - Denmark
341520-091	Keyboard (including pointing stick) - Norway

Table 3-6
Spare Parts: Sequential Part Number Listing *(Continued)*

Spare Part Number	Description
341520-121	Keyboard (including pointing stick) - French Canada
341520-131	Keyboard (including pointing stick) - Portugal
341520-141	Keyboard (including pointing stick) - Turkey
341520-161	Keyboard (including pointing stick) - Latin America
341520-171	Keyboard (including pointing stick) - Saudi Arabia
341520-201	Keyboard (including pointing stick) - Brazil
341520-211	Keyboard (including pointing stick) - Hungary
341520-221	Keyboard (including pointing stick) - Czech Republic
341520-251	Keyboard (including pointing stick) - Russia
341520-281	Keyboard (including pointing stick) - Thailand
341520-291	Keyboard (including pointing stick) - Japan
341520-A41	Keyboard (including pointing stick) - European
341520-AB1	Keyboard (including pointing stick) - Taiwan
341520-AD1	Keyboard (including pointing stick) - Korea
341520-B31	Keyboard (including pointing stick) - International
341520-B71	Keyboard (including pointing stick) - Sweden/Finland
341520-BA1	Keyboard (including pointing stick) - Slovenia
341520-BB1	Keyboard (including pointing stick) - Israel
341520-BG1	Keyboard (including pointing stick) - Switzerland
341520-DD1	Keyboard (including pointing stick) - Iceland
344256-001	4X Max Reg DVD+RW/R and CD-RW combo drive
345056-001	Miscellaneous Cable Kit
345057-001	Misc Screw Kit

Table 3-6
Spare Parts: Sequential Part Number Listing *(Continued)*

Spare Part Number	Description
345058-001	Display assembly, 15.0-inch, XGA, TFT
345059-001	Display assembly, 15.0-inch, SXGA+, TFT
345060-001	Display assembly, 15.0-inch, UXGA+, TFT
345061-001	Top cover (includes TouchPad and speaker)
345062-001	Base enclosure (includes optical drive shield, hard drive shield, and four notebook feet)
345063-001	LED switch cover
345064-001	System board (includes 64-MB discrete video memory)
345065-001	Fan assembly
345066-001	Misc Plastics Kit
345067-001	Heat sink
345630-001	40-GB (5400-rpm) hard drive
345631-001	60-GB (5400-rpm) hard drive
345632-001	80-GB (5400-rpm) hard drive
345640-001	802.11b wireless LAN (ROW) Wireless LAN card
345641-001	802.11b wireless LAN (MOW) Wireless LAN card
345855-001	60-GB (7200-rpm) hard drive (nw8000 only)
345856-001	Trusted Platform Module (TPM)
345857-001	Intel Pentium M (Dothan) processor, 1.8 GHz
348277-001	Bluetooth wireless communications board
349206-001	System board (includes 128-MB discrete video memory)
349240-001	24X Max CD-ROM Drive
349241-001	8X Max DVD-ROM drive

Table 3-6
Spare Parts: Sequential Part Number Listing *(Continued)*

Spare Part Number	Description
349242-001	24X Max DVD+RW/R and CD-RW combo drive
349243-001	24X Max DVD/CD-RW combo drive
353395-001	Intel Pentium M (Dothan) processor, 2.0 GHz
356596-001	Intel Pentium M (Dothan) processor, 1.6 GHz
356597-001	Intel Pentium M (Dothan) processor, 1.7 GHz
359636-001	Intel Pentium M (Dothan) processor, 1.5 GHz
360663-001	Battery pack, 8-cell, 4.8AHR
365438-001	60-GB (7200-rpm) hard drive (includes bezel and frame)
368247-001	802.11b/g modem board (MOW) mini PCI communications board
368248-001	802.11b/g modem board (ROW) mini PCI communications board
373646-151	Keyboard (including pointing stick) - Greece Bk
378539-151	Keyboard (including pointing stick) - Greece
379336-001	Integrated smart card

4

Removal and Replacement Preliminaries

This chapter provides essential information for proper and safe removal and replacement service.

4.1 Tools Required

You need the following tools to complete the removal and replacement procedures:

- Magnetic screw driver
- Phillips P0 screw driver
- Torx8 screw driver
- Torx7 pin bit screw driver

Some computer models have two Torx7 with pin security screws (M2.0×4.0) securing the Mini PCI communications board to the computer. A T7 pin bit screw driver is required to remove the Mini PCI communications board on these computer models. Refer to Section 5.12, "Mini PCI Communications Board," for more information on removing Mini PCI communications boards.

- 5.0-mm socket for system board standoffs
- Flat-bladed screwdriver

4.2 Service Considerations

The following sections include some of the considerations that you should keep in mind during disassembly and assembly procedures.

As you remove each subassembly from the notebook, place the subassembly (and all accompanying screws) away from the work area to prevent damage.

Plastic Parts

Using excessive force during disassembly and reassembly can damage plastic parts. Use care when handling the plastic parts. Apply pressure only at the points designated in the maintenance instructions.

Cables and Connectors

CAUTION: When servicing the notebook, ensure that cables are placed in their proper locations during the reassembly process. Improper cable placement can damage the notebook.

Cables must be handled with extreme care to avoid damage. Apply only the tension required to unseat or seat the cables during removal and insertion. Handle cables by the connector whenever possible. In all cases, avoid bending, twisting, or tearing cables. Ensure that cables are routed in such a way that they cannot be caught or snagged by parts being removed or replaced. Handle flex cables with extreme care; these cables tear easily.

4.3 Preventing Damage to Removable Drives

Removable drives are fragile components that must be handled with care. To prevent damage to the notebook, damage to a removable drive, or loss of information, observe the following precautions:

- Before removing or inserting a hard drive, shut down the notebook. If you are unsure whether the notebook is off or in hibernation, turn the notebook on, then shut it down.
- Before removing a diskette drive or optical drive, ensure that a diskette or disc is not in the drive. Ensure that the optical drive tray is closed.
- Before handling a drive, ensure that you are discharged of static electricity. While handling a drive, avoid touching the connector.
- Handle drives on surfaces that have at least one inch of shock-proof foam.
- Avoid dropping drives from any height onto any surface.
- After removing a hard drive, an optical drive, or a diskette drive, place it in a static-proof bag.
- Avoid exposing a hard drive to products that have magnetic fields, such as monitors or speakers.
- Avoid exposing a drive to temperature extremes or liquids.
- If a drive must be mailed, place the drive in a bubble pack mailer or other suitable form of protective packaging and label the package “FRAGILE: Handle With Care.”

4.4 Preventing Electrostatic Damage

Many electronic components are sensitive to electrostatic discharge (ESD). Circuitry design and structure determine the degree of sensitivity. Networks built into many integrated circuits provide some protection, but in many cases the discharge contains enough power to alter device parameters or melt silicon junctions.

A sudden discharge of static electricity from a finger or other conductor can destroy static-sensitive devices or microcircuitry. Often the spark is neither felt nor heard, but damage occurs.

An electronic device exposed to electrostatic discharge might not be affected at all and can work perfectly throughout a normal life cycle. Or the device might function normally for a while, then degrade in the internal layers, reducing its life expectancy.

4.5 Packaging and Transporting Precautions

Use the following grounding precautions when packaging and transporting equipment:

- To avoid hand contact, transport products in static-safe containers, such as tubes, bags, or boxes.
- Protect all electrostatic-sensitive parts and assemblies with conductive or approved containers or packaging.
- Keep electrostatic-sensitive parts in their containers until the parts arrive at static-free workstations.
- Place items on a grounded surface before removing them from their containers.
- Always be properly grounded when touching a sensitive component or assembly.
- Store reusable electrostatic-sensitive parts from assemblies in protective packaging or nonconductive foam.
- Use transporters and conveyors made of antistatic belts and roller bushings. Ensure that mechanized equipment used for moving materials is wired to ground and that proper materials are selected to avoid static charging. When grounding is not possible, use an ionizer to dissipate electric charges.

4.6 Workstation Precautions

Use the following grounding precautions at workstations:

- Cover the workstation with approved static-shielding material (refer to Table 4-2).
- Use a wrist strap connected to a properly grounded work surface and use properly grounded tools and equipment.
- Use conductive field service tools, such as cutters, screwdrivers, and vacuums.
- When using fixtures that must directly contact dissipative surfaces, use only fixtures made of static-safe materials.
- Keep the work area free of nonconductive materials, such as ordinary plastic assembly aids and Styrofoam.
- Handle electrostatic-sensitive components, parts, and assemblies by the case or PCM laminate. Handle these items only at static-free workstations.
- Avoid contact with pins, leads, or circuitry.
- Turn off power and input signals before inserting or removing connectors or test equipment.

4.7 Grounding Equipment and Methods

Grounding equipment must include either a wrist strap or a foot strap at a grounded workstation.

- When seated, wear a wrist strap connected to a grounded system. Wrist straps are flexible straps with a minimum of one megohm ±10% resistance in the ground cords. To provide proper ground, wear a strap snugly against the skin at all times. On grounded mats with banana-plug connectors, connect a wrist strap with alligator clips.
- When standing, use foot straps and a grounded floor mat. Foot straps (heel, toe, or boot straps) can be used at standing workstations and are compatible with most types of shoes or boots. On conductive floors or dissipative floor mats, use foot straps on both feet with a minimum of one-megohm resistance between the operator and ground. To be effective, the conductive strips must be worn in contact with the skin.

Other grounding equipment recommended for use in preventing electrostatic damage includes

- Antistatic tape.
- Antistatic smocks, aprons, and sleeve protectors.
- Conductive bins and other assembly or soldering aids.
- Nonconductive foam.
- Conductive tabletop workstations with ground cords of one-megohm resistance.
- Static-dissipative tables or floor mats with hard ties to the ground.
- Field service kits.
- Static awareness labels.
- Material-handling packages.
- Nonconductive plastic bags, tubes, or boxes.
- Metal tote boxes.
- Electrostatic voltage levels and protective materials.

Table 4-1 shows how humidity affects the electrostatic voltage levels generated by different activities.

Table 4-1
Typical Electrostatic Voltage Levels

	Relative Humidity		
Event	**10%**	**40%**	**55%**
Walking across carpet	35,000 V	15,000 V	7,500 V
Walking across vinyl floor	12,000 V	5,000 V	3,000 V
Motions of bench worker	6,000 V	800 V	400 V
Removing DIPS from plastic tube	2,000 V	700 V	400 V
Removing DIPS from vinyl tray	11,500 V	4,000 V	2,000 V
Removing DIPS from Styrofoam	14,500 V	5,000 V	3,500 V
Removing bubble pack from PCB	26,500 V	20,000 V	7,000 V
Packing PCBs in foam-lined box	21,000 V	11,000 V	5,000 V

✎ A product can be degraded by as little as 700 V.

Table 4-2 lists the shielding protection provided by antistatic bags and floor mats.

Table 4-2
Static-Shielding Materials

Material	Use	Voltage Protection Level
Antistatic plastic	Bags	1,500 V
Carbon-loaded plastic	Floor mats	7,500 V
Metallized laminate	Floor mats	5,000 V

5

Removal and Replacement Procedures

This chapter provides removal and replacement procedures.

There are 62 screws in eight different sizes that must be removed, replaced, and loosened when servicing the notebook. Make note of each screw size and location during removal and replacement.

Refer to Appendix C, “Screw Listing” for detailed information on screw sizes, locations, and usage.

5.1 Serial Number

Report the notebook serial number to HP when requesting information or ordering spare parts. The serial number is located on the bottom of the notebook.

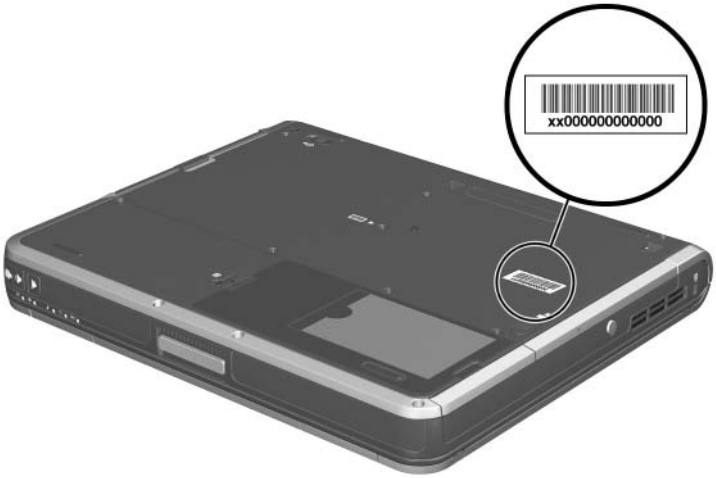

Serial Number Location

5.2 Disassembly Sequence Chart

Use the chart below to determine the section number to be referenced when removing notebook components.

Disassembly Sequence Chart

Section	Description	# of Screws Removed
5.3	Preparing the notebook for disassembly	
	Battery pack	0
	Hard drive	1 to remove 4 screws and 2 alignment pins to disassemble
5.4	Notebook feet	0
5.5	MultiBay device	0
5.6	Bluetooth board	3
5.7	Integrated smart card	0
5.8	Optical drive	1
5.9	Keyboard	1
5.10	Memory expansion board	0
5.11	Modem board	2
5.12	Mini PCI communications board	2
5.13	Heat sink	5
5.14	Processor	0
5.15	LED switch cover	1
5.16	RTC battery	0
5.17	Security Module (TPM)	1
5.18	Display assembly	4
5.19	Top cover	18

Disassembly Sequence Chart *(Continued)*		
Section	**Description**	**# of Screws Removed**
5.20	Speaker	6
5.21	TouchPad	3
5.22	Fan assembly	4
5.23	System board	4

5.3 Preparing the Notebook for Disassembly

Before you begin any removal or installation procedures:

1. Save your work, exit all applications, and shut down the notebook. If you are not sure whether the notebook is off or in hibernation, briefly press the power button. If your work returns to the screen, save your work, exit all applications, and then shut down the notebook.
2. Disconnect all external devices connected to the notebook.
3. Disconnect the power cord.

Spare Part Number Information	
Battery pack, 8-cell, 4.4 Wh, Li-Ion	338669-001
Battery pack, 8-cell, 4.8AHR	360663-001

4. Remove the battery pack by following these steps:
   a. Turn the notebook upside down with the front facing you.
   b. Slide and hold the battery release latch ❶ toward the back of the notebook.
   c. Use the notch in the battery pack to slide the battery pack to the right ❷.
   d. Remove the battery pack.

Removing the Battery Pack

5. Remove the battery bezel by sliding it down and off of the battery pack.

The battery bezel is included in the Miscellaneous Plastics Kit, spare part number 345066-001.

Removing the Battery Bezel

Reverse the above procedure to install the battery pack and battery bezel.

6. Remove the hard drive by following these steps:

Spare Part Number Information		
Hard drives (includes hard drive bezel and frame)		
80-GB 5400-rpm	(all models)	345632-001
60-GB 5400-rpm	(all models)	345631-001
40-GB 5400-rpm	(all models)	345630-001
60-GB 7200-rpm	(nw8000 only)	345855-001

a. Turn the notebook upside down with the front facing you.

b. Remove the T8M2.0×6.0 hard drive cover screw ❶.

c. Slide and hold the tab on the hard drive cover to the left ❷.

d. Swing the right edge of the hard drive cover up and to the left ❸.

The hard drive cover is included in the Miscellaneous Plastics Kit, spare part number 345066-001.

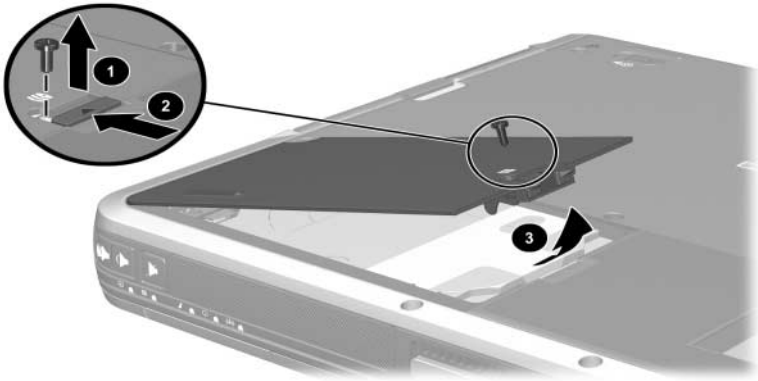

Removing the Hard Drive Cover

e. Use the Mylar tab ❶ to slide the hard drive to the right ❷ to disconnect it from the system board.

f. Lift the hard drive straight up to remove it ❸.

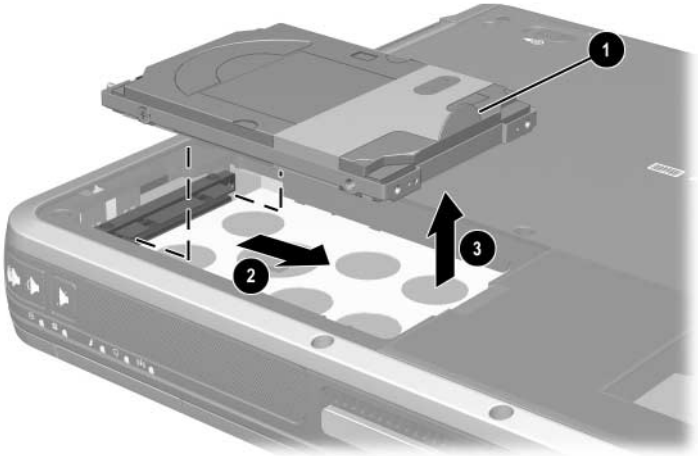

Removing the Hard Drive

g. Remove the two T5M2.5×4.0 screws ❶ and the two PM3.0×3.5 screws ❷ that secure the hard drive to the hard drive frame.

h. Use a 4.0-mm socket to remove the two M2.0×10.0 alignment pins ❸ that secure the hard drive to the hard drive frame.

i. Remove the hard drive ❹ from the hard drive frame.

j. Remove the hard drive connector ❺ from the hard drive.

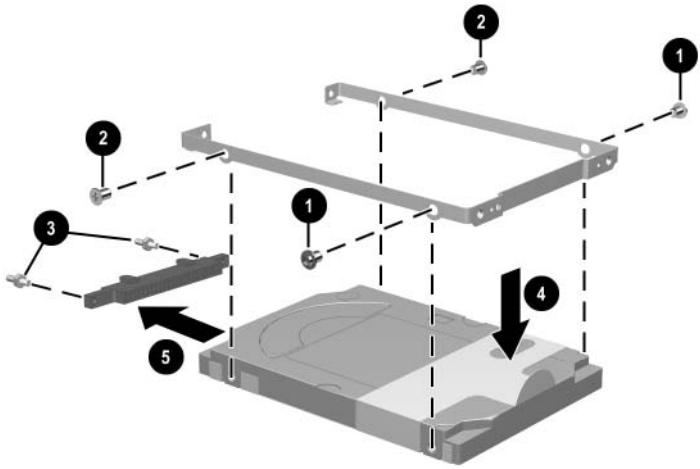

Disassembling the Hard Drive

Reverse the above procedure to assemble and install the hard drive.

5.4 Notebook Feet

The notebook feet are adhesive-backed rubber pads. The feet are included in the Miscellaneous Plastics Kit, spare part number 345066-001. The feet attach to the base enclosure as illustrated below.

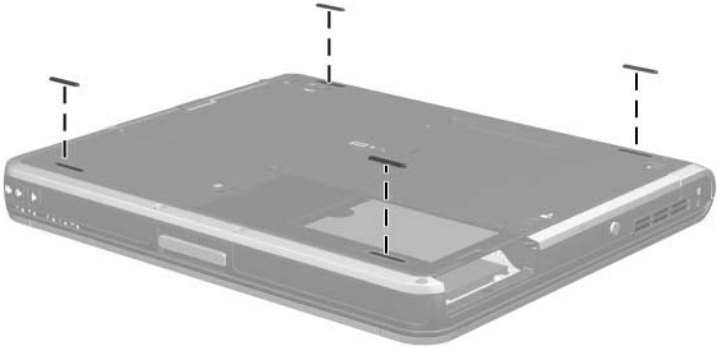

Notebook Feet Locations

5.5 MultiBay Device

Spare Part Number Information	
1.44-MB diskette drive	135233-001
24X Max CD-ROM Drive	228746-001
8X Max DVD+RW/R and CD-RW Combo Drive	251292-001
24X Max DVD+RW/R and CD-RW Combo Drive	344256-001

1. Prepare the notebook for disassembly (refer to Section 5.3).
2. Turn the notebook upside down with the left side facing you.
3. Slide and hold the MultiBay release latch toward you ❶.
4. Use the notch in the MultiBay device to slide the device out of the MultiBay ❷.
5. Remove the MultiBay device.

Removing a MultiBay Device

Reverse the above procedure to install a MultiBay device.

5.6 Bluetooth Board

Spare Part Number Information	
Bluetooth board (includes cable)	348277-001

1. Prepare the notebook for disassembly (refer to Section 5.3).
2. Turn the notebook upside down with the left side facing you.
3. Remove the T8M2.0×6.0 screw ❶ that secures the Bluetooth cover to the notebook.
4. Lift the cover straight up to remove it ❷.

The Bluetooth cover is included in the Miscellaneous Plastics Kit, spare part number 345066-001.

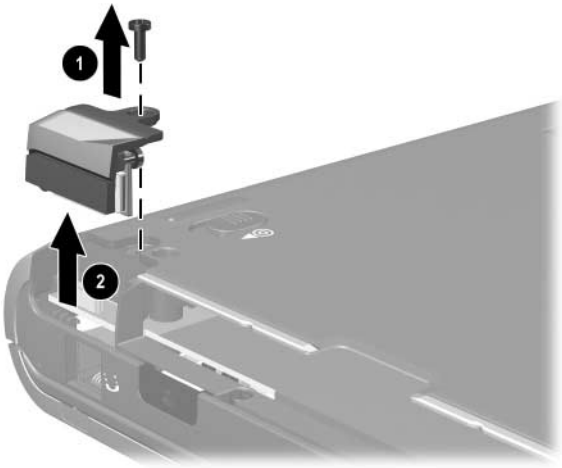

Removing the Bluetooth Cover

5. Disconnect the Bluetooth cable from the Bluetooth board ❶ and the system board ❷.

The Bluetooth cable is included with the Bluetooth board and is also included in the Miscellaneous Cables Kit, spare part number 345056-001.

6. Remove the two PM1.5×3.0 screws ❸ that secure the Bluetooth board to the Bluetooth cover.
7. Remove the board from the cover ❹.

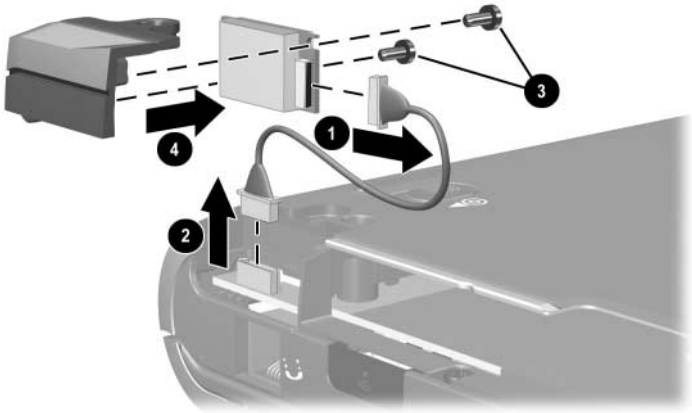

Removing the Bluetooth Board

Reverse the above procedure to install the Bluetooth board.

5.7 Integrated Smart Card

Spare Part Number Information	
Integrated smart card	379336-001

The integrated smart card is located in the bottom PC Card slot.

1. Prepare the notebook for disassembly (refer to Section 5.3).
2. Remove any PC Card or spacer from the top PC Card slot.
3. Using a flat-bladed tool, pry the smart card bezel off of the notebook ❶. The bezel releases from the notebook with a small amount of force.
4. Remove the bezel from the notebook ❷.

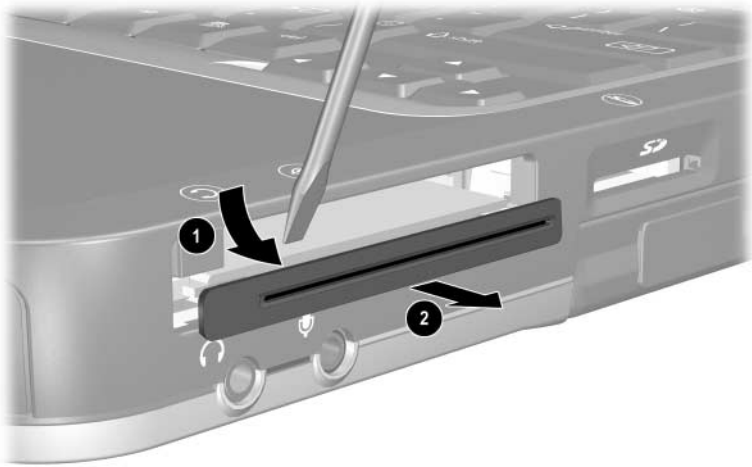

Removing the Smart Card Bezel

The integrated smart card bezel is included in the Miscellaneous Plastics Kit, spare part number 345066-001.

5. Eject the smart card from the notebook using a flat-bladed tool to press the small metal eject tab ❶ to the left of the smart card.
6. Remove the card from the slot ❷.

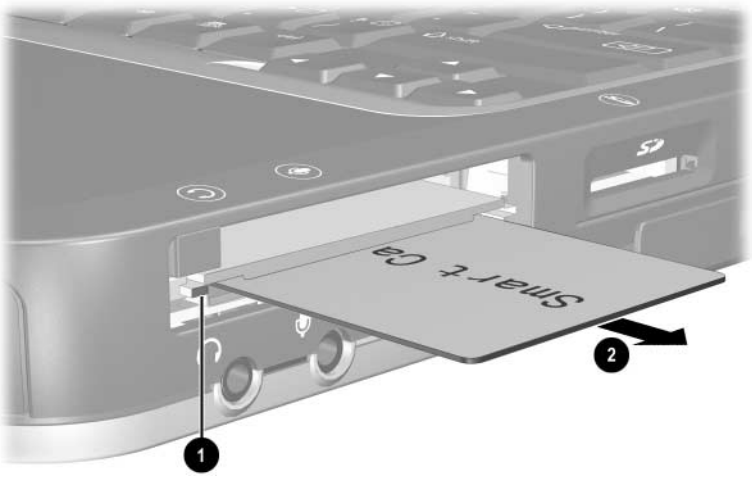

Removing the Smart Card

Reverse the above procedure to install the integrated smart card.

5.8 Optical Drive

Spare Part Number Information	
24X Max DVD+RW/R and CD-RW Combo Drive	349242-001
8X Max DVD-ROM Drive	349241-001
24X Max DVD/CD-RW Combo Drive	349243-001
24X Max CD-ROM Drive	349240-001

1. Prepare the notebook for disassembly (refer to Section 5.3).
2. Turn the notebook upside down with the right side facing you.
3. Remove the T8M2.0×6.0 screw ❶ that secures the optical drive to the notebook.
4. Insert a paper clip or similar tool into the optical drive release hole to open the optical drive tray ❷.
5. Use the optical drive tray to remove the optical drive ❸.

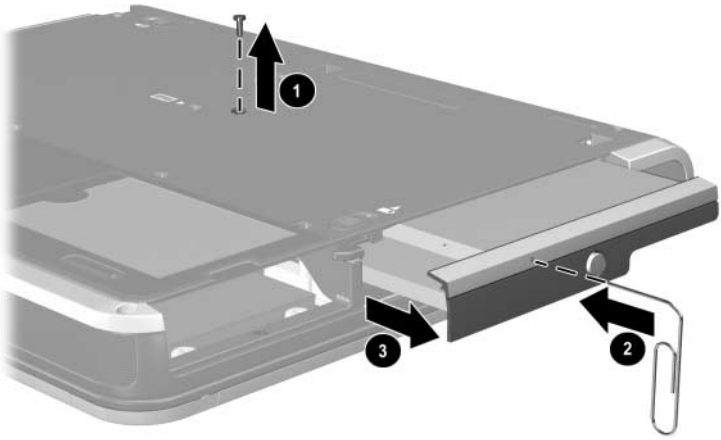

Removing the Optical Drive

Reverse the above procedure to install the optical drive.

5.9 Keyboard

Spare Part Number Information			
Keyboards (include pointing stick)			
Brazil	341520-201	Korea	341520-AD1
Czech Republic	341520-221	Latin America	341520-161
Denmark	341520-081	Norway	341520-091
Europe	341520-A41	Portugal	341520-131
France	341520-051	Russia	341520-251
French Canada	341520-121	Saudi Arabia	341520-171
Germany	341520-041	Slovenia	341520-BA1
Greece	378539-151	Spain	341520-071
Greece - Blk	373646-151	Sweden/Finland	341520-B71
Hungary	341520-211	Switzerland	341520-BG1
Iceland	341520-DD1	Taiwan	341520-AB1
International	341520-B31	Thailand	341520-281
Israel	341520-BB1	Turkey	341520-141
Italy	341520-061	United Kingdom	341520-031
Japan	341520-291	United States	341520-001

1. Prepare the notebook for disassembly (refer to Section 5.3).
2. Turn the notebook upside down with the front facing you.

3. Remove the T8M2.×6.0 screw that secures the keyboard to the notebook.

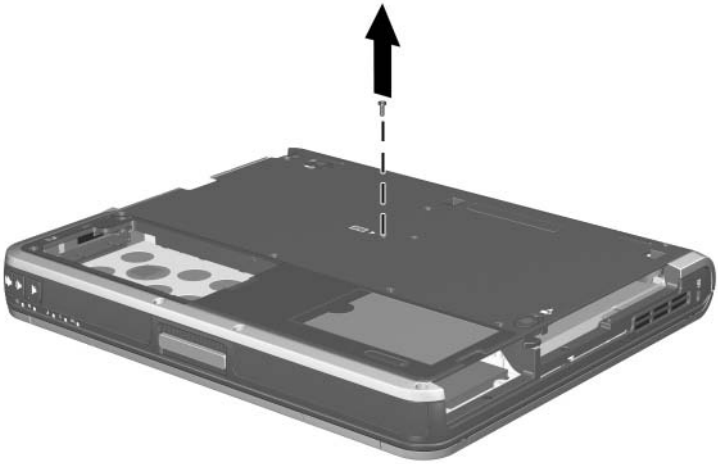

Removing the Keyboard Screw

4. Turn the notebook right-side up with the front facing you.
5. Open the notebook.
6. Slide the four tabs ❶ on the top edge of the keyboard toward you.
7. Lift the rear edge of the keyboard up and swing it toward you ❷ until it rests on the palm rest.

Releasing the Keyboard

8. Release the zero insertion force (ZIF) connector ❶ to which the pointing stick cable is attached and disconnect the cable ❷.
9. Release the ZIF connector ❸ to which the keyboard cable is attached and disconnect the cable ❹.

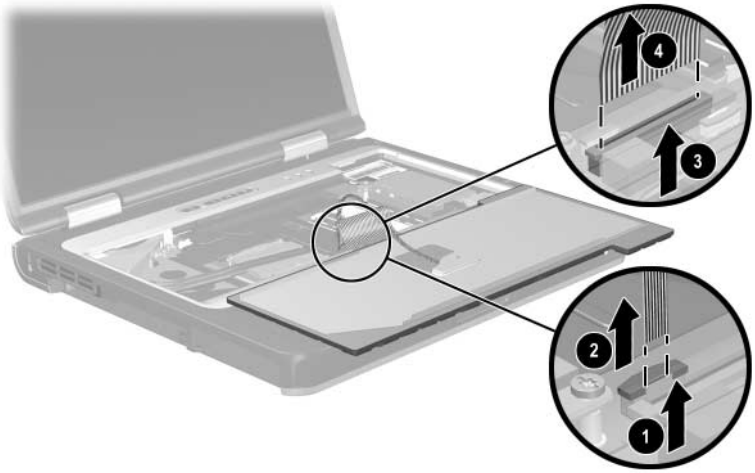

Disconnecting the Keyboard Cables

10. Remove the keyboard.

Reverse the above procedure to install the keyboard.

5.10 Memory Expansion Board

Spare Part Number Information	
1024 MB (1.0 GB), 333 MHz	336579-001
512 MB, 333 MHz	336578-001
256 MB, 333 MHz	336577-001

1. Prepare the notebook for disassembly (refer to Section 5.3).
2. Release the keyboard (refer to Section 5.9).
3. Spread the retaining tabs ❶ that secure the memory expansion board to the socket. The free end of the board rises.
4. Pull the board away from the socket at a 45-degree angle ❷.

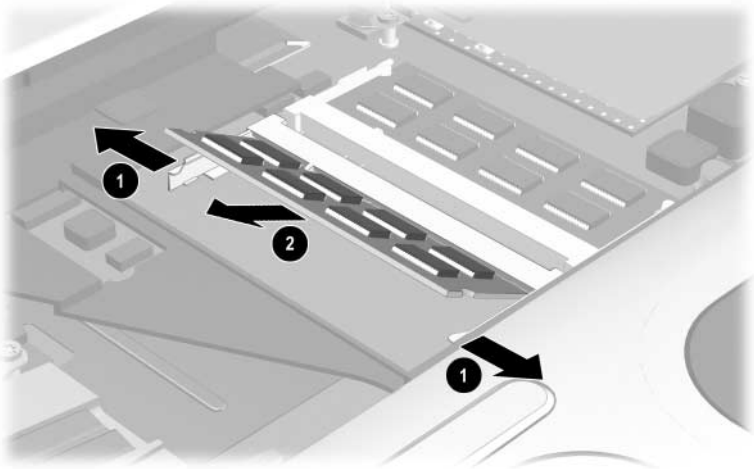

Removing a Memory Expansion Board

Reverse the above procedure to install a memory expansion board.

5.11 Modem Board

Spare Part Number Information	
Modem board	325521-001

1. Prepare the notebook for disassembly (refer to Section 5.3).
2. Release the keyboard (refer to Section 5.9).
3. Remove the two T8M2.0×4.0 screws ❶ that secure the modem board to the notebook.
4. Lift up on the right side of the modem board ❷ to disconnect the board from the system board.

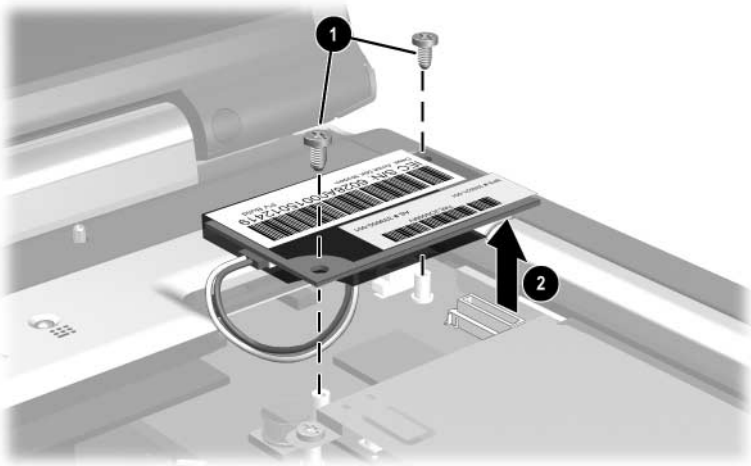

Removing the Modem Board Screws

5. Turn the modem board upside down ❶.
6. Disconnect the modem cable ❷ from the modem.

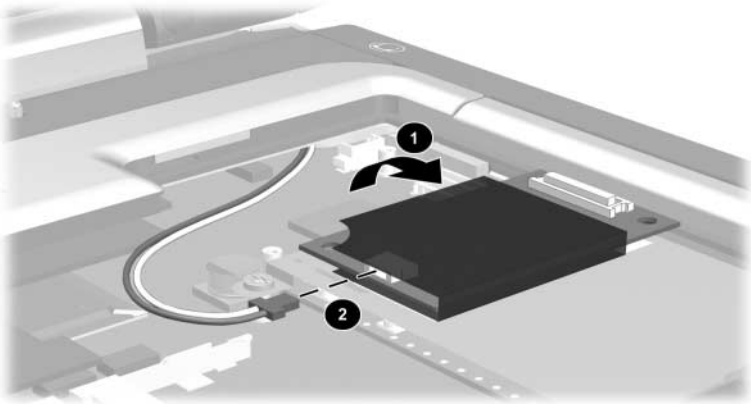

Disconnecting the Modem Board Cable

7. Remove the modem board.

Reverse the above procedure to install the modem board.

5.12 Mini PCI Communications Board

Spare Part Number Information	
802.11a/b/g LAN NIC	325525-001
802.11b/g LAN NIC	325526-001
802.11b W500 modem board (for use in Japan)	339742-291
802.11b wireless LAN (MOW)	345641-001
802.11b wireless LAN (ROW)	345640-001
802.11b/g wireless modem (MOW)	368247-001
802.11b/g wireless modem (ROW)	368248-001

1. Prepare the notebook for disassembly (refer to Section 5.3).
2. Release the keyboard (refer to Section 5.9).

Some computer models have two Torx7 with pin security screws (M2.0×4.0) securing the Mini PCI communications board to the computer. A T7 pin bit screw driver is required to remove the Mini PCI communications board on these computer models.

3. Remove the two T8M2.0×4.0 screws ❶ that secure the Mini PCI communications board shield to the notebook.
4. Lift up on the left side of the shield ❷ and slide it to the left ❸ to remove it.

The Mini PCI communications board shield is included in the Miscellaneous Plastics Kit, spare part number 345066-001.

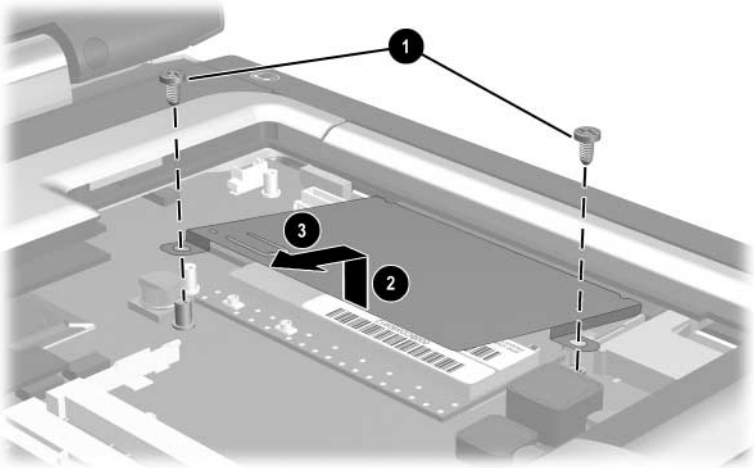

Removing the Mini PCI Communications Board Shield

5. Disconnect the two antenna cables ❶ from the board. Make note of which cable connects to which terminal.
6. Spread the retaining tabs ❷ that secure the Mini PCI communications board to the socket. The free end of the board rises.
7. Pull the board away from the socket at a 45-degree angle ❸.

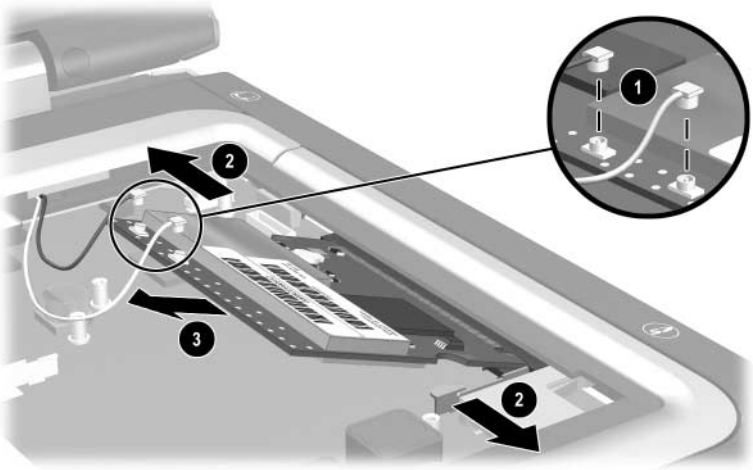

Removing the Mini PCI Communications Board

8. Remove the Mini PCI communications board.

Reverse the above procedure to install the Mini PCI communications board.

5.13 Heat Sink

Spare Part Number Information	
Heat sink (includes grease)	345067-001

1. Prepare the notebook for disassembly (refer to Section 5.3).
2. Release the keyboard (refer to Section 5.9).
3. Remove the five T8M2.0×4.0 screws ❶ that secure the heat sink to the notebook.
4. Lift the front edge of the heat sink ❷ to unseat the adhesive grip of the thermal grease on the processor.
5. Swing the heat sink in a counterclockwise motion ❸ until the back of the heat sink ❹ clears the notebook.

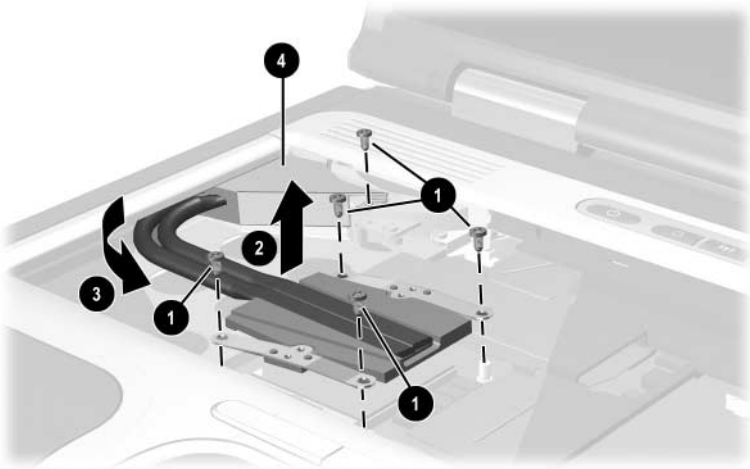

Removing the Heat Sink

6. Remove the heat sink.

Carefully clean any thermal grease residue from the heat sink ❶ and processor surfaces ❷ each time you remove the heat sink. Apply new thermal grease to both surfaces.

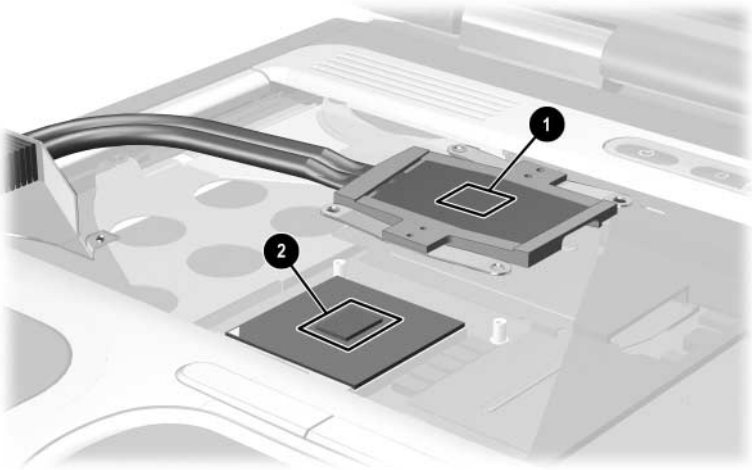

Removing the Thermal Grease From the Heat Sink and Processor

Reverse the above procedure to install the heat sink.

5.14 Processor

Spare Part Number Information	
Processors (include grease)	
Intel Pentium M (Banias) processor, 1.7 GHz	340165-001
Intel Pentium M (Banias) processor, 1.6 GHz	319777-001
Intel Pentium M (Banias) processor, 1.5 GHz	319776-001
Intel Pentium M (Banias) processor, 1.4 GHz	319775-001
Intel Pentium M (Dothan) processor, 1.5 GHz	359636-001
Intel Pentium M (Dothan) processor, 1.6 GHz	356596-001
Intel Pentium M (Dothan) processor, 1.7 GHz	356597-001
Intel Pentium M (Dothan) processor, 1.8 GHz	345857-001
Intel Pentium M (Dothan) processor, 2.0 GHz	353395-001

1. Prepare the notebook for disassembly (refer to Section 5.3).
2. Release the keyboard (refer to Section 5.9).
3. Remove the heat sink (refer to Section 5.13).

4. Use a flat-bladed screwdriver to turn the processor locking screw one-quarter turn counterclockwise ❶.
5. Remove the processor from the system board socket ❷.

Note that the gold triangle ❸ on the processor should be aligned in the front left corner when you install the processor.

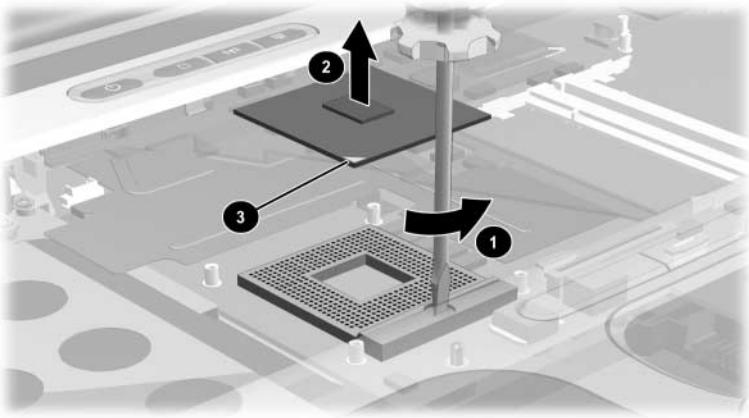

Removing the Processor

Reverse the above procedure to install the processor.

5.15 LED Switch Cover

Spare Part Number Information	
LED switch cover	345063-001

1. Prepare the notebook for disassembly (refer to Section 5.3).
2. Turn the notebook upside down with the rear facing you.
3. Remove the T8M2.0×6.0 screw that secures the LED switch cover to the notebook.

Removing the LED Switch Cover Screw

4. Turn the notebook right-side up with the front facing you.
5. Open the notebook.
6. Lift the left ❶ and right ❷ sides of the LED switch cover to disengage the cover from the notebook.
7. Remove the LED switch cover.

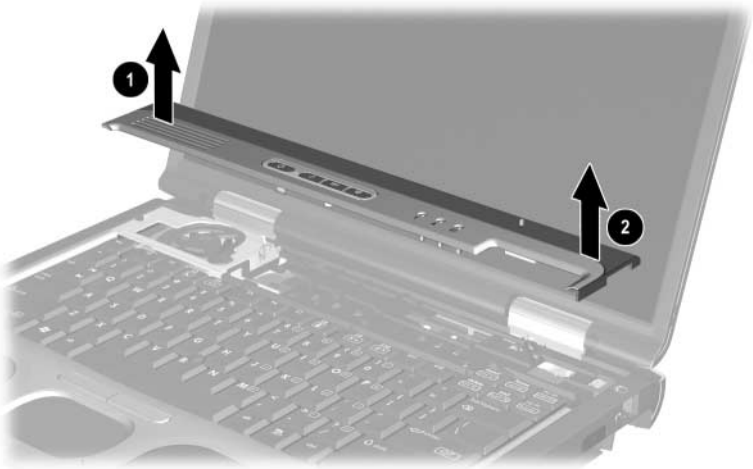

Removing the LED Switch Cover

Reverse the above procedure to install the LED switch cover.

5.16 RTC Battery

The RTC battery is included in the Miscellaneous Plastics Kit, spare part number 345066-001.

1. Prepare the notebook for disassembly (refer to Section 5.3).
2. Remove the LED switch cover (refer to Section 5.15).
3. Disconnect the RTC battery cable ❶ from the system board.
4. Slide the RTC battery out of the clips in the top cover ❷ and remove the battery.

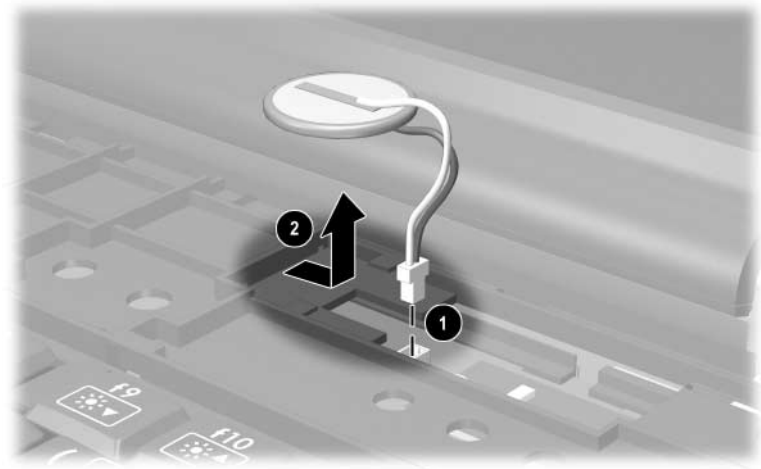

Removing the RTC Battery

Reverse the above procedure to install the RTC battery.

5.17 Security Module (TPM)

Spare Part Number Information	
Security Module (TPM)	345856-001

1. Prepare the notebook for disassembly (refer to Section 5.3).
2. Remove the LED switch cover (refer to Section 5.15).
3. Remove the PM3.5×3.0 screw ❶ that secures the security card to the system board.
4. Lift the security module straight up ❷ to disconnect it from the system board.

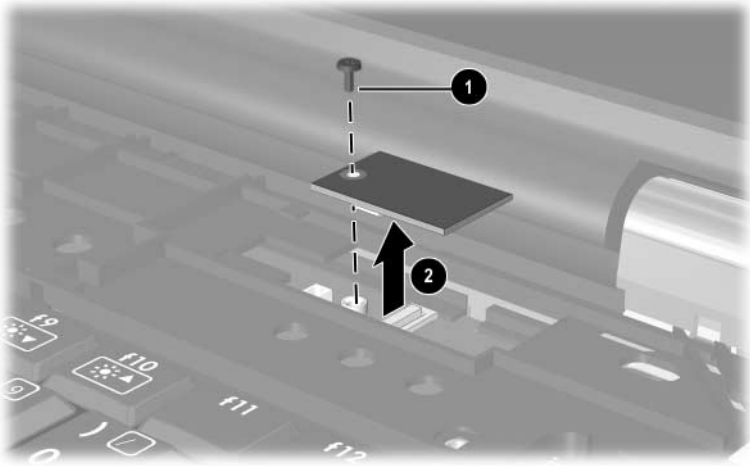

Removing the TPM Security Module

Reverse the above procedure to install the security card.

5.18 Display Assembly

Spare Part Number Information	
15.0-inch, UXGA, TFT	345060-001
15.0-inch, SXGA+, TFT	345059-001
15.0-inch, XGA, TFT	345058-001

1. Prepare the notebook for disassembly (refer to Section 5.3).
2. Remove the keyboard (refer to Section 5.9).
3. Disconnect the wireless antenna cables from the Mini PCI wireless communications board (refer to Section 5.12).
4. Remove the LED switch cover (refer to Section 5.15).
5. Disconnect the display cable ❶ from the system board.
6. Remove the wireless antenna cables from the opening ❷ and the clips ❸ in the top cover.

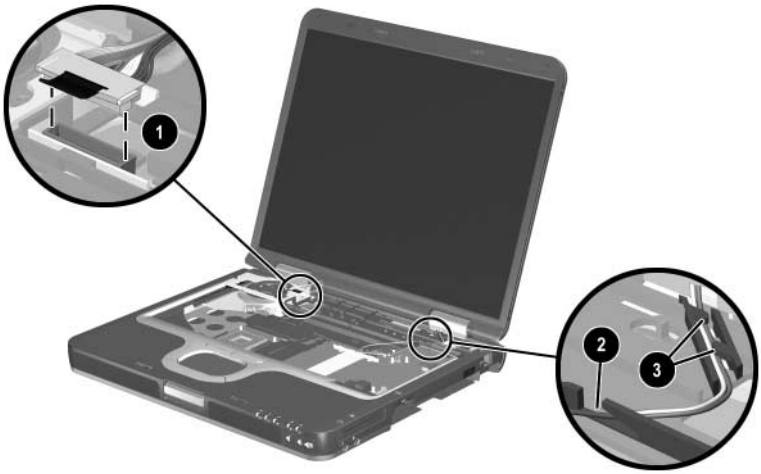

Disconnecting the Display Cables

7. Position the notebook with the rear facing toward you.
8. Remove the two T8M2.0×6.0 screws ❶ that secure the display hinge covers to the notebook.
9. Remove the two T8M2.0×6.0 screws ❷ that secure the display assembly to the notebook.

Removing the Display Screws

10. Lift the display assembly straight up ❶ to remove it from the notebook.
11. If necessary, remove the display hinge covers ❷ from the display assembly.

The display hinge covers are included in the Miscellaneous Plastics Kit, spare part number 345066-001.

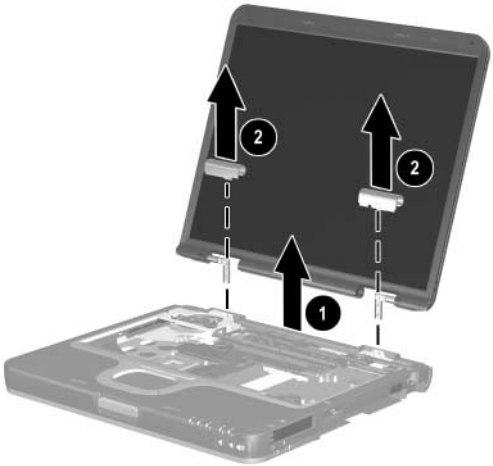

Removing the Display Assembly

Reverse the above procedure to install the display assembly.

5.19 Top Cover

Spare Part Number Information	
Top cover (includes TouchPad and speaker)	345061-001

1. Prepare the notebook for disassembly (refer to Section 5.3).
2. Remove the keyboard (refer to Section 5.9).
3. Remove the LED switch cover (refer to Section 5.15).
4. Remove the display assembly (refer to Section 5.18).
5. Turn the notebook upside down with the front facing you.
6. Remove the 17 T8M2.0×6.0 screws that secure the top cover to the notebook.

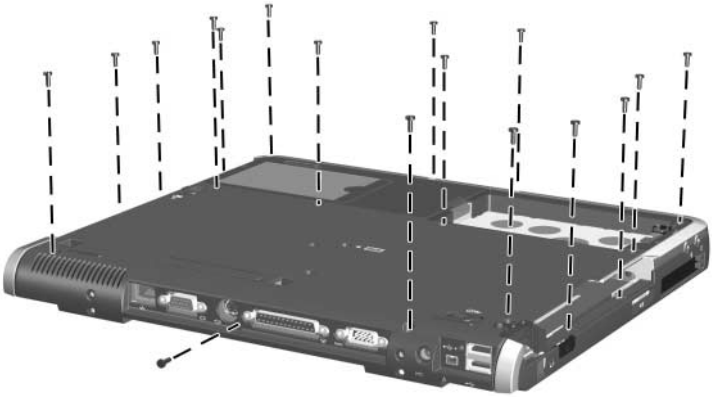

Removing the Top Cover Screws

7. Turn the notebook right-side up with the front facing you.
8. Remove the TM2.0×4.0 screw ❶ near the fan that secures the top cover to the notebook.
9. Lift the front edge of the top cover ❷ until the speaker cable ❸, TouchPad cable ❹, and microphone cable ❺ are accessible.

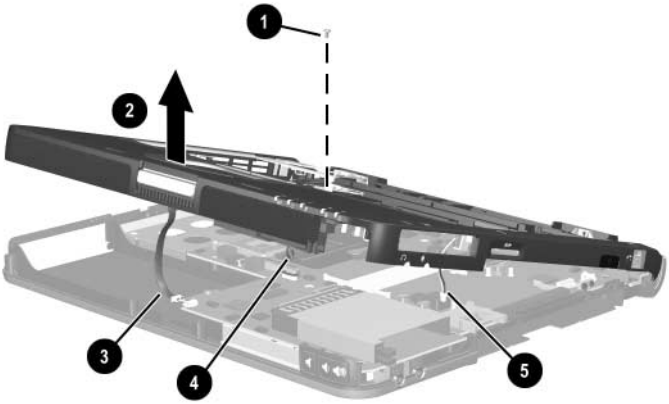

Releasing the Top Cover

10. Disconnect the speaker ❶ and microphone cables ❷.
11. Release the ZIF connector ❸ to which the TouchPad cable is attached and disconnect the TouchPad cable ❹ from the system board.

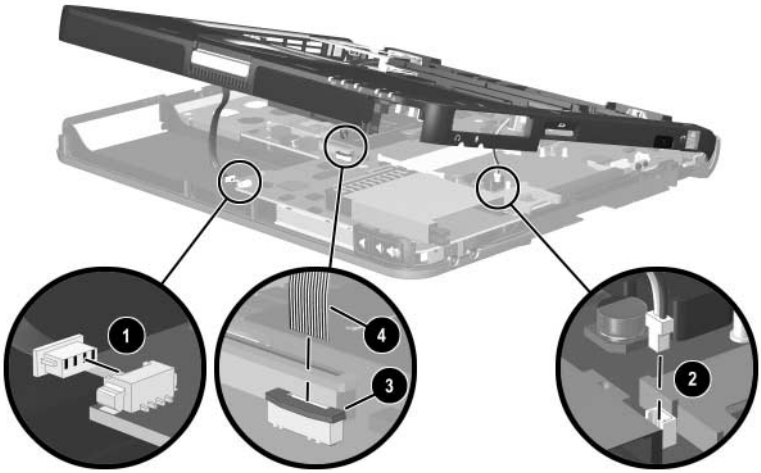

Disconnecting the Top Cover Cables

12. Remove the top cover.

Reverse the above procedure to install the top cover.

5.20 Speaker

The speaker is included with the top cover, spare part number 345061-001.

1. Prepare the notebook for disassembly (refer to Section 5.3) and remove the following components:
   - ❏ Keyboard (refer to Section 5.9)
   - ❏ LED switch cover (refer to Section 5.15)
   - ❏ Display assembly (refer to Section 5.18)
   - ❏ Top cover (refer to Section 5.19)
2. Turn the top cover upside down with the rear facing you.
3. Remove the five T8M2.0×4.0 screws ❶ and one T8M2.0×6.0 screw ❷ that secure the speaker to the top cover.
4. Remove the speaker ❸ from the top cover.

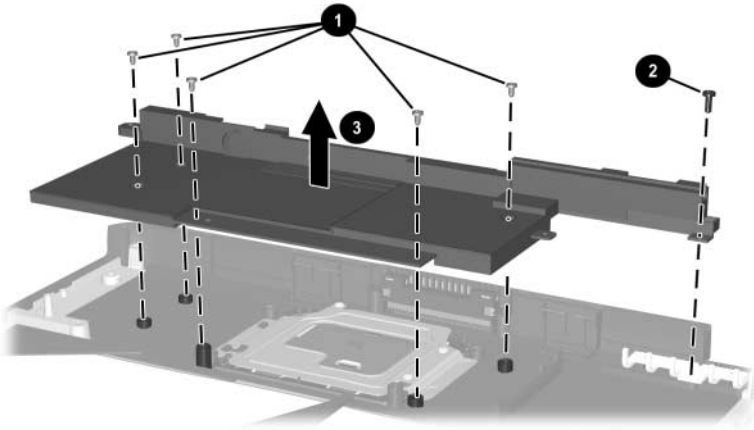

Removing the Speaker

Reverse the above procedure to install the speaker.

5.21 TouchPad

The TouchPad and bracket are included with the top cover, spare part number 345061-001.

1. Prepare the notebook for disassembly (refer to Section 5.3) and remove the following components:
   - ❏ Keyboard (refer to Section 5.9)
   - ❏ LED switch cover (refer to Section 5.15)
   - ❏ Display assembly (refer to Section 5.18)
   - ❏ Top cover (refer to Section 5.19)
   - ❏ Speaker (refer to Section 5.20)
2. Remove the three Torx T8M2.0×3.5 screws ❶ that secure the TouchPad and bracket to the top cover.
3. Lift the left side of the bracket ❷, then slide the bracket to the left.

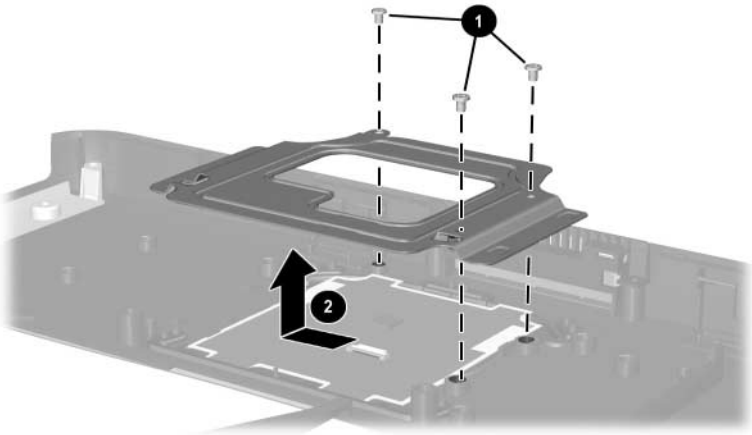

Removing the TouchPad Bracket

4. Remove the bracket.
5. Remove the TouchPad ❶ from the top cover.
6. Release the ZIF connector ❷ to which the TouchPad cable is attached and disconnect the cable ❸.

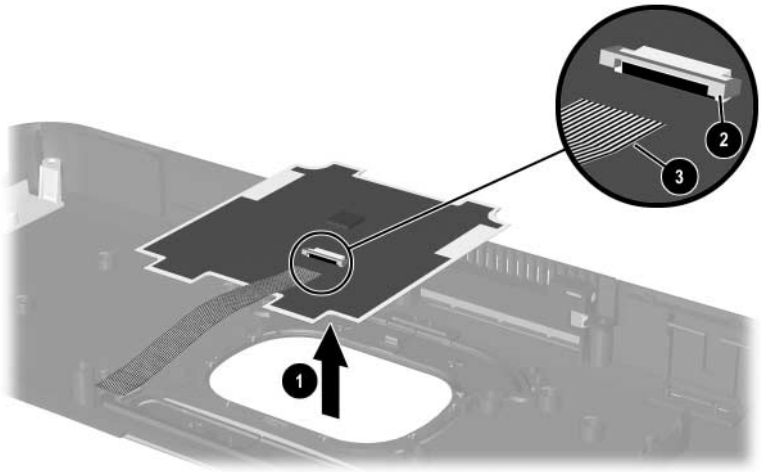

Removing the TouchPad

Reverse the above procedure to install the TouchPad and bracket.

5.22 Fan Assembly

Spare Part Number Information	
Fan assembly	345065-001

1. Prepare the notebook for disassembly (refer to Section 5.3) and remove the following components:
   - ❏ Keyboard (refer to Section 5.9)
   - ❏ Heat sink (refer to Section 5.13)
   - ❏ LED switch cover (refer to Section 5.15)
   - ❏ Display assembly (refer to Section 5.18)
   - ❏ Top cover (refer to Section 5.19)

2. Disconnect the fan cable ❶.
3. Remove the T8M2.0×4.0 screw ❷ that secures the fan assembly to the notebook.
4. Remove the fan assembly ❸ from the notebook.
5. Remove the three PM1.5×4.0 screws ❹ that secure the fan to the fan housing.
6. Remove the fan ❺.

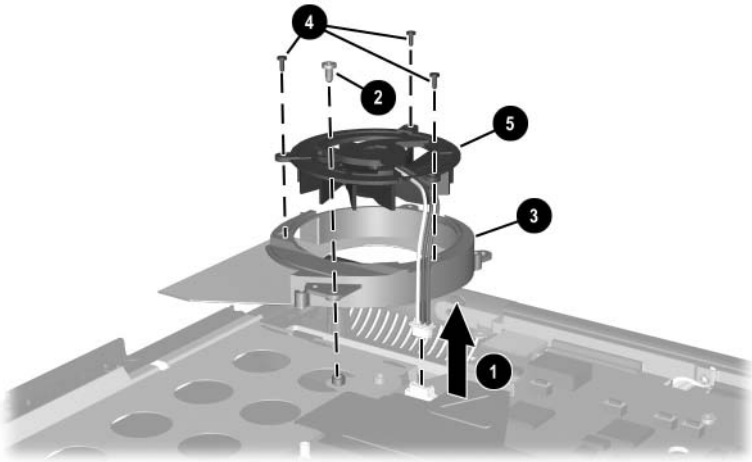

Removing the Fan

Reverse the above procedure to install the fan.

5.23 System Board

Spare Part Number Information	
System board with 128 MB of video memory	349206-001
System board with 64 MB of video memory	345064-001

Both system boards include thermal grease.

When replacing the system board, ensure that the following components are removed from the defective system board and installed on the replacement system board:

- Memory expansion boards (refer to Section 5.10)
- Modem board (refer to Section 5.11)
- Mini PCI communications board (refer to Section 5.12)
- Heat sink (refer to Section 5.13)
- Processor (refer to Section 5.14)
- Real time clock battery (refer to Section 5.16)
- Security card (refer to Section 5.17)

1. Prepare the notebook for disassembly (refer to Section 5.3) and remove the following components:
   - ❏ Keyboard (refer to Section 5.9)
   - ❏ LED switch cover (refer to Section 5.15)
   - ❏ Display assembly (refer to Section 5.18)
   - ❏ Top cover (refer to Section 5.19)
   - ❏ Fan (refer to Section 5.22)

2. Remove the four T8M2.0×4.0 screws that secure the system board to the notebook.

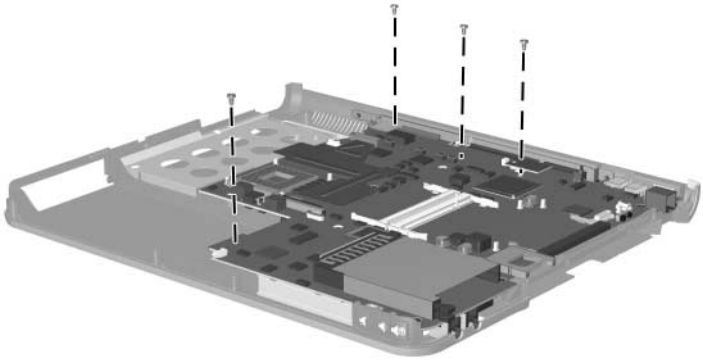

Removing the System Board Screws

3. Flex and hold the front right corner of the base enclosure out ❶ to allow the system board to clear the base enclosure.
4. Lift the front edge of the system board ❷ until the board clears the base enclosure.
5. Slide the system board toward you ❸ to remove it from the notebook.

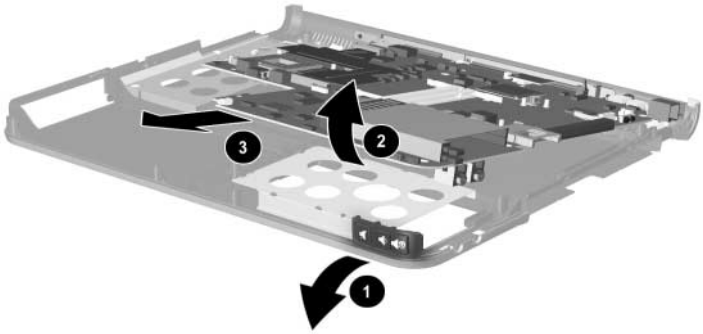

Removing the System Board

6. If necessary, disconnect the modem cable from the system board and remove the cable.

The modem cable is included in the Miscellaneous Cables Kit, spare part number 345056-001.

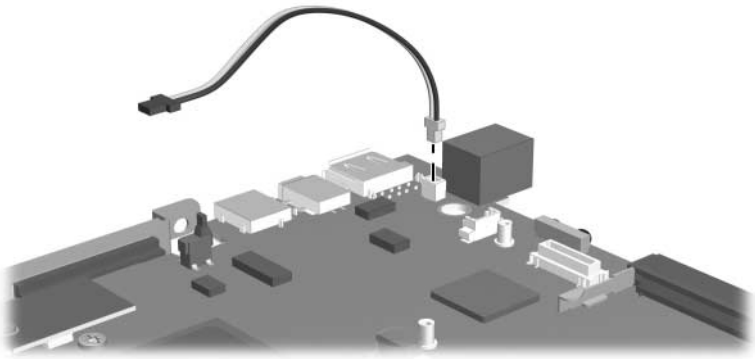

Removing the Modem Cable

Reverse the above procedure to install the modem cable and system board.

6

Specifications

This chapter provides physical and performance specifications.

Table 6-1
Notebook

Dimensions		
Height	4.1 cm	1.61 in
Width	32.6 cm	12.83 in
Depth	27.5 cm	10.83 in
Weight (with main battery pack and MultiBay weight saver)		
	2.95 kg	6.50 lb
Stand-alone power requirements		
Nominal operating voltage (Li-Ion)	14.4 VDC	
Maximum operating power	60.0 W	
Peak operating power	65.0 W	
Temperature		
Operating (not writing optical drive)	10°C to 35°C	50°F to 95°F
Nonoperating	-20°C to 60°C	-4°F to 140°F
Relative humidity (noncondensing)		
Operating	10% to 90%	
Nonoperating	5% to 90%, 38.7°C (101.6°F) maximum wet bulb temperature	

Table 6-1
Notebook *(Continued)*

Altitude (unpressurized)		
Operating (14.7 to 10.1 psia)	0 to 3,048 m	0 to 10,000 ft
Nonoperating (14.7 to 4.4 psia)	0 to 9,144 m	0 to 30,000 ft
Shock		
Operating	40 g, 2 ms, half-sine	
Nonoperating	240 g, 2 ms, half-sine	

✎ Applicable product safety standards specify thermal limits for plastic surfaces. The notebook operates well within this range of temperatures.

Table 6-2
15.0-inch, UXGA, TFT Display

Dimensions		
Height	29.9 cm	11.8 in
Width	22.8 cm	9.0 in
Diagonal	38.1 cm	15.0 in
Number of colors	Up to 16.8 million	
Contrast ratio	250:1	
Brightness	140 nits typical	
Pixel resolution		
Pitch	0.191 × 0.191 mm	
Format	1680 × 1200	
Configuration	RGB vertical stripe	
Backlight	Edge lit	
Character display	80 × 25	
Total power consumption	6.5 W	
Viewing angle	+/- 85° horizontal, +15/-35° vertical typical	

Table 6-3
15.1-inch, SXGA+, TFT Display

Dimensions		
Height	29.9 cm	11.8 in
Width	22.8 cm	9.0 in
Diagonal	38.1 cm	15.0 in
Number of colors	Up to 16.8 million	
Contrast ratio	150:1	
Brightness	150 nits typical	
Pixel resolution		
Pitch	0.218 × 0.218 mm	
Format	1400 × 1050	
Configuration	RGB vertical stripe	
Backlight	Edge lit	
Character display	80 × 25	
Total power consumption	5.75 W	
Viewing angle	+/- 35° horizontal, +15/-35° vertical typical	

Table 6-4
15.0-inch, XGA, TFT Display

Dimensions		
Height	29.9 cm	11.8 in
Width	22.8 cm	9.0 in
Diagonal	38.1 cm	15.0 in
Number of colors	Up to 16.8 million	
Contrast ratio	150:1	
Brightness	150 nits typical	
Pixel resolution		
Pitch	0.264 × 0.264 mm	
Format	1280 × 800	
Configuration	RGB vertical stripe	
Backlight	Edge lit	
Character display	80 × 25	
Total power consumption	5.75 W	
Viewing angle	+/- 35° horizontal, +15/-35° vertical typical	

Table 6-5
Hard Drives

	80-GB	60-GB	40-GB
User capacity per drive[1]	80 GB	60 GB	40 GB
Dimensions			
Height	9.5 mm	9.5 mm	9.5 mm
Width	70 mm	70 mm	70 mm
Weight	99 g	99 g	99 g
Interface type	ATA-5	ATA-5	ATA-5
Transfer rate			
Synchronous (maximum)	100 MB/s	100 MB/s	100 MB/s
Security	ATA security	ATA security	ATA security
Seek times (typical read, including setting)			
Single track	3 ms	3 ms	3 ms
Average	13 ms	13 ms	13 ms
Maximum	24 ms	24 ms	24 ms
Logical blocks[2]	156,280,320	117,210,240	78,140,160
Disk rotational speed	5400 rpm	5400 rpm	5400 rpm
Operating temperature	5°C to 55°C (41°F to 131°F)	5°C to 55°C (41°F to 131°F)	5°C to 55°C (41°F to 131°F)

[1] 1 GB = 1,073,741,824 bytes.

[2] Actual drive specifications may differ slightly.

Certain restrictions and exclusions apply. Consult the HP Customer Support Center for details.

Table 6-6
External AC Adapter

Weight		
AC adapter	0.29 kg	0.65 lb
Power cord	0.13 kg	0.29 lb
Power supply		
Operating voltage	90 to 264 VAC RMS	
Operating current	1.6 A RMS	
Operating frequency range	47 to 63 Hz AC	
Maximum transient	4/50 kV	

Table 6-7
6-cell, Li-Ion Battery Pack

Dimensions		
Height	2.3 cm	0.90 in
Width	6.3 cm	2.48 in
Depth	20.7 cm	8.15 in
Weight	0.39 kg	0.86 lb
Energy		
Voltage	11.1 V	
Amp-hour capacity	3.96 Ah	
Watt-hour capacity	40 Wh	
Temperature		
Operating	5°C to 45°C	41°F to 113°F
Nonoperating	-20°C to 60°C	-4°F to 140°F
Recharge time		
System in Standby mode	2 to 3 hours	
System on (depending on system power consumption)	2 to 5 hours	

Table 6-8
24X Max DVD+RW/R and CD-RW Combo Drive

Applicable disc	DVD-5, DVD-9, DVD-10 CD-ROM (Mode 1 and 2) CD Digital Audio CD-XA ready (Mode 2, Form 1 and 2) CD-I ready (Mode 2, Form 1 and 2) CD-R (read only) CD Plus Photo CD (single/multisession) CD-Bridge	
Center hole diameter	1.5 cm	0.59 in
Disc diameter		
Standard disc	12 cm	4.72 in
Mini disc	8 cm	3.15 in
Disc thickness	1.2 mm	0.047 in
Track pitch	0.74 µm	
Access time		
Random	< 150 ms	
Full stroke	< 225 ms	
Audio output level	Line-out, 0.7 Vrms	
Cache buffer	128 KB/s	
Data transfer rate		
CD-R (24X)	3,600 KB/s (150 KB/s at 1X CD rate)	
CD-RW (10X)	1,500 KB/s (150 KB/s at 1X CD rate)	
CD-ROM (24X)	3,600 KB/s (150 KB/s at 1X CD rate)	
DVD (8X)	10,800 KB/s (1,352 KB/s at 1X DVD rate)	
Multiword DMA mode 2	16.6 MB/s	
Startup time	< 15 seconds	
Stop time	< 6 seconds	

Table 6-9
24X Max DVD/CD-RW Combo Drive

Applicable disc	DVD-5, DVD-9, DVD-10 CD-ROM (Mode 1 and 2) CD Digital Audio CD-XA ready (Mode 2, Form 1 and 2) CD-I ready (Mode 2, Form 1 and 2) CD-R (read only) CD Plus Photo CD (single/multisession) CD-Bridge	
Center hole diameter	1.5 cm	0.59 in
Disc diameter		
Standard disc	12 cm	4.72 in
Mini disc	8 cm	3.15 in
Disc thickness	1.2 mm	0.047 in
Track pitch	0.74 µm	
Access time		
Random	< 150 ms	
Full stroke	< 225 ms	
Audio output level	Line-out, 0.7 Vrms	
Cache buffer	128 KB/s	
Data transfer rate		
CD-R (24X)	3,600 KB/s (150 KB/s at 1X CD rate)	
CD-RW (10X)	1,500 KB/s (150 KB/s at 1X CD rate)	
CD-ROM (24X)	3,600 KB/s (150 KB/s at 1X CD rate)	
DVD (8X)	10,800 KB/s (1,352 KB/s at 1X DVD rate)	
Multiword DMA mode 2	16.6 MB/s	
Startup time	< 15 seconds	
Stop time	< 6 seconds	

Table 6-10
8X DVD-ROM Drive

Applicable disc	DVD-5, DVD-9, DVD-10 CD-ROM (Mode 1 and 2) CD Digital Audio CD-XA ready (Mode 2, Form 1 and 2) CD-I ready (Mode 2, Form 1 and 2) CD-R (read only) CD Plus Photo CD (single/multisession) CD-Bridge	
Center hole diameter	1.5 cm	0.59 in
Disc diameter		
Standard disc	12 cm	4.72 in
Mini disc	8 cm	3.15 in
Disc thickness	1.2 mm	0.047 in
Track pitch	0.74 µm	
Access time		
Random DVD media	< 150 ms	
Full stroke DVD media	< 225 ms	
Random CD media	< 110 ms	
Full stroke CD media	< 200 ms	
Audio output level	Line-out, 0.7 Vrms	
Cache buffer	512 KB/s	
Data transfer rate		
Max 24X CD	3,600 KB/s (150 KB/s at 1X CD rate)	
Max 8X DVD	10,800 KB/s (1,352 KB/s at 1X DVD rate)	
Multiword DMA mode 2	16.6 MB/s	
Startup time	< 10 seconds	
Stop time	< 3 seconds	

Table 6-11
24X CD-ROM Drive

Applicable disc	DVD-5, DVD-9, DVD-10 CD-ROM (Mode 1 and 2) CD Digital Audio CD-XA ready (Mode 2, Form 1 and 2) CD-I ready (Mode 2, Form 1 and 2) CD-R (read only) CD Plus Photo CD (single/multisession) CD-Bridge	
Center hole diameter	1.5 cm	0.59 in
Disc diameter		
Standard disc	12 cm	4.72 in
Mini disc	8 cm	3.15 in
Disc thickness	1.2 mm	0.047 in
Track pitch	1.6 µm	
Access time		
Random	< 150 ms	
Full stroke	< 300 ms	
Audio output level	Line-out, 0.7 Vrms	
Cache buffer	128 KB/s	
Data transfer rate		
Sustained (16X)	2,400 KB/s	
Variable	1,500 to 3,600 KB/s (10X to 24X)	
Multiword DMA mode 2	16.6 MB/s	
Startup time	< 8 seconds	
Stop time	< 4 seconds	

Table 6-12
System DMA

Hardware DMA	System Function
DMA0	Available for audio
DMA1*	Entertainment audio (default; alternate = DMA0, DMA3, none)
DMA2*	Diskette drive
DMA3	ECP parallel port LPT1 (default; alternate = DMA0, none)
DMA4	DMA controller cascading (not available)
DMA5*	Available for PC Card
DMA6	Not assigned
DMA7	Not assigned

*PC Card controller can use DMA 1, 2, or 5.

Table 6-13
System Interrupts

Hardware IRQ	System Function
IRQ0	System timer
IRQ1	Keyboard controller
IRQ2	Cascaded
IRQ3	COM2
IRQ4	COM1
IRQ5	Audio (default)*
IRQ6	Diskette drive
IRQ7	Parallel port
IRQ8	RTC
IRQ9	Assigned by operating system
IRQ10	Assigned by operating system
IRQ11	Assigned by operating system
IRQ12	Internal point stick or external mouse
IRQ13	Infrared
IRQ14	Primary IDE interface
IRQ15	Secondary IDE interface
✎	PC Cards may assert IRQ3, IRQ4, IRQ5, IRQ7, IRQ9, IRQ10, IRQ11, or IRQ15. Either the infrared or the serial port may assert IRQ3 or IRQ4.

*Default configuration; audio possible configurations are IRQ5, IRQ7, IRQ9, IRQ10, or none.

Table 6-14
System I/O Addresses

I/O Address (hex)	**System Function** (shipping configuration)
000 - 00F	DMA controller 1
010 - 01F	Unused
020 - 021	Interrupt controller 1
022 - 024	Opti chipset configuration registers
025 - 03F	Unused
02E - 02F	87334 “Super I/O” configuration for CPU
040 - 05F	Counter/timer registers
044 - 05F	Unused
060	Keyboard controller
061	Port B
062 - 063	Unused
064	Keyboard controller
065 - 06F	Unused
070 - 071	NMI enable/RTC
072 - 07F	Unused
080 - 08F	DMA page registers
090 - 091	Unused
092	Port A
093 - 09F	Unused
0A0 - 0A1	Interrupt controller 2

Table 6-14
System I/O Addresses *(Continued)*

I/O Address (hex)	**System Function** (shipping configuration)
0A2 - 0BF	Unused
0C0 - 0DF	DMA controller 2
0E0 - 0EF	Unused
0F0 - 0F1	Coprocessor busy clear/reset
0F2 - 0FF	Unused
100 - 16F	Unused
170 - 177	Secondary fixed disk controller
178 - 1EF	Unused
1F0 - 1F7	Primary fixed disk controller
1F8 - 200	Unused
201	Joystick (decoded in ESS1688)
202 - 21F	Unused
220 - 22F	Entertainment audio
230 - 26D	Unused
26E - 26	Unused
278 - 27F	Unused
280 - 2AB	Unused
2A0 - 2A7	Unused
2A8 - 2E7	Unused
2E8 - 2EF	Reserved serial port

Table 6-14
System I/O Addresses *(Continued)*

I/O Address (hex)	**System Function** (shipping configuration)
2F0 - 2F7	Unused
2F8 - 2FF	Infrared port
300 - 31F	Unused
320 - 36F	Unused
370 - 377	Secondary diskette drive controller
378 - 37F	Parallel port (LPT1/default)
380 - 387	Unused
388 - 38B	FM synthesizer—OPL3
38C - 3AF	Unused
3B0 - 3BB	VGA
3BC - 3BF	Reserved (parallel port/no EPP support)
3C0 - 3DF	VGA
3E0 - 3E1	PC Card controller in CPU
3E2 - 3E3	Unused
3E8 - 3EF	Internal modem
3F0 - 3F7	“A” diskette controller
3F8 - 3FF	Serial port (COM1/default)
CF8 - CFB	PCI configuration index register (PCIDIVO-1)
CFC - CFF	PCI configuration data register (PCIDIVO-1)

A

Connector Pin Assignments

Table A-1
RJ-45 Network Interface

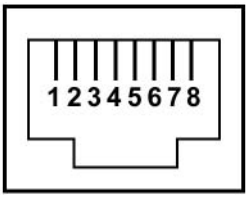

Pin	Signal	Pin	Signal
1	Transmit +	5	Unused
2	Transmit –	6	Receive –
3	Receive +	7	Unused
4	Unused	8	Unused

Table A-2
RJ-11 Modem

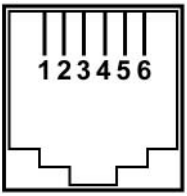

Pin	Signal	Pin	Signal
1	TX+ (ISDN modem)	4	Ring (modem)
2	TX- (ISDN modem)	5	RX+ (ISDN modem)
3	Tip (modem)	6	RX- (ISDN modem)

Table A-3
Universal Serial Bus

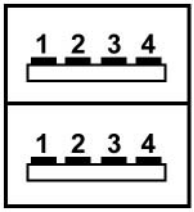

Pin	Signal	Pin	Signal
1	+5 VDC	3	Data +
2	Data –	4	Ground

Table A-4
S-Video

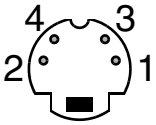

Pin	Signal	Pin	Signal
1	Ground (Y)	3	Y-Luminance (Intensity)
2	Ground (C)	4	C-Chrominance (Color)

Table A-5
External Monitor

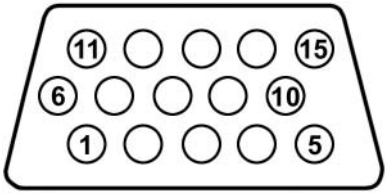

Pin	Signal	Pin	Signal
1	Red analog	9	+5 VDC
2	Green analog	10	Ground
3	Blue analog	11	Monitor detect
4	Not connected	12	DDC 2B data
5	Ground	13	Horizontal sync
6	Ground analog	14	Vertical sync
7	Ground analog	15	DDC 2B clock
8	Ground analog		

Table A-6
Audio Line-Out

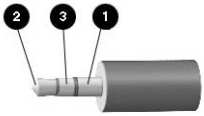

Pin	Signal
1	Ground
2	Left audio out
3	Right audio out

Table A-7
Microphone

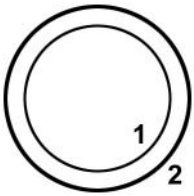

Pin	Signal	Pin	Signal
1	Audio in	2	Ground

Table A-8
Parallel

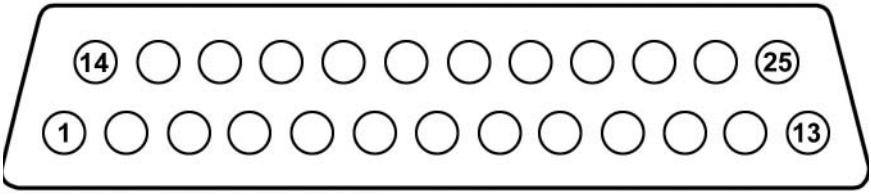

Pin	Signal	Pin	Signal
1	Strobe	14	Auto linefeed
2	Data bit 0	15	Error
3	Data bit 1	16	Initialize paper
4	Data bit 2	17	Select in
5	Data bit 3	18	Ground
6	Data bit 4	19	Ground
7	Data bit 5	20	Ground
8	Data bit 6	21	+5VS
9	Data bit 7	22	PTF
10	Acknowledge	23	EXTFDD_VCC (+5V)
11	Busy	24	Ground
12	Paper end	25	Ground
13	Select		

Table A-9
Serial

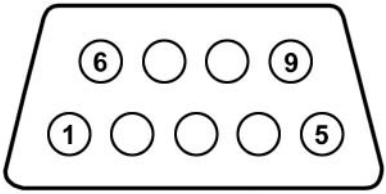

Pin	Signal	Pin	Signal
1	Carrier detect	6	Data set ready
2	Receive data	7	Ready to send
3	Transmit data	8	Clear to send
4	Data terminal ready	9	Ring indicator
5	Ground		

B

Power Cord Requirements

The wide range input feature of the notebook permits it to operate from any line voltage from 100 to 120 or 220 to 240 V AC.

The power cord included with the notebook meets the requirements for use in the country where the equipment is purchased.

Power cords for use in other countries must meet the requirements of the country where the notebook is used. For more information on power cord requirements, contact an HP authorized reseller or service provider.

General Requirements

The requirements listed below are applicable to all countries:

- The length of the power cord must be at least 1.5 m (5.00 ft) and a maximum of 2.0 m (6.50 ft).
- All power cords must be approved by an acceptable accredited agency responsible for evaluation in the country where the power cord will be used.
- The power cord must have a minimum current capacity of 10 amps and a nominal voltage rating of 125 or 250 V AC, as required by each country's power system.
- The appliance coupler must meet the mechanical configuration of an EN 60 320/IEC 320 Standard Sheet C13 connector for mating with the appliance inlet on the back of the notebook.

Country-Specific Requirements

3-Conductor Power Cord Requirements		
Country	**Accredited Agency**	**Applicable Note Number**
Australia	EANSW	1
Austria	OVE	1
Belgium	CEBC	1
Canada	CSA	2
Denmark	DEMKO	1
Finland	FIMKO	1
France	UTE	1
Germany	VDE	1
Italy	IMQ	1
Japan	METI	3
The Netherlands	KEMA	1
Norway	NEMKO	1
Sweden	SEMKO	1
Switzerland	SEV	1

3-Conductor Power Cord Requirements *(Continued)*

Country	Accredited Agency	Applicable Note Number
United Kingdom	BSI	1
United States	UL	2

Notes

1. The flexible cord must be <HAR> Type HO5VV-F, 3-conductor, 1.0 mm^2 conductor size. Power cord fittings (appliance coupler and wall plug) must bear the certification mark of the agency responsible for evaluation in the country where it will be used.
2. The flexible cord must be Type SPT-3 or equivalent, No. 18 AWG, 3-conductor. The wall plug must be a two-pole grounding type with a NEMA 5-15P (15 A, 125 V) or NEMA 6-15P (15 A, 250 V) configuration.
3. The appliance coupler, flexible cord, and wall plug must bear a “T” mark and registration number in accordance with the Japanese Dentori Law. The flexible cord must be Type VCT or VCTF, 3-conductor, 1.00 mm^2 conductor size. The wall plug must be a two-pole grounding type with a Japanese Industrial Standard C8303 (7 A, 125 V) configuration.

C

Screw Listing

This appendix provides specification and reference information for the screws used in the notebook. All screws listed in this appendix are available in the Miscellaneous Screw Kit, spare part number 345057-001.

Table C-1
Torx T5M2.5×4.0 Screw

mm	Color	Qty.	Length	Thread	Head Width
	Silver	2	4.0 mm	2.5 mm	5.0 mm

Where used:

❶ Two screws that secure the hard drive to the hard drive frame (documented in Section 5.3)

Table C-2
Phillips PM3.0×3.5 Screw

mm	Color	Qty.	Length	Thread	Head Width
	Silver	2	3.5 mm	3.0 mm	4.5 mm

Where used:

❷ Two screws that secure the hard drive to the hard drive frame (documented in Section 5.3)

Table C-3
M2.0×10.0 Alignment Pin

mm	Color	Qty.	Length	Thread	Head Width
	Silver	2	10.0 mm	2.0 mm	4.0 mm

Where used:

❸ Two alignment pins that secure the hard drive to the hard drive frame (documented in Section 5.3)

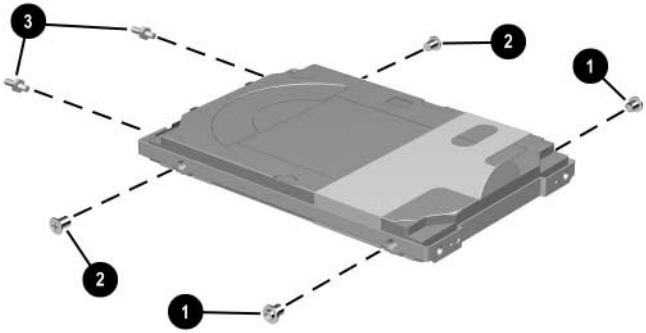

Torx T5M2.5×4.0 Screw, Phillips PM3.0×3.5 Screw, and M2.0×10.0 Alignment Pin Locations

Table C-4
Torx T8M2.0×6.0 Screw

mm	Color	Qty.	Length	Thread	Head Width
	Black	27	6.0 mm	2.0 mm	5.0 mm

Where used:

❶ One screw that secures the hard drive cover to the notebook (documented in Section 5.3)

❷ One screw that secures the Bluetooth cover to the notebook (documented in Section 5.6)

❸ One screw that secures the optical drive to the notebook (documented in Section 5.8)

❹ One screw that secures the keyboard to the notebook (documented in Section 5.9)

❺ One screw that secures the LED switch cover to the notebook (documented in Section 5.15)

❻ Four screws that secure the display assembly and hinge covers to the notebook (documented in Section 5.18)

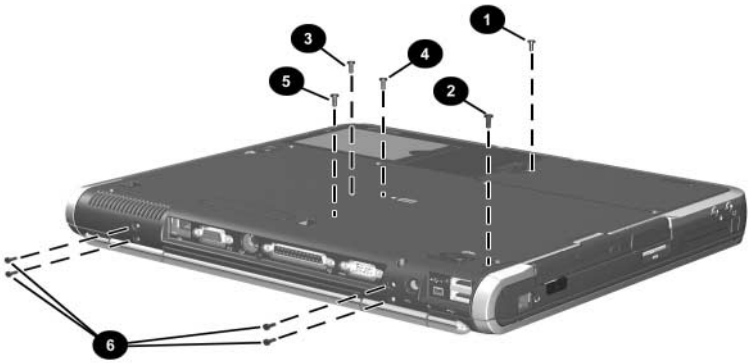

Torx T8M2.0×6.0 Screw Locations

Table C-4
Torx T8M2.0×6.0 Screw *(Continued)*

mm	Color	Qty.	Length	Thread	Head Width
	Black	27	6.0 mm	2.0 mm	5.0 mm

Where used:
Seventeen screws that secure the top cover to the notebook (documented in Section 5.19)

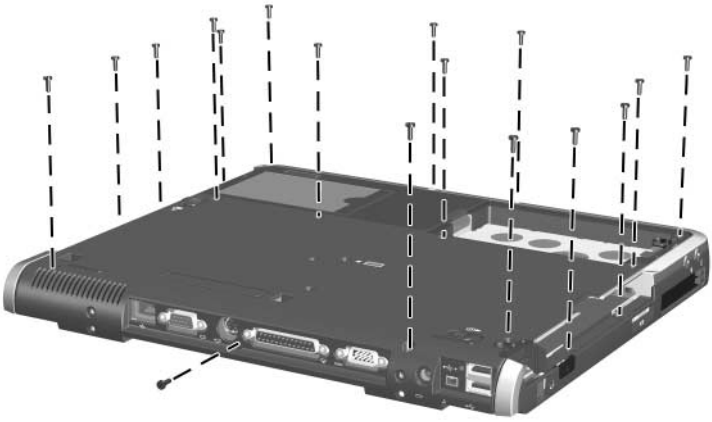

Torx T8M2.0×6.0 Screw Locations

Table C-4
Torx T8M2.0×6.0 Screw *(Continued)*

mm	Color	Qty.	Length	Thread	Head Width
	Black	27	6.0 mm	2.0 mm	5.0 mm

Where used:
One screw that secures the speaker to the top cover (documented in Section 5.20)

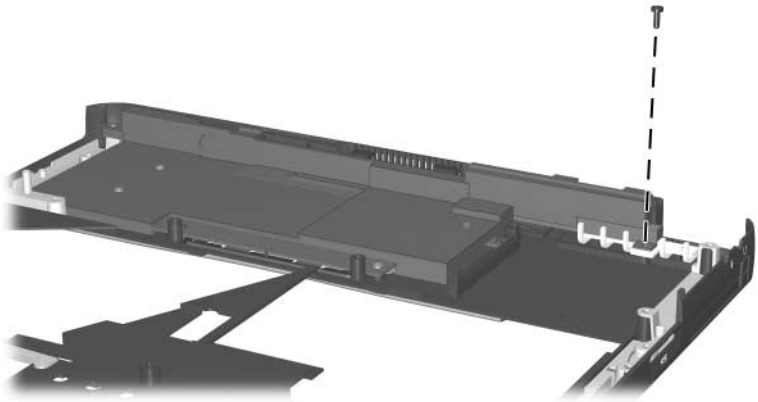

Torx T8M2.0×6.0 Screw Location

Table C-5
Phillips PM1.5×3.0 Screw

mm	Color	Qty.	Length	Thread	Head Width
	Black	3	3.0 mm	1.5 mm	3.0 mm

Where used:
Two screws that secure the Bluetooth board to the Bluetooth cover (documented in Section 5.6)

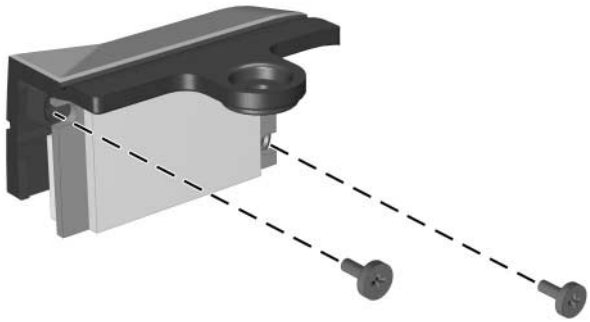

Phillips PM1.5×3.0 Screw Locations

Table C-6
Phillips PM3.5×3.0 Screw

mm	Color	Qty.	Length	Thread	Head Width
	Black	3	3.0 mm	1.5 mm	3.5 mm

Where used:
One screw that secures the security card to the system board (documented in Section 5.17)

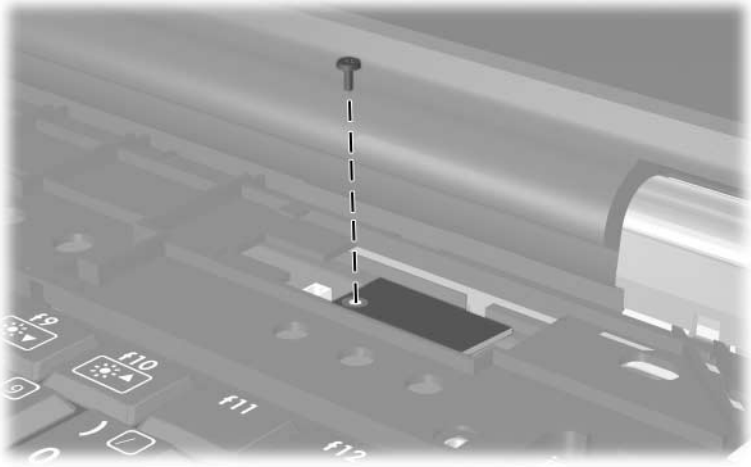

Phillips PM3.5×3.0 Screw Location

Table C-7
Torx T8M2.0×4.0 Screw

mm	Color	Qty.	Length	Thread	Head Width
	Pewter	20	4.0 mm	2.0 mm	5.0 mm

Where used:

❶ Two screws that secure the modem board to the system board (documented in Section 5.11)

❷ Two screws that secure the Mini PCI communications board and shield to the system board (documented in Section 5.12)

❸ Five screws that secure the heat sink to the system board (documented in Section 5.13)

❹ One screw that secures the top cover to the notebook (documented in Section 5.19)

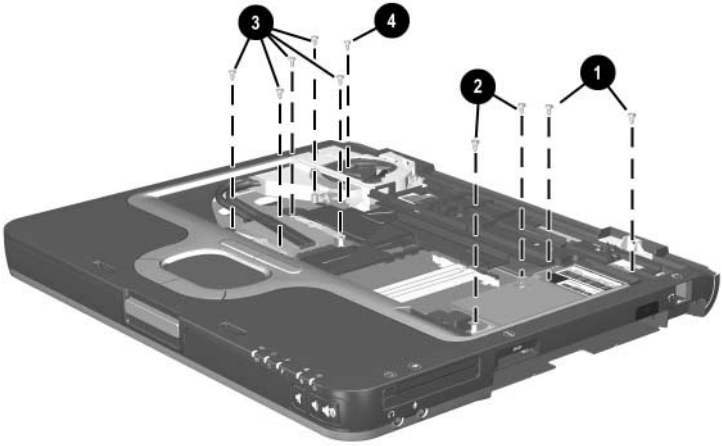

Torx T8M2.0×4.0 Screw Locations

Table C-7
Torx T8M2.0×4.0 Screw *(Continued)*

mm	Color	Qty.	Length	Thread	Head Width
	Pewter	20	4.0 mm	2.0 mm	5.0 mm

Where used:
Five screws that secure the speaker to the top cover (documented in Section 5.20)

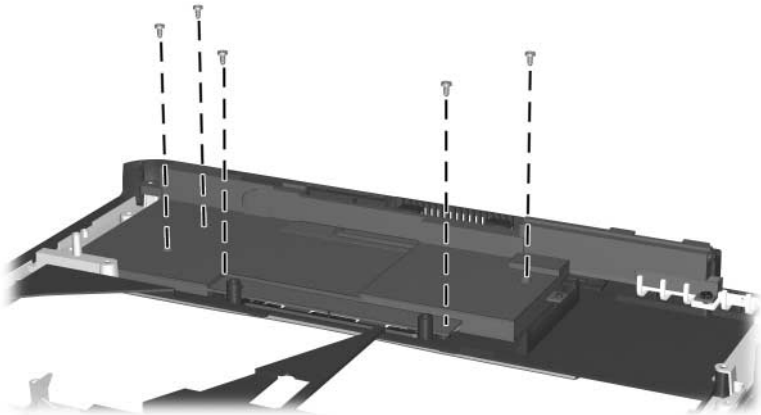

Torx T8M2.0×4.0 Screw Locations

Table C-7
Torx T8M2.0×4.0 Screw *(Continued)*

mm	Color	Qty.	Length	Thread	Head Width
	Pewter	20	4.0 mm	2.0 mm	5.0 mm

Where used:
One screw that secures the fan assembly to the notebook (documented in Section 5.22)

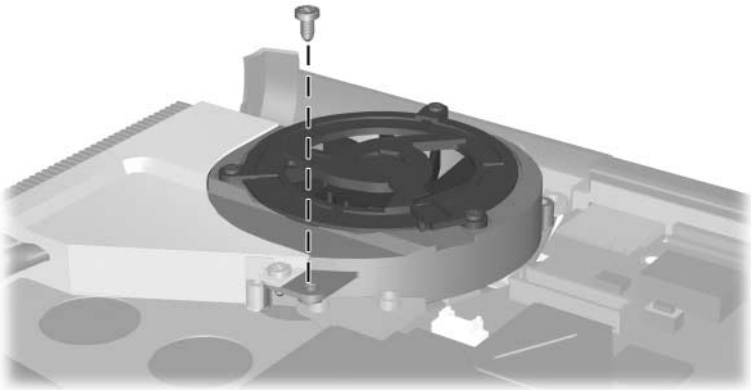

Torx T8M2.0×4.0 Screw Location

Table C-7
Torx T8M2.0×4.0 Screw *(Continued)*

mm	Color	Qty.	Length	Thread	Head Width
	Pewter	20	4.0 mm	2.0 mm	5.0 mm

Where used:
Four screws that secure the system board to the notebook (documented in Section 5.23)

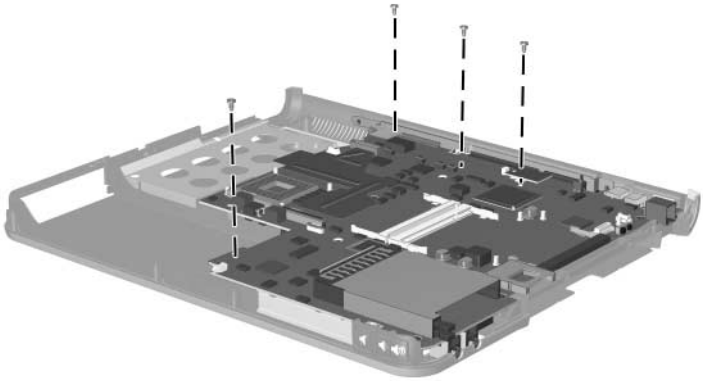

Torx T8M2.0×4.0 Screw Locations

Table C-8
Torx T8M2.0×3.5 Screw

mm	Color	Qty.	Length	Thread	Head Width
	Silver	3	3.5 mm	2.0 mm	5.0 mm

Where used:
Three screws that secure the TouchPad and bracket to the top cover (documented in Section 5.21)

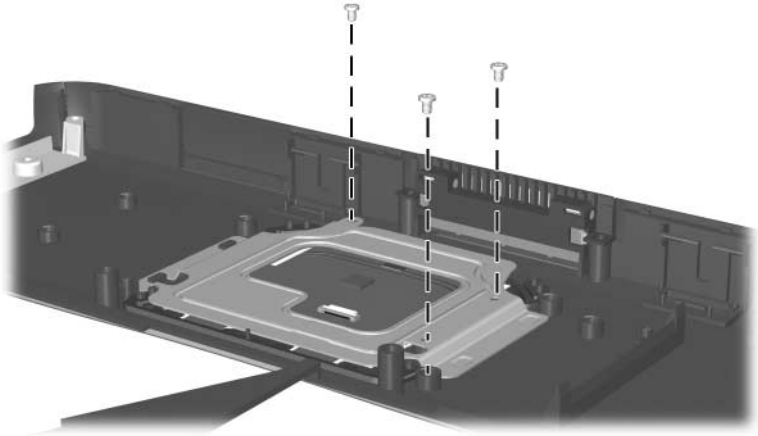

Torx T8M2.0×3.5 Screw Locations

Table C-9
Phillips PM1.5×4.0 Screw

mm	Color	Qty.	Length	Thread	Head Width
	Black	3	4.0 mm	1.5 mm	3.0 mm

Where used:
Three screws that secure the fan to the fan housing (documented in Section 5.22)

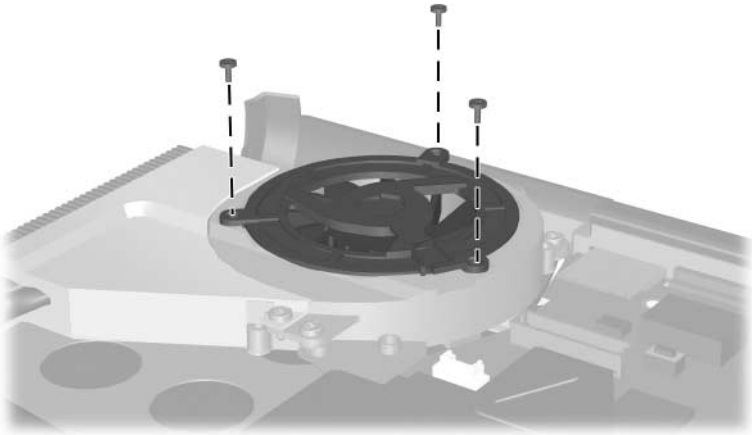

Phillips PM1.5×4.0 Screw Locations

Index

D

M

N

O

T

U

V

W