SINK SPECIFICATIONS

BLANCO STEELART

BLANCOPRECISION™ 10 SUPER SINGLE BOWL With 15" Drainboard

Model 513-692

BLANCO

FEATURED MODEL

513-692 **10" bowl depth**

ADDITIONAL MODELS

515-823 **Super Single 16" Bowl without Drainboard**
513-686 **Super Single Bowl without Drainboard**
513-691 **Large Bowl with Drainboard**
513-685 **Large Bowl without Drainboard**

FEATURES

- 18 gauge, 304 series stainless steel
- 18/10 chrome/nickel content
- Handcrafted from a single panel of stainless steel
- 10mm radius corners
- Elegant and functional drain grooves
- Long-lasting, easy-to-clean, satin polish finish
- Sound-deadening insulation
- Rear drain placement

CODE/STANDARDS COMPLIANCE

ASME 112.19.3-00
IAPMO/UPC listed

OPTIONAL ACCESSORIES

Sink Grids: 221-018, 221-024
Colanders: 218-772, 215-651
Cutting Board: 218-620

WARRANTY

Blanco America's BLANCOPRECISION™ 10 sinks feature a LIMITED LIFETIME WARRANTY to be free of all manufacturing defects under normal use. See our complete warranty for details.

While Blanco America endeavors to provide accurate information, all dimensions are nominal, cannot be guaranteed, and are subject to change or cancellation. Blanco America assumes no responsibility for use of superseded or voided specifications.

PRODUCT SPECIFICATION

Undermount sink to be 47" in length and 20" in front-to-back depth. Sink to be handcrafted from a single panel of 18 gauge, 304 series stainless steel, with 18/10 chrome/nickel content and satin polished finish. Sink to feature 10mm radius corners, rear drain placement, and integral drainboard. Sink to be Blanco Model 513-692, with bowl depth of 10".

MODEL 513-692

NOMINAL DIMENSIONS

MODEL	OVERALL	BOWL DEPTH	DRAIN DIAMETER
513-692	47 x 20	10	3-1/2

DXF cutout templates available on our web site.

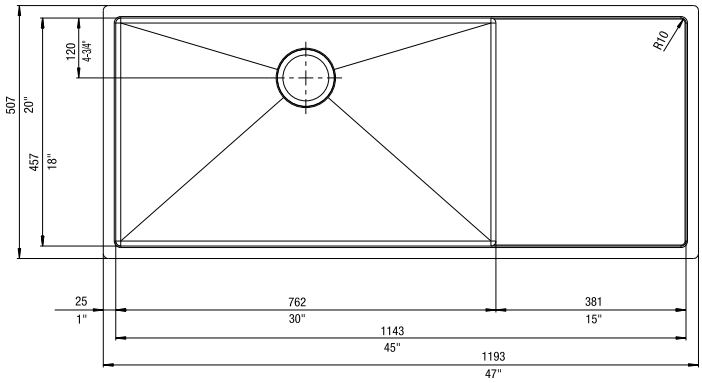

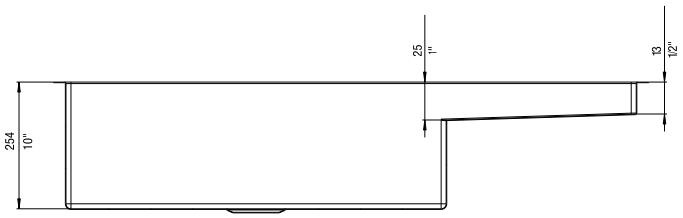

JOB INFORMATION

Job Name: _____

Contact: _____

Date Specified: _____

Specifier: _____

Contractor: _____

BLANCO AMERICA
800.451.5782
www.blancoamerica.com

© 2008 BLANCO AMERICA