ELKAY®
SPECIFICATIONS

Pacemaker® Single Bowl Lavatory Sink
Model PSLVR1917 Series

GENERAL
Fine quality single bowl lavatory sink seamlessly formed of #20 gauge, type 304 (18-8) nickel bearing stainless steel. Self-rimming.

DESIGN FEATURES
Bowl Depth: 6-1/8".

Bowl and Faucet Deck Recess: 3/16" below outside edge of sink.

Finish: Exposed surfaces are polished to a lustrous highlighted satin finish.

Underside: Fully undercoated to dampen sound and prevent condensation.

OTHER
Drain Opening: 1-5/8", 2-1/4" O.D. at top of countersink. Arranged for standard lavatory type drain.

PSLVR1917 comes complete with LKF294 overflow assembly.

PSLVR1917LO less overflow assembly. Outlet designed for standard lavatory drain fitting and includes drain housing and washer assembly.

Recommended Drain:

PSLVR1917 Series – LK174, LKAD174, LK175.

PSLVR1917LO Series – LK174LO, LKAD174LO.

NOTE: Unless otherwise specified, sink is furnished with a CS3 faucet hole configuration.

These sinks comply with ANSI Standard A112.19.3M.

These sinks are listed by the International Association of Plumbing and Mechanical Officials as meeting the requirements of the Uniform Plumbing Code.

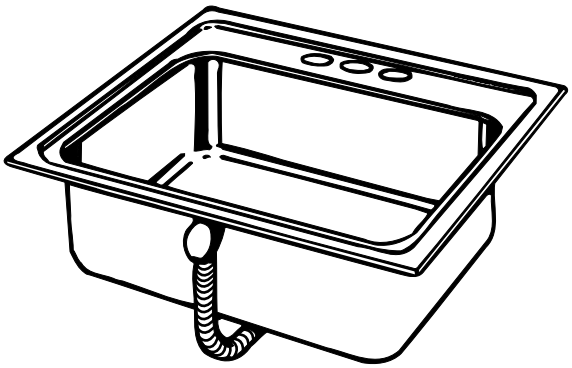

Model PSLVR1917CS3

SINK DIMENSIONS (INCHES)*

Model Number	Overall		Inside Bowl			With Overflow	Cutout in Countertop (1 1/2" Radius Corners)		1 1/4" Dia. Faucet Holes No. & Ctrs.	Minimum Cabinet Size	Ship. Wt. Lbs.
	L	D	L	W	D		L	W			
PSLVR1917	19	17	16	11 1/2	6 1/8	Yes	18 3/8	16 3/8	1, 2 or 3 - 4" Ctrs. CS3 - 2" Ctrs.	24	9 1/2
PSLVR1917LO	19	17	16	11 1/2	6 1/8	No	18 3/8	16 3/8	1, 2 or 3 - 4" Ctrs. CS3 - 2" Ctrs.	24	8 1/4

*Length is left to right. Width is front to back.

SEE OTHER SIDE FOR PRODUCT DIMENSIONS.

ALL DIMENSIONS IN INCHES, TO CONVERT TO MILLIMETERS MULTIPLY BY 25.4.

In keeping with our policy of continuing product improvement, Elkay reserves the right to change product specifications without notice.

This specification describes an Elkay product with design, quality and functional benefits to the user. When making a comparison of other producers' offerings, be certain these features are not overlooked.

Elkay
www.elkayusa.com

2222 Camden Court
Oak Brook, IL 60523

Printed in U.S.A.
©2005 Elkay

(Rev. 8/05) 1-70F

Pacemaker® Single Bowl Lavatory Sink
Models PSLVR1917 Series

ELKAY®
SPECIFICATIONS

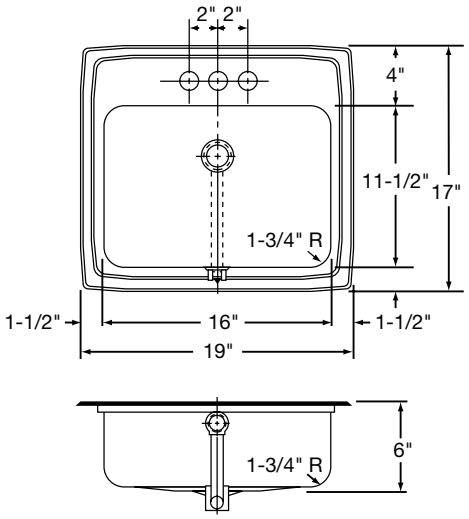

Model PSLVR1917CS3 Illustrated

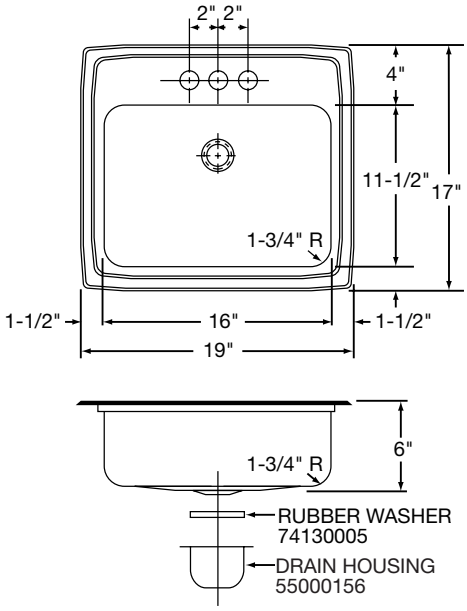

Model PSLVR1917LOCS3 Illustrated

HOLE DRILLING CONFIGURATIONS

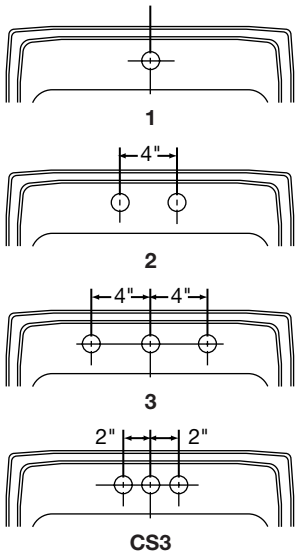

2222 Camden Court
Oak Brook, IL 60523

www.elkayusa.com

Printed in U.S.A.
©2005 Elkay