Axor Citterio Lavatory Mixer

39010XX1

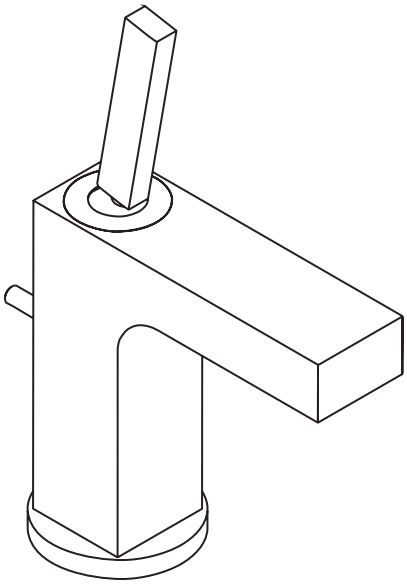

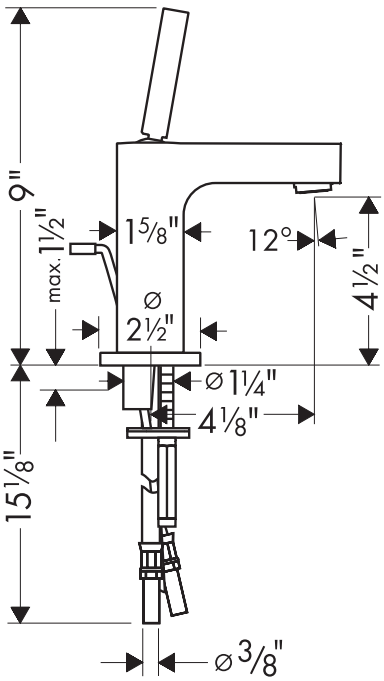

Product Features

- Award winning design
- Single hole installation
- Single handle with ceramic cartridge
- Cascade no-clog aerator
- 2.2 gpm
- Includes pop-up drain

Code Compliance

This unit meets or exceeds the following:

- ASME A112.18.1
- CSA B125.1
- Listed by IAPMO
- ADA compliant
- Approved for use in Massachusetts

Available Finishes

Chrome	39010001
Brushed Nickel	39010821

Installation Notes

- 3/8" supply hoses – requires 3/8" compression fittings

The measurements shown are for reference only.

Products and specifications shown are subject to change without notice.

Specification sheet revised 4/2008

AXOR® hansgrohe