SINK SPECIFICATIONS

BLANCO STEELART

BLANCOPRECISION 1-3/4 BOWL WITH APRON Undermount

Model 512-750-A

BLANCO

FEATURED MODEL

512-750-A 10" & 10" bowl depths

FEATURES

- 18 gauge, 304 series stainless steel
- 18/10 chrome/nickel content
- Handcrafted from a single panel of stainless steel
- Zero radius corners
- Elegant and functional drain grooves
- Long-lasting, easy-to-clean, satin polished finish
- Sound-deadening insulation
- Rear drain placement

CODE/STANDARDS COMPLIANCE

ASME 112.19.3-00

IAPMO/UPC listed

OPTIONAL ACCESSORIES

Sink Grids:	221-015 (Formerly 512-940)
	221-016 (Formerly 512-941)
Colanders:	215-651, 218-772
Cutting Board:	218-620

WARRANTY

Blanco America's BLANCOPRECISION SERIES sinks feature a "NO HASSLE" LIMITED LIFETIME WARRANTY to be free of all manufacturing defects under normal use. See our complete warranty for details.

While Blanco America endeavors to provide accurate information, all dimensions are nominal, cannot be guaranteed, and are subject to change or cancellation. Blanco America assumes no responsibility for use of superseded or voided specifications.

PRODUCT SPECIFICATION

Undermount sink to be 33" in length and 20" in front-to-back depth. Sink to be handcrafted from a single panel of 18 gauge, 304 series stainless steel, with 18/10 chrome/nickel content and satin polished finish. Sink to feature zero radius corners and rear drain placement. Sink to be Blanco Model 512-750-A, with left bowl depth of 10" and right bowl depth of 10".

MODEL 512-750-A

NOMINAL DIMENSIONS

MODEL	OVERALL	BOWL DEPTH LEFT	BOWL DEPTH RIGHT	DRAIN DIAMETER
512-750-A	33 x 20	10	10	3-1/2

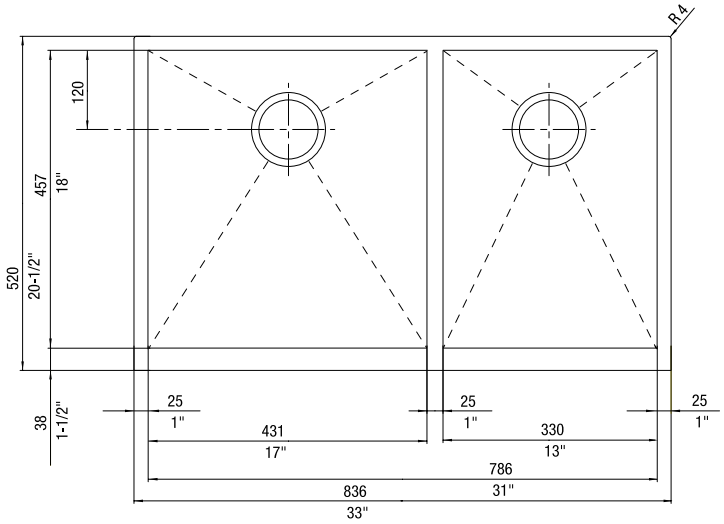

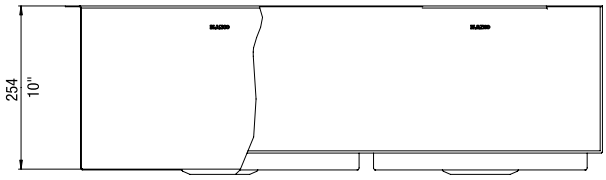

JOB INFORMATION

Job Name: _____

Contact: _____

Date Specified: _____

Specifier: _____

Contractor: _____

BLANCO AMERICA
800.451.5782
www.blancoamerica.com

© 2007 BLANCO AMERICA