American Standard
Style That Works Better

CADET™ ELONGATED PRESSURE-ASSISTED TOILET
VITREOUS CHINA

CADET™ ELONGATED PRESSURE-ASSISTED TOILET

❑ **2333.100**
- Vitreous china
- Low-consumption (6.0 Lpf/1.6 gpf)
- Elongated bowl
- Pressure-assisted siphon jet flush action
- Fully-glazed 2" ballpass trapway
- 10" x 12" water surface area
- Side-mounted chrome trip lever
- Close-coupled flushometer tank*
- Speed Connect® tank/bowl coupling system
- 2 bolt caps
- 100% factory flush tested

❑ **3099.016** Bowl with two bolt caps
❑ **4098.100** Tank complete with coupling components

Nominal Dimensions:
787 x 495 x 737mm
(31" x 19-1/2" x 29")

Fixture only, seat and supply by others

Recommended working pressure range
20 psi - 80 psi

Alternate Configurations Available:
❑ **3099.203** Elongated bowl only with slotted rim for bedpan holding
❑ **4098.700** Tank and tank cover only with tank cover locking device
❑ **4098.800** Tank and tank cover only with right hand trip lever
❑ **4098.900** Tank complete with right hand trip lever and tank cover locking device

Compliance Certifications -
Meets or Exceeds the Following Specifications:
- ASME A112.19.2 for Vitreous China Fixtures

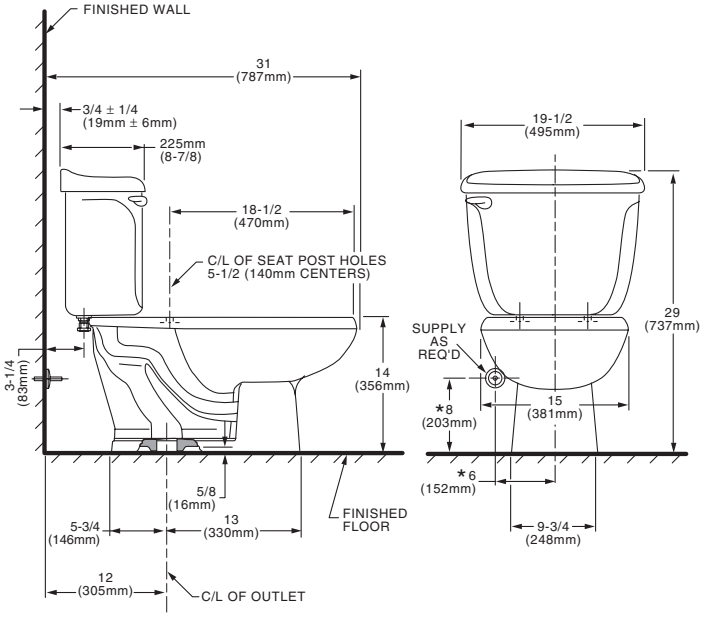

To Be Specified:
❑ Color: ❑ White ❑ Bone ❑ Linen ❑ Silver ❑ Fawn Beige ❑ Black
❑ Seat: American Standard #5324.019 "Rise and Shine" (with easy to clean lift-off hinge system) solid plastic closed front seat with cover.
❑ Seat: American Standard #5311.012 "Laurel" molded closed front seat with cover.
❑ Alternate Seat:
❑ Supply with Stop:

NOTES:
THIS COMBINATION IS DESIGNED TO ROUGH-IN AT A MINIMUM DIMENSION OF 305MM (12") FROM FINISHED WALL TO C/L OF OUTLET.
* DIMENSION SHOWN FOR LOCATION OF SUPPLY IS SUGGESTED. SUPPLY NOT INCLUDED WITH FIXTURE AND MUST BE ORDERED SEPARATELY.
FOR ADDITIONAL INFORMATION REFER TO INSTALLATION INSTRUCTIONS SUPPLIED.

IMPORTANT: Dimensions of fixtures are nominal and may vary within the range of tolerances established by ANSI Standard A112.19.2. These measurements are subject to change or cancellation. No responsibility is assumed for use of superseded or voided pages.

* Flushmate III tank system by Flushmate® Div. of Sloan Valve Co

© 2008 AS America Inc.