2 OPTIONAL ACCESSORIES

SHREDDER KIT
P/N 890209. *Shreds leaves, dramatically reducing total volume.*

HOSE KITS
For vacuuming in hard to reach areas.
Heavy Duty Vacuum Hose Kit P/N 900943.
4"(102mm) X 10' (3.05m)
Homeowners Vacuum Hose Kit P/N 900942.
4"(102mm) X 10' (3.05m)

NOZZLE WEAR PLATES
P/N 900810. *Extends nozzle life when used along curbs and hard surfaces.*

STANDARD FELT DEBRIS BAG P/N 900803. *Standard on KD models. For dusty conditions.*

OPTIONAL DEBRIS BAGS

TURF DEBRIS BAG
P/N 900806 *for use in leaves and grass in non-dusty conditions.*
HEAVY DUTY DEBRIS BAG
P/N 900798 *Reinforced lower panel.*
DEBRIS BAG COVER
P/N 900801 *Directs dust downward away from operator.*

REAR CASTER KIT
P/N 900655 *Improves maneuverability on hard surfaces.*

BAG SUPPORT KIT
P/N 900645 *Extends bag life by keeping bag from dragging ground.*

ZIPPERLESS BAG
P/N 890221 *For non dusty conditions that are damaging to zippers.*

1

BILLY GOAT INDUSTRIES, INC.

CE 95

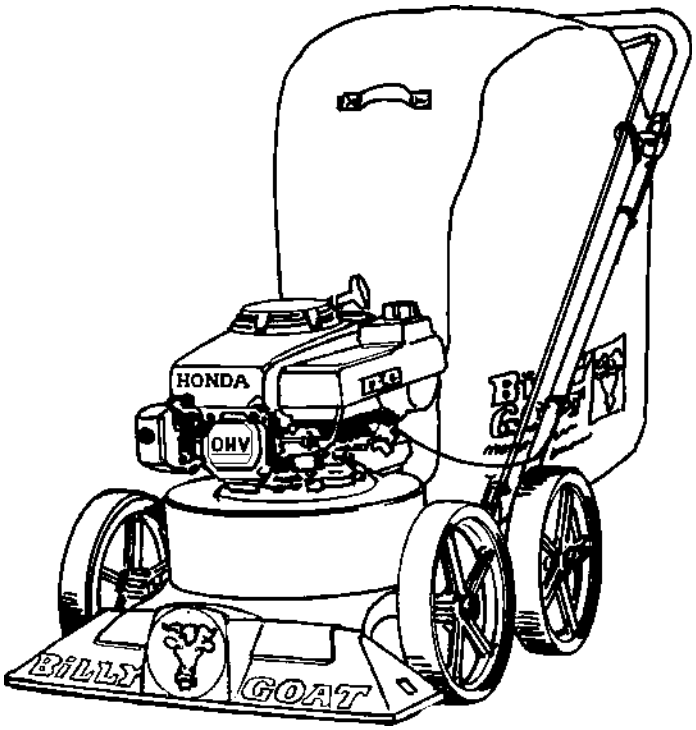

Thank You for Selecting
The Powerful *KD VACUUM CLEANER*

Operator Owner's Manual

KD502H, KD502ICQ, KD502Q

3

Specifications

	KD502H	KD502ICQ	KD502Q
ENGINE: H.P.	5.5 (4.1 kW)	5 (3.73 kW)	5 (3.73 kW)
ENGINE: TYPE	HONDA OHV	B&S I/C	B&S
ENGINE: FUEL CAP.	2.01 qt. (1.9 L)	1.5 qt. (1.4 L)	1.5 qt. (1.4 L)
ENGINE: OIL CAP.	0.69 qt.(0.65 L)	0.63 qt. (0.6 L)	0.63 qt. (0.6 L)
WEIGHT: UNIT	112# (50.8 kg)	103# (46.7 kg)	103# (46.7 kg)
WEIGHT: SHIPPING	135# (61.2 kg)	126# (57.2 kg)	126# (57.2 kg)
ENGINE WEIGHT:	36# (16.3 kg)	24.38# (11.05 kg)	24.38# (11.05 kg)

UNIT SIZE: OVERALL LENGTH: 62"(1.57m) OVERALL WIDTH 26.75" (0.68m) OVERALL HEIGHT 42" (1.07m)

5

IN THE INTEREST OF SAFETY

BEFORE STARTING ENGINE, READ AND UNDERSTAND THE "ENTIRE OPERATOR'S MANUAL & ENGINE MANUAL."

THIS SYMBOL MEANS WARNING OR CAUTION. DEATH, PERSONAL INJURY AND/OR PROPERTY DAMAGE MAY OCCUR UNLESS INSTRUCTIONS ARE FOLLOWED CAREFULLY.

WARNING: DO NOT

1. **DO NOT** run engine in an enclosed area. Exhaust gases contain carbon monoxide, an odorless and deadly poison.

2. **DO NOT** place hands or feet near moving or rotating parts.

3. **DO NOT** store, spill or use gasoline near an open flame, or devices such as a stove, furnace, or water heater which use a pilot light or devices which can create a spark.

4. **DO NOT** refuel indoors where area is not well ventilated. Outdoor refueling is recommended.

5. **DO NOT** fill fuel tank while engine is running. Allow engine to cool for 2 minutes before refueling. Store fuel in approved safety containers.

6. **DO NOT** remove fuel tank cap while engine is running.

7. **DO NOT** operate engine when smell of gasoline is present or other explosive conditions exist.

8. **DO NOT** operate engine if gasoline is spilled. Move machine away from the spill and avoid creating any ignition until the gasoline has evaporated.

9. **DO NOT** transport unit with fuel in tank.

10. **DO NOT** smoke when filling fuel tank.

11. **DO NOT** choke carburetor to stop engine. Whenever possible, gradually reduce engine speed before stopping.

12. **DO NOT** run engine at excessive speeds. This may result in injury & /or damage to unit.

13. **DO NOT** tamper with governor springs, governor links or other parts which may change the governed engine speed.

14. **DO NOT** tamper with the engine speed selected by the engine manufacturer.

15. **DO NOT** check for spark with spark plug or spark plug wire removed. Use an approved tester.

16. **DO NOT** crank engine with spark plug removed. If engine is flooded, place throttle in "FAST" position and crank until engine starts.

17. **DO NOT** strike flywheel with a hard object or metal tool as this may cause flywheel to shatter in operation. Use proper tools to service engine.

18. **DO NOT** operate engine without a muffler. Inspect periodically and replace, if necessary. If engine is equipped with muffler deflector, inspect periodically and replace, if necessary, with correct deflector.

19. **DO NOT** operate engine with an accumulation of grass, leaves, dirt or other combustible material in the muffler area.

20. **DO NOT** use this engine on any forest covered, brush covered, or grass covered unimproved land unless a spark arrester is installed on the muffler. The arrester must be maintained in effective working order by the operator. In the State of California the above is required by law (Section 4442 of the California Public Resources Code). Other states may have similar laws. Federal laws apply on federal lands.

21. **DO NOT** touch hot muffler, cylinder, or fins because contact may cause burns.

22. **DO NOT** run engine without air cleaner or air cleaner cover.

23. **DO NOT** operate during excessive vibration!

24. **DO NOT** leave machine unattended while in operation.

25. **DO NOT** park machine on a steep grade or slope.

WARNING: DO

1. **ALWAYS DO** remove the wire from the spark plug when servicing the engine or equipment TO PREVENT ACCIDENTAL STARTING.

2. **DO** keep cylinder fins and governor parts free of grass and other debris which can affect engine speed.

3. **DO** pull starter cord slowly until resistance is felt. Then pull cord rapidly to avoid kickback and prevent hand or arm injury.

4. **DO** examine muffler periodically to be sure it is functioning effectively. A worn or leaking muffler should be repaired or replaced as necessary.

5. **DO** use fresh gasoline. Stale fuel can gum carburetor and cause leakage.

6. **DO** check fuel lines and fittings frequently for cracks or leaks. Replace if necessary

7. **Follow** engine manufacturer operating and maintenance instructions.

8. **Inspect** machine and work area before starting unit.

6 *TABLE OF CONTENTS*

7 **SOUND**

SOUND TESTS

ε L_{WA} 96

Sound tests conducted were in accordance with 79/113/EEC and were performed on 05/03/94 under the conditions listed:

GENERAL CONDITION: Partly Cloudy

3 L_{pA} 109

TEMPERATURE: 60°F (15.5°C)

WIND SPEED: 5 MPH (8kmh)

WIND DIRECTION: N.E.

HUMIDITY: 70 %

BAROMETRIC PRESSURE: 29.8" Hg (757mm Hg)

OPERATOR

8 **VIBRATION**

VIBRATION LEVELS 2.7g

Vibration levels at the operators handles were measured in the vertical, lateral, and longitudinal directions using calibrated vibration test equipment. Tests were performed on 05/03/94 under the conditions listed:

GENERAL CONDITION: Partly Cloudy

TEMPERATURE: 60°F (15.5°C)

WIND SPEED: 5 MPH (8kmh)

WIND DIRECTION: N.E.

HUMIDITY: 70 %

BAROMETRIC PRESSURE: 29.8" Hg (757mm Hg)

9 GENERAL SAFETY

For your safety and the safety of others, these directions should be followed:

Do not operate this machine without first reading owner's manual and engine manufacturer's manual.

Use of Ear Protection is recommended while operating this machine.

Use of Eye and Breathing protection is recom-- mended when using this machine, especially in dry and dusty conditions. Optional bag cover directs dust toward ground, away from the operator.

- **DO NOT** place hands or feet inside nozzle intake opening neardebris outlet or near any moving parts.
- **DO NOT** start engine without debris bag and quick discon nect connected firmly in place to exhaust outlet.
- **DO NOT** start or operate machine with debris bag zipper open.
- **DO NOT** operate during excessive vibration.
- **DO NOT** remove bag until engine has been turned off and has come to a complete stop.
- **DO NOT** remove hose kit cap on nozzle until engine has been turned off and has come to a complete stop.
- **DO NOT** operate machine with hose cap, bag or hose removed.
- **DO NOT** use this machine for vacuuming **exclusively** sand, dust, fine dirt, rock, glass, string like material, grain, rags, cans, metal, bark or water.
- **DO NOT** operate this machine on slopes greater than 20%.
- **DO NOT** pick up any hot or burning debris, or any toxic or explosive material.
- **DO NOT** allow children to operate this equipment.

10 ASSEMBLY

Read all safety and operating instructions before assembling or starting this unit.

PUT OIL IN ENGINE BEFORE STARTING

Your Billy Goat is shipped from the factory in one carton, completely assembled except for the debris bag, upper handle, height adjustment rod and bag quick disconnect.

1. **ASSEMBLE** upper handle securely to lower handle stubs using handle screws (item 8), washers (item 25) and nut lock 5/16-18 (item 26), with screw heads facing inward toward debris bag. Otherwise, premature bag wear could result.
2. **ASSEMBLE** height adjustment rod (item 23), thru eye bolt (item 15), on upper handle and thru upper flange of height adjustment bracket (item18), thru spring (item 20), and thru lower flange of height adjustment bracket (item 18). Insert pin (item 22), between spring and lower flange of height adjustment bracket (see VIEW A on page 6). Slide grip (item 16), onto upper end of height adjustment rod (item 23).
3. **UNFOLD** the debris bag (item 1) and fasten bag neck to bag quick disconnect (item 12). Attach firmly to housing exhaust (item 52) see fig. 2.
4. **ATTACH** bag hanger straps to loops (item 11), preassembled to upper handle.
5. **ATTACH** throttle assy. (item 2), to handle using cable clamps (item 9).
6. **CONNECT** spark plug wire.

11 PACKING CHECKLIST

These items should be included in your carton. If any of these parts are missing, contact your dealer.

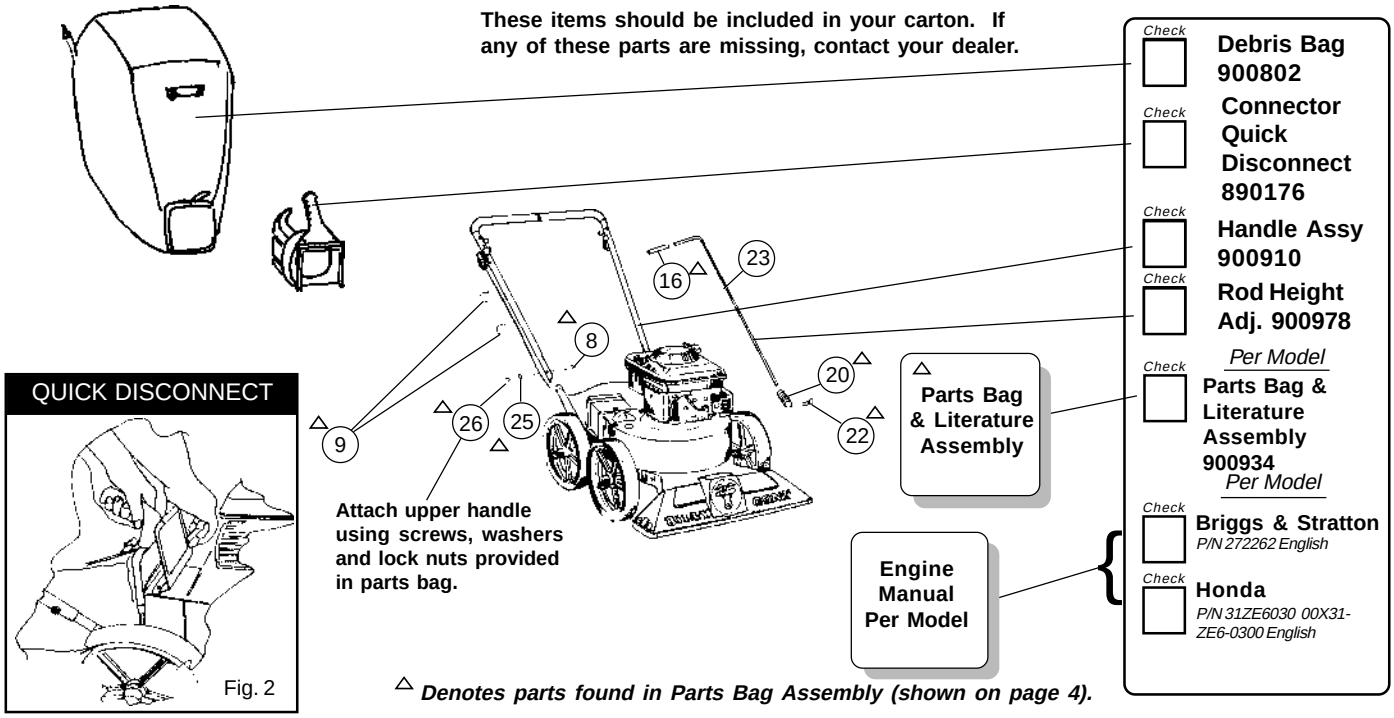

△ ***Denotes parts found in Parts Bag Assembly (shown on page 4).***

12 PARTS BAG & LITERATURE ASSY P/N 900934

PARTS BAG ASSEMBLY CHECKLIST P/N 900974

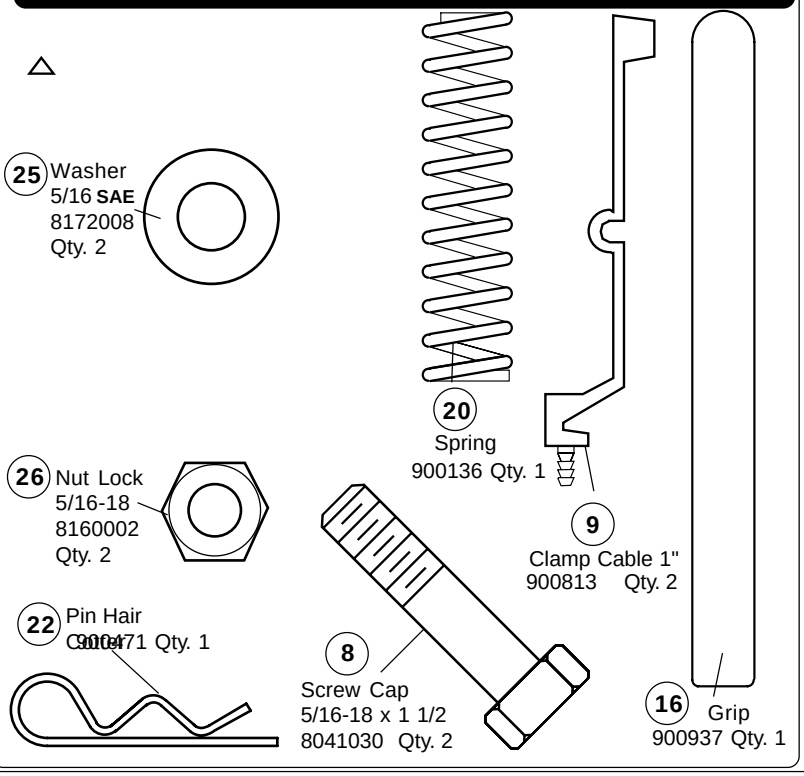

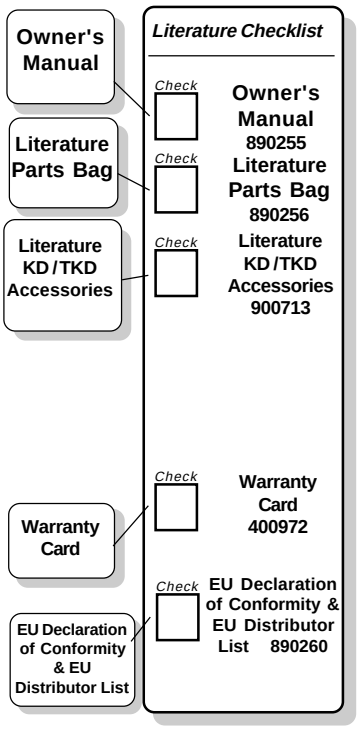

13 CONTROLS

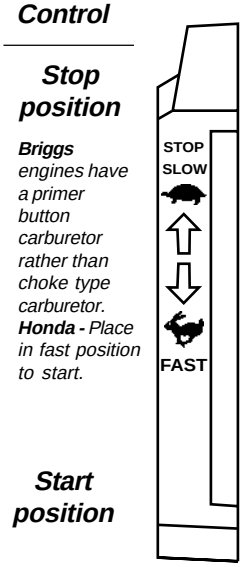

14 INSTRUCTION LABELS

These labels should be included on your Vacuum. If any of these labels are damaged, replace them before putting this equipment into operation. Item and part numbers are given to help in ordering replacement labels.

Label Do Not Fill While Engine Is Hot Item 63 Part No.400268

Label Read Owner's Manual Item 71 Part No.890301

Label Danger Flying Material Item 62 Part No.810736

Label Danger Keep Hands and Feet Away Item 70 Part No.400424

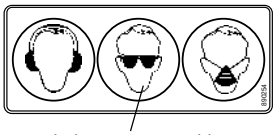

Label Ear Eye Breathing Item No. 13 Part No. 890254

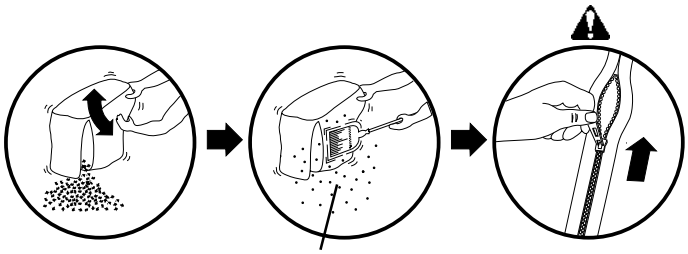

Debris Bag Label item 1

15 ENGINE LABELS

Honda

Briggs & Stratton

16 OPERATION

INTENDED USE: This machine is designed for vacuuming leaves, grass clippings and other types of organic litter. Debris mixed with cans, bottles and small amounts of sand can be vacuumed; however, it is not this machine's primary purpose. Vacuuming cans, bottles and sand will affect the longevity of your machine.

Do not operate if excessive vibration occurs. If excessive vibration occurs, shut engine off immediately and check for damaged or worn impeller, loose impeller bolt, loose impeller key, loose engine or lodged foreign objects. Note: See parts list for proper impeller bolt torque specifications. (See trouble shooting section on page 8).

Like all mechanical tools, reasonable care must be used when operating machine.

Inspect machine work area and machine before operating. Make sure that all operators of this equipment are trained in general machine use and safety.

PUT OIL IN ENGINE BEFORE STARTING

16.1 STARTING

ENGINE: See engine manufacturer's instructions for type and amount of oil and gasoline used. Engine must be level when checking and filling oil and gasoline.

ENGINE SPEED: Controlled by throttle lever on the handle. Under normal conditions, operate at minimum throttle to accomplish your current cleaning task.

FUEL VALVE: Move fuel valve to "ON" position (when provided on engine).
CHOKE: Operated with throttle control (Honda only).
PRIMER: Push primer on Briggs & Stratton Engines.
THROTTLE: Move remote throttle control to fast position. Pull starting rope to start engine.

IF YOUR UNIT FAILS TO START:
See Troubleshooting on page 8.

16.2 VACUUMING OPERATION

VACUUM NOZZLE HEIGHT ADJUSTMENT: is raised and lowered by pushing slightly downward on handle and pulling grip rod at left side of handle. The nozzle height can be adjusted during operation without stopping.

FOR MAXIMUM PICKUP: Adjust nozzle close to debris, but without blocking airflow into the nozzle. *NOTE*: Never bury nozzle into debris.

CLEARING A CLOGGED NOZZLE & EXHAUST: Turn engine off and wait for impeller to stop completely and disconnect spark plug wire. Wearing durable gloves, remove clog. **Danger**, the clog may contain sharp materials. Reconnect spark plug wire.

Nozzle Height Fine Adjustment For Hard Surface Use: Optimum nozzle height is 1/2" (12.7mm) above ground with engine not running. To adjust height, loosen screws (item 37), on quad plate. Prop front of nozzle up 1.0" (25.4mm) above ground. Keeping wheels on ground, re-tighten screws (item 37). Recheck and fine adjust to obtain 1/2" (12.7mm) at nozzle front (see fig. 1).

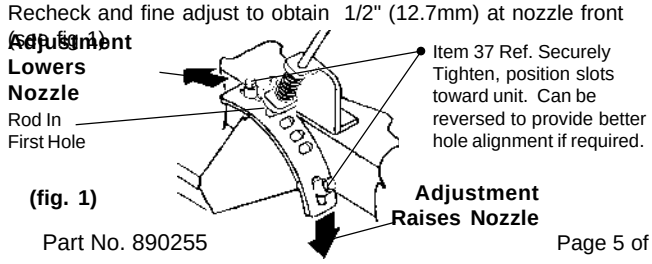

(fig. 1)

16.3 DEBRIS BAG

Debris bags are normal replaceable wear items.

Note: *Frequently empty debris to prevent bag overloading with more weight than you can lift.*

An optional bag and dust cover is available for use where debris will be vacuumed in dusty conditions **(see Optional Accessories shown on page 1)**.

DO NOT place bag on or near hot surface, such as engine. Run engine at 1/2 throttle for first 1/2 hour to condition new bag. Your new bag requires a break-in period to condition the pores of the material against premature blockage. The entire bag surface serves as a filter, and must be able to breath to have good vacuum performance.
Be sure engine has come to a complete stop before removing or emptying bag.
This vacuum is designed for picking up trash, organic material and other similar debris (see Safety Warnings page 2 & 3). However, many vacuums are used where dust is mixed with trash. Your unit can intermittently vacuum in dusty areas. Dust is the greatest cause of lost vacuum performance. However, following these rules will help maintain your machine's ability to vacuum in dusty conditions:

- Run machine at idle to quarter throttle.
- The debris bag must be cleaned more frequently. A vacuum with a clean, pillow soft bag will have good pickup performance. One with a dirty, tight bag will have poor pickup performance. If dirty, empty debris and vigorously shake bag free-of-dust.
- Machine or pressure-wash debris bag if normal cleaning does not fully clean bag. Bag should be thoroughly dry before use.

Having one or more spare debris bags is a good way to reduce down time while dirty bags are being cleaned.

- **DO NOT** leave debris in bag while in storage.

16.4 HANDLING & TRANSPORTING:

Using two people to lift machine is recommended. Lift holding the handle and front of nozzle. Secure in place during transport.

16.5 STORAGE

Never store engine indoors or in enclosed poorly ventilated areas with fuel in tank, where fuel fumes may reach an open flame, spark or pilot light, as on a furnace, water heater, clothes dryer or other gas appliance.
If engine is to be unused for 30 days or more, prepare as follows:
Be sure engine is cool. Do not smoke. Remove all gasoline from carburetor and fuel tank to prevent gum deposits from forming on these parts and causing possible malfunction of engine. Drain fuel outdoors, into an approved container, away from open flame. Run engine until fuel tank is empty and engine runs out of gasoline.

NOTE: Fuel stabilizer (such as Sta-Bil) is an acceptable alternative in minimizing the formation of fuel gum deposits during storage. Add stabilizer to gasoline in fuel tank or storage container. Always follow mix ratio found on stabilizer container. Run engine at least 10 min. after adding stabilizer to allow it to reach the carburetor.

Do not store with debris in bag.

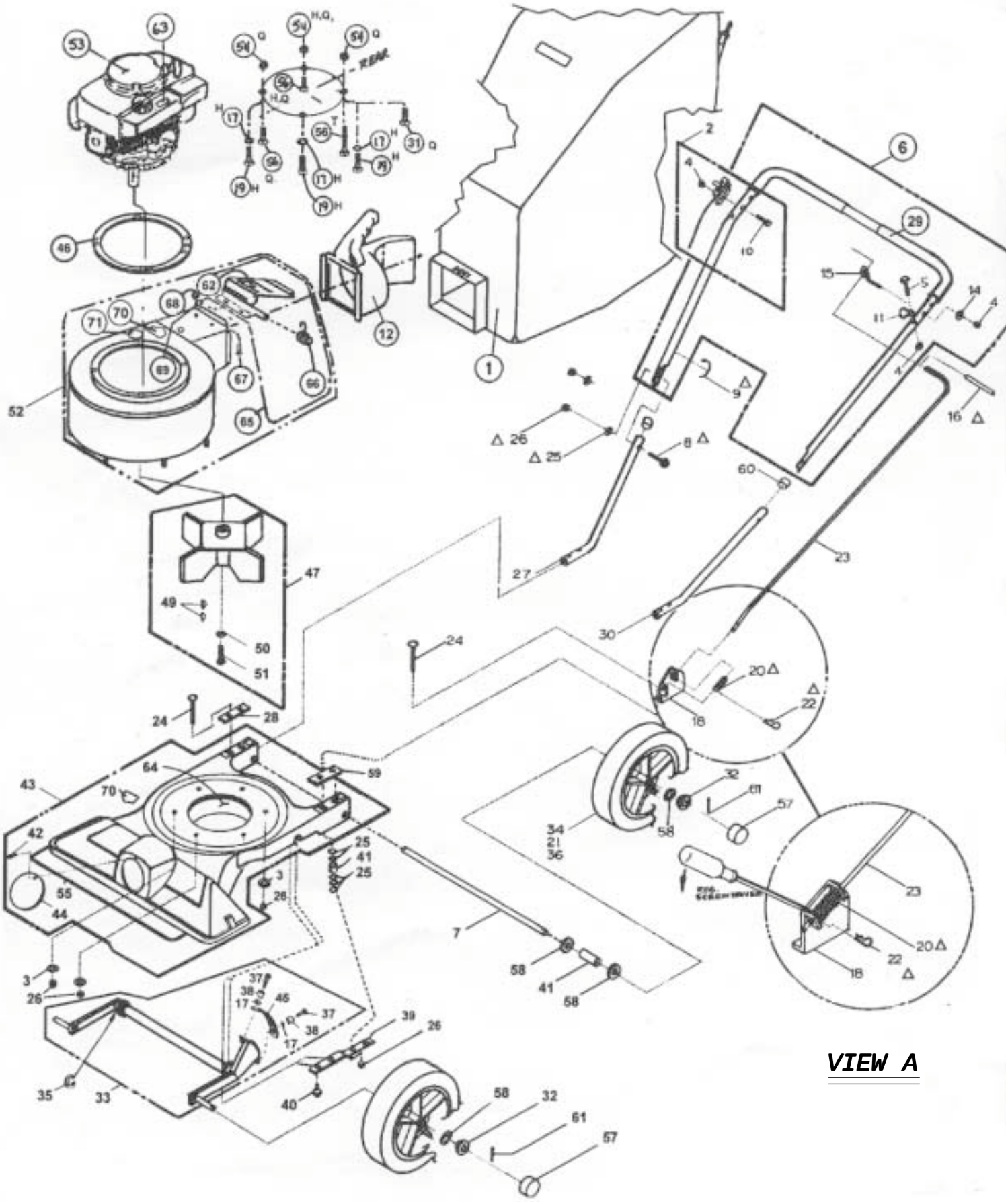

BILLY GOAT INDUSTRIES, INC.

KD502H, KD502ICQ, KD502Q

Item No.	19 PARTS LIST Description	KD502H Part No.	QTY	KD502ICQ Part No.	QTY	KD502Q Part No.	QTY
1	DEBRIS BAG (INCL. (2) OF 4,5,11) Service Assembly	900803	1	900803	1	900803	1
2	THROTTLE ASSEMBLY (INCL. 1 EACH ITEMS 4, 10)	810135	1	810135	1	810135	1
3	WASHER - FLAT FENDER (11/32 X 1 - 1/4 X 0.05)	*8172020	6	*8172020	6	*8172020	6
4	NUT LOCK (1/4 - 20 NC)	*8160001	4	*8160001	4	*8160001	4
5	SCREW, CAP (1/4 - 20 NC X 1 -1/2 HEX)	*8041008	2	*8041008	2	*8041008	2
6	HANDLE ASSY (INCL. ITEMS 4(2), 5(2), 11(2), 29(2), 15, 4, 14)	900910	1	900910	1	900910	1
7	AXLE REAR - PUSH	900925	1	900925	1	900925	1
8	SCREW, CAP 5/16 NC X 1 -1/2	*8041030	2	*8041030	2	*8041030	2
9	CLAMP CABLE 1”	900813	2	900813	2	900813	2
10	SCREW, CAP 1/4 - 20 NC X 1 - 3/4 HEX	*8041009	1	*8041009	1	*8041009	1
11	ROD - BAG LOOP	800178	2	800178	2	800178	2
12	CONNECTOR QUICK DISCONNECT	890176	1	890176	1	890176	1
13	LABEL EAR EYE BREATHING	890254	1	890254	1	890254	1
14	WASHER - FLAT CUT 1/4	*8171002	1	*8171002	1	*8171002	1
15	BOLT EYE 90	900913	1	900913	1	900913	1
16	GRIP	900937	1	900937	1	900937	1
17	WASHER LOCK EXT. 5/16	*8181008	5	*8181008	2	*8181008	2
18	BRACKET - HT. ADJ.	900932	1	900932	1	900932	1
19	SCREW, CAP 5/16 NFX 1”	400164	3	-	-	-	-
20	SPRING	900136	1	900136	1	900136	1
21	TIRE - ONLY (PER ASSY)	900507	1	900507	1	900507	1
22	PIN - HAIR COTTER	900471	1	900471	1	900471	1
23	ROD HT. ADJ. PLUNGER	900978	1	900978	1	900978	1
24	BOLT - CARRIAGE, 5/16 - 18 NC X 3 - 1/2 LG	*8024050	4	*8024050	4	*8024050	4
25	WASHER - FLAT 5/16 SAE	*8172008	22	*8172008	22	*8172008	22
26	NUT LOCK 5/16 - 18 NC HEX	*8160002	12	*8160002	12	*8160002	12
27	HANDLE STUB (R.H.)	900911	1	900911	1	9000911	1
28	PLATE - HANDLE SUPPORT	900933	1	900933	1	900933	1
29	GRIP HANDLE	400570	2	400570	2	400570	2
30	HANDLE STUB (L.H.)	900912	1	900912	1	900912	1
31	SCREW CAP 5/16-18 X 2 - 1/2 LG.	-	-	*8041034	1	*8041034	1
32	WASHER HUB CAP 1/2 I.D.	900927	4	900927	4	900927	4
33	AXLE FRONT MECH. ASSY. (INCL. 17, 37, 38, 45)	900749	1	900749	1	900749	1
34	WHEEL ASS’Y CAST (INCLUDE 21, 36)	900509	4	900509	4	900509	4
35	WASHER 0.75 “C”	900997	0-1	900997	0-1	900997	0-1
36	BRG - ONLY (PER ASSY.)	900498	2	900498	2	900498	2
37	SCREW CAP 5/16-18 X 1”	*8041028	2	*8041028	2	*8041028	2
38	SPACER 0.340” I. D. X 0.330” LG.	900745	2	900745	2	900745	2
39	PLATE - BRACE REAR	900905	2	900905	2	900905	2
40	SCREW CAP 1/4-20 X 1/2	*8041002	4	*8041002	4	*8041002	4
41	SPACER	900926	6	900926	6	900926	6
42	SCREW, SELF TAPPING 10 - 24 NC X 1/2 LG.	*8123086	1	*8123086	1	*8123086	1
43	NOZZLE MAIN FRAM. ASS’Y - GREEN (INCL. item (qty) 44 (1), 42 (1) , 55(1), 64(1), 70(1))	900931	1	900931	1	900931	1
44	PLUG	900146	1	900146	1	900146	1
45	PLATE QUAD ADJUSTABLE	900746	1	900746	1	900746	1
46	GASKET	-	-	800411	1	800411	1
47	IMPELLER ASS’Y’ (INCLUDES iTEM 49, 50, 51)	900003 - S	1	900215 -S	1	900215 - S	1
48	PARTS BAG ASS’Y (INCL item (QTY), 9 (2), 25 (2), 26 (2), 8 (2) 20 (1), 22 (1), 16 (1)	900974	1	900974	1	900974	1
49	KEY HI PRO 5/32 X 5/8	900162	1	900162	1	900162	1
50	WASHER LOCK 3/8 TWISTED TOOTH	400502	1	400502	1	400502	1
51	SCREW CAP 3/8-24 x 1" TORQUE 50 FT- LBS (68 N•m)	900154	1	900154	1	900154	1
52	HOUSING ASS’Y (INCL. 1 EA . ITEMS 13, 65, 67, 68, 69, 70)	900757	1	900757	1	900757	1
53	ENGINE 5.5 HP HONDA	900615	1	-	-	-	-
	ENGINE 5 HP BRIGGS & STRATTON "IC" QUANTUM	-	-	900273	1	-	-
	ENGINE 5 HP BRIGGS & STRATTON QUANTUM	-	-	-	-	900622	1
54	NUT LOCK 5/16 - 18 HEX	*8160002	1	*8160002	3	*8160002	3
55	ROD - BUMPER	900939	1	900939	1	900939	1
56	SCREW CAP 5/16 - 18 x 1 - 1/4 LONG	-	-	*8041029	2	*8041029	2
	SCREW CAP 5/16 - 18 x 1 - 1/2 LG.	*8041030	1	-	-	-	-
57	CAP - HUB	900468	4	900468	8	900468	8
58	WASHER - FLAT 1/2 “SAE”	*8172011	8	8172011	8	*8172011	8
59	PLATE BRACE HT. ADJ. KD / TKD	900756	1	900756	1	900756	1
60	CAP END 1” I.D.	800392	2	800392	2	800392	2
61	PIN - COTTER 3/32 X 3/4	*8197016	4	*8197016	4	*8197016	4
62	LABEL DANGER FLYING MATERIAL	810736	1	810736	1	810736	1
63	LABEL DO NOT FILL WHEN ENGINE IS HOT	400268	1	400268	1	400268	1
64	GUARD FOAM INSERT	900977	1	900977	1	900977	1
65	DOOR EXHAUST ASSY (incl. items 62, 66)	890148	1	890148	1	890148	1
66	SPRING DOOR EXHAUST	890142	1	890142	1	890142	1
67	SCREW CAP # 10-24	*8059135	2	*8059135	2	*8059135	2
68	NUT LOCK # 10-24	*8164005	2	*8164005	2	*8164005	2
69	WASHER # 10-24	*8171001	2	*8171001	2	*8171001	2
70	LABEL DANGER KEEP HANDS and FEET	400424	2	400424	2	400424	2

△ Denotes parts found in parts bag assembly. * Denotes standard hardware that may be purchased locally.

17 MAINTENANCE

Use only a qualified mechanic for any adjustments, disassembly or any kind of repair .

WARNING: TO AVOID PERSONAL INJURY, ALWAYS TURN MACHINE OFF, MAKE SURE ALL MOVING PARTS COME TO A COMPLETE STOP.

DISCONNECT SPARK PLUG WIRE BEFORE SERVICING UNIT.

ENGINE: See engine manufacturer operator's instructions.

DEBRIS BAG: See page 5.

RECONNECT SPARK PLUG WIRE, GUARDS, BAG, CAPS AND / OR HOSE BEFORE STARTING ENGINE.

17.1 IMPELLER REMOVAL

1.Wait for engine to cool and disconnect spark plug.
2.Drain fuel and oil from the engine.
3.Remove bag, quick release, and upper handle. Do not kink, stretch, or break control cables, control housings, or end fittings while removing handles.
4.Invert and support machine with engine not touching ground to prevent damage to recoil starter.

IMPELLER REMOVAL continued

5.Disassemble housing by removing six (6) lock nuts and washers from nozzle frame, (2 are inside of nozzle opening).
6.Remove impeller bolt and lock washer.
7.Lift impeller upward. If impeller slides freely, proceed to (step 10).
8 . Place two crowbars between impeller and housing on opposite sides. Pry impeller away from engine until it loosens. *Using a penetrating oil can help loosen a stuck impeller.*

9.If the impeller does not loosen, obtain a 1" (25.4mm) longer bolt of the same diameter and thread type as the impeller bolt. Thread longer bolt by hand into the crankshaft until bolt bottoms. Using a suitable gear or wheel puller against the bolt head and the impeller back-plate (near the blades), remove impeller from shaft.
10. Remove engine mounting screws, bolts, and nuts as required.
11. When impeller is free of the engine shaft, lift impeller and housing assembly off engine. Align impeller with opening, and diagonally lift impeller out of housing.
12. Using a new impeller bolt and lockwasher, reinstall new impeller in reverse order.
13. Tighten impeller bolt. Torque impeller bolt to 50 Ft. Lbs.(68 N.m) (see item 51 on page 7).
14. Reinstall engine onto housing in reverse order of removal.
15. Invert machine back onto all 4 wheels.
16. Reinstall spark plug wire.

17.2 *Maintenance Schedule* Follow these hourly maintenance intervals.

Maintenance Operation	Every Use	Every 5 hrs or (Daily)
Engine (See Engine Manual)		
Check for excessive vibration		●
Clean Debris Bag	●	
Check bag strap tightness	●	
Inspect for loose parts		●
Inspect for worn or damaged parts		●

20 TROUBLESHOOTING *Before Requesting Service Review These Suggestions*

Problem	Possible Cause	Solution
Will not vacuum or has poor vacuum performance.	Dirty debris bag. Nozzle height set too high or too low. Hose kit cap missing. Clogged nozzle or exhaust. Excessive quantity of debris.	Clean debris bag. Shake bag clean or wash. Adjust nozzle height. Check for hose kit cap. Unclog nozzle or exhaust (see page 5). Allow air to feed with debris.
Abnormal vibration.	Loose or out of balance impeller or loose engine.	Check impeller and replace if required. Check Engine.
Engine will not start.	Stop switch off (Honda only). Throttle in off position. Engine not in full choke position (Honda only). Out of gasoline. Bad or old gasoline. Spark Plug wire disconnected. Dirty air cleaner.	Check stop switches, throttle, choke position and gasoline. Connect spark plug wire. Clean or replace air cleaner. Or contact a qualified service person.
Engine is locked, will not pull over.	Debris locked in impeller. Engine problem.	See page 5, Contact an engine servicing dealer for engine problems.
Nozzle scrapes ground in lowest height setting.	Nozzle height out of adjustment.	Adjust nozzle height. (See Nozzle height fine adjustment for hard surface use on page 5).

22.1 Engine Service and Warranty

Contact your nearest engine manufacturer's authorized servicing dealer.

21 *Serial Plate*

Record your machine model, serial number and date-of-purchase and where purchased

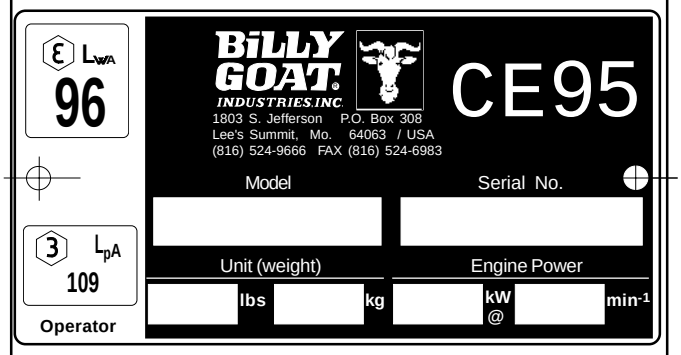

Purchase Date _____ ***Purchased from*** _____

22 *WARRANTY PROCEDURE*

Please fill in the WARRANTY CARD and send the upper part to Billy Goat. The WARRANTY terms are stated on the lower part which remains with the user. Whenever a Billy Goat Machine is faulty due to a defect in material and / or workmanship, the owner should make a warranty claim as follows:

The Machine should be taken to the dealer from whom it was purchased or to an authorized Billy Goat dealer.

The owner should present the remaining half of the Warranty Registration Card, or, if this is not available, the invoice or receipt.

The Warranty Claim will be filled in by the authorized Billy Goat Dealer, who will send it with the faulty part to Billy Goat headquarters.

The Quality / Service department at Billy Goat headquarters will study the claim and parts and will notify their conclusions.

The decision by the Quality / Service department at Billy Goat headquarters to approve or reject a Warranty claim is final and binding.

Note: To process a Warranty Claim, it is necessary to quote the Model & Serial number who are printed on the Billy Goat Serial Plate.

BILLY GOAT INDUSTRIES INC.
P.O. BOX 308 (1803 S JEFFERSON LEE'S SUMMIT, MO. 64063 / USA
PHONE: 816-524-9666 FAX: 816-524-6983