SELF-DIAGNOSTIC FUNCTION

SERVICE MANUAL

BA-4 CHASSIS

MODEL	COMMANDER	DEST.	CHASSIS NO.
KV-27S40	RM-Y165	US	SCC-S01H-A
KV-27S40	RM-Y165	CND	SCC-S03E-A
KV-27S45	RM-Y167	US	SCC-S01J-A
KV-27S45	RM-Y167	CND	SCC-S03F-A
KV-27S65	RM-Y167	US	SCC-S01K-A
KV-27S65	RM-Y167	CND	SCC-S03G-A
KV-29SL40	RM-Y165	E	SCC-S04X-A
KV-29SL40A	RM-Y165	E	SCC-S04S-A
KV-29SL40C	RM-Y165	E	SCC-S04U-A
KV-29SL45	RM-Y167	E	SCC-S04Y-A
KV-29SL65	RM-Y167	E	SCC-S06F-A
KV-29SL65C	RM-Y167	E	SCC-S04V-A
KV-29XL40M	RM-Y165	MX	SCC-S02D-A
KV-29XL40P	RM-Y165	E	SCC-S04R-A
KV-29XT11A	RM-Y165	E	SCC-S04T-A

KV-27S45

RM-Y167

TRINITRON® COLOR TV

SONY®

MICROFILM

SPECIFICATIONS

	KV-27S40 KV-29XL40M KV-29XL40P KV-29SL40	KV-27S45 KV-27S65 KV-29SL65	KV-29SL40A KV-29SL40C KV-29XT11A	KV-29SL45	KV-29SL65C
Power Requirements	120V,60Hz	120V,60Hz	220V,50/60Hz	120V,60Hz	220V,50/60Hz
Number of inputs/outputs					
Video [1]	1	2	1	2	2
S Video [2]	-	1	-	1	1
Audio [3]	1	2	1	2	2
Audio Out [4]	1	1	1	1	1
Speaker Output (W)	5W x 2	5W x 2	5W x 2	10W x 2	10W x 2
Power Consumption(W)					
In Use (Max)	140W	140W	140W	140W	140W
In Standby	2W	2W	3W	2W	3W
Dimensions (W/H/D)					
(mm)	660.4 x 598 x 505.5mm	660.4 x 598 x 505.5mm	660.4 x 598 x 505.5mm	660.4 x 598 x 505.5mm	660.4 x 598 x 505.5mm
(in.)	26 x 23 1/2 x 20 in	26 x 23 1/2 x20 in	26 x 23 1/2 x 20 in	26 x 23 1/2 x 20 in	26 x 23 1/2 x 20 in
Mass (kg)	38 kg	38 kg	38 kg	38 kg	38 kg
(lbs)	84 lbs	84 lbs	84 lbs	84 lbs	84 lbs

[1] 1 Vp-p 75 ohms unbalanced, sync negative
[2] Y: 1 Vp-p 75 ohms unbalanced, sync negative
C: 0.286 Vp-p (Burst signal), 75 ohms
[3] 500 mVrms (100% modulation), Impedance: 47 kilohms
[4] More than 408 mVrms at the maximum volume setting (variable)

Television system
American TV standard
PAL-M, PAL-L, NTSC (KV-29SL40A,29XT11A only)

Channel coverage
VHF:2-13/UHF:14-69/CATV:1-125

Visible screen size
27-inch picture measured
29-inch picture measured

Actual screen size
27-inch picture measured
29-inch picture measured

Antenna
75 ohm external terminal for VHF/UHF

Supplied Accessories
Remote commander (w/2 size AA (R6) batteries)
RM-Y165: (KV-27S40,29SL40/A/C,29XL40M,29XL40P, 29XT11A)
RM-Y167: (KV-27S45, 27S65, 29SL45, 29SL65, 29SL65C)

Optional Accessory
Connecting Cables:
VMC-810S/820S, MC-720M, YC-15V/30V, RK-74A
TV Stand SU-27A3
U/V Mixer EAC-66

(●)® SRS (SOUND RETRIEVAL SYSTEM)

The (●) SRS (SOUND RETRIEVAL SYSTEM) is manufactured by Sony Corporation under license from SRS Labs, Inc. It is covered by U.S. Patent No. 4,748,669. Other U.S. and foreign patents pending.

The word 'SRS' and the SRS symbol (●) are registered trademarks of SRS Labs, Inc.

BBE and BBE symbol are trademarks of BBE Sound,Inc. and are licensed by BBE Sound, Inc. under USP 4638258.4482866,

Design and specifications are subject to change without notice.

TABLE OF CONTENTS

WARNINGS AND CAUTIONS

CAUTION!

SHORT CIRCUIT THE ANODE OF THE PICTURE TUBE AND THE ANODE CAP TO THE METAL CHASSIS, CRT SHIELD, OR CARBON PAINTED ON THE CRT, AFTER REMOVING THE ANODE.

WARNING!!

AN ISOLATION TRANSFORMER SHOULD BE USED DURING ANY SERVICE TO AVOID POSSIBLE SHOCK HAZARD, BECAUSE OF LIVE CHASSIS.THE CHASSIS OF THIS RECEIVER IS DIRECTLY CONNECTED TO THE AC POWER LINE.

SAFETY-RELATED COMPONENT WARNING!!

COMPONENTS IDENTIFIED BY SHADING AND MARK ⚠ ON THE SCHEMATIC DIAGRAMS, EXPLODED VIEWS AND IN THE PARTS LIST ARE CRITICAL FOR SAFE OPERATION. REPLACE THESE COMPONENTS WITH SONY PARTS WHOSE PART NUMBERS APPEAR AS SHOWN IN THIS MANUAL OR IN SUPPLEMENTS PUBLISHED BY SONY. CIRCUIT ADJUSTMENTS THAT ARE CRITICAL FOR SAFE OPERATION ARE IDENTIFIED IN THIS MANUAL. FOLLOW THESE PROCEDURES WHENEVER CRITICAL COMPONENTS ARE REPLACED OR IMPROPER OPERATION IS SUSPECTED.

ATTENTION

APRES AVOIR DECONNECTE LE CAP DE L'ANODE, COURT-CIRCUITER L'ANODE DU TUBE CATHODIQUE ET CELUI DE L'ANODE DU CAP AU CHASSIS METALLIQUE DE L'APPAREIL, OU AU COUCHE DE CARBONE PEINTE SUR LE TUBE CATHODIQUE OU AU BLINDAGE DU TUBE CATHODIQUE.

ATTENTION!!

AFIN D'EVITER TOUT RESQUE D'ELECTROCUTION PROVENANT D'UN CHÁSSIS SOUS TENSION, UN TRANSFORMATEUR D'ISOLEMENT DOIT ETRE UTILISÉ LORS DE TOUT DÉPANNAGE. LE CHÁSSIS DE CE RÉCEPTEUR EST DIRECTEMENT RACCORDÉ À L'ALIMENTATION SECTEUR.

ATTENTION AUX COMPOSANTS RELATIFS A LA SECURITE!!

LES COMPOSANTS IDENTIFIES PAR UNE TRAME ET PAR UNE MARQUE ⚠ SUR LES SCHEMAS DE PRINCIPE, LES VUES EXPLOSEES ET LES LISTES DE PIECES SONT D'UNEIMPORTANCE CRITIQUE POUR LA SECURITE DU FONCTIONNEMENT. NE LES REMPLACER QUE PAR DES COMPOSANTS SONY DONT LE NUMERO DE PIECE EST INDIQUE DANS LE PRESENT MANUEL OU DANS DES SUPPLEMENTS PUBLIES PAR SONY. LES REGLAGES DE CIRCUIT DONT L'IMPORTANCE EST CRITIQUE POUR LA SECURITE DU FONCTIONNEMENT SONT IDENTIFIES DANS LE PRESENT MANUEL. SUIVRE CES PROCEDURES LORS DE CHAQUE REMPLACEMENT DE COMPOSANTS CRITIQUES, OU LORSQU'UN MAUVAIS FONTIONNEMENT SUSPECTE.

SELF-DIAGNOSTIC FUNCTION

The units in this manual contain a self-diagnostic function. If an error occurs, the STANDBY/TIMER lamp will automatically begin to flash. The number of times the lamp flashes translates to a probable source of the problem. A definition of the STANDBY/TIMER lamp flash indicators is listed in the instruction manual for the user's knowledge and reference. If an error symptom cannot be reproduced, the remote commander can be used to review the failure occurrence data stored in memory to reveal past problems and how often these problems occur.

1. DIAGNOSTIC TEST INDICATORS

When an error occurs, the STANDBY/TIMER lamp will flash a set number of times to indicate the possible cause of the problem. If there is more than one error, the lamp will identify the first of the problem areas.

Results for all of the following diagnostic items are displayed on screen. No error has occured if the the screen displays a "0" .

Diagnostic Item Description	No. of times STANDBY/TIMER lamp flashes	Self-diagnostic display/ Diagnostic result	Probable Cause Location	Detected Symptoms
* Power does not turn on	Does not light	————	* Power cord is not plugged in. * Fuse is burned out (F5050) (E Board)	* Power does not come on. * No power is suppled to the TV. * AC power supply is faulty.
* +B overcurrent (OCP)	2 times	2:0 or 2:1	* H.OUT (Q502) is shorted. (A board) * IC1751 and Q1751 is shorted. (C board)	* Power does not come on. * Load on power line is shorted.
* Vertical deflection stopped	4 times	4:0 or 4:1	* +13V is not supplied. (A board) * IC 541 is faulty (A board)	* Has entered standby state after horizontal raster. * Vertical deflection pulse is stopped. * Power line is shorted or power supply is stopped.
* White balance failure (not balanced)	5 times	5:0 or 5:1	* Video OUT (Q306 to 308) is faulty. (A board) * IC301 is faulty. (A board) * G2 is improperly adjusted. (Note 2)	* No raster is generated. * CRT cathode current detection reference pulse output is small.

Note 1: If a +B overcurrent is detected, stoppage of the vertical deflection is detected simultaneously.
The symptom that is diagnosed first by the microcontroller is displayed on the screen.
Note 2: Refer to Screen (G2) Adjustment in Section 3-4 of this manual.

2. DISPLAY OF STANDBY/TIMER LIGHT FLASH COUNT

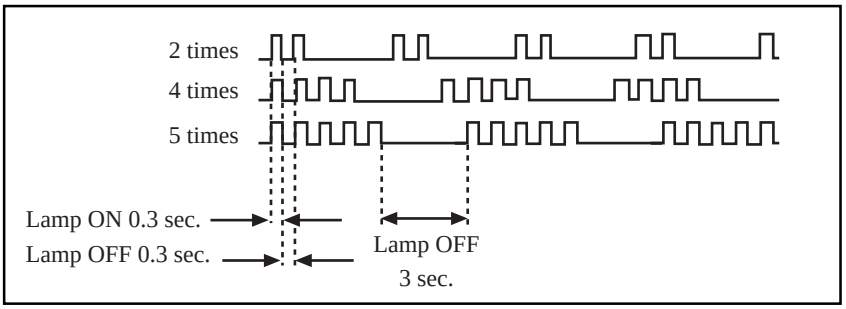

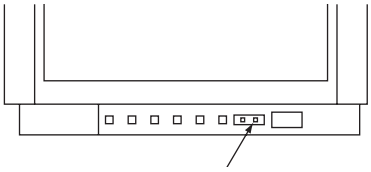

Diagnostic Item	Flash Count*
+B overcurrent	2 times
Vertical deflection stopped	4 times
White balance failure	5 times

* One flash count is not used for self-diagnostic.

3. STOPPING THE STANDBY/TIMER FLASH

Turn off the power switch on the TV main unit or unplug the power cord from the outlet to stop the STANDBY/TIMER lamp from flashing.

4. SELF-DIAGNOSTIC SCREEN DISPLAY

For errors with symptoms such as "power sometimes shuts off" or "screen sometimes goes out" that cannot be confirmed, it is possible to bring up past occurances of failure for confirmation on the screen:

[To Bring Up Screen Test]

In standby mode, press buttons on the remote commander sequentially in rapid succession as shown below:

Screen display ➡ channel 5 ➡ Sound volume − ➡ Power ON

⇧

Note that this differs from entering the service mode (sound volume +).

Self-Diagnostic screen display

```
SELF DIAGNOSTIC

2:              0  <-------------Numeral "0" means that no fault has been detected.
3:      N/A     0
4:              0
5:              1  <-------------Numeral "1" means a fault has been detected one time only.
101:    N/A     0
```

5. HANDLING OF SELF-DIAGNOSTIC SCREEN DISPLAY

Since the diagnostic results displayed on the screen are not automatically cleared, always check the self-diagnostic screen during repairs. When you have completed the repairs, clear the result display to "0".

Unless the result display is cleared to "0", the self-diagnostic function will not be able to detect subsequent faults after completion of the repairs.

[Clearing the result display]

To clear the result display to "0", press buttons on the remote commander sequentially as shown below when the diagnostic screen is being displayed.

Channel 8 ➡ ENTER

[Quitting Self-diagnostic screen]

To quit the entire self-diagnostic screen, turn off the power switch on the remote commander or the main unit.

6. SELF-DIAGNOSTIC CIRCUIT

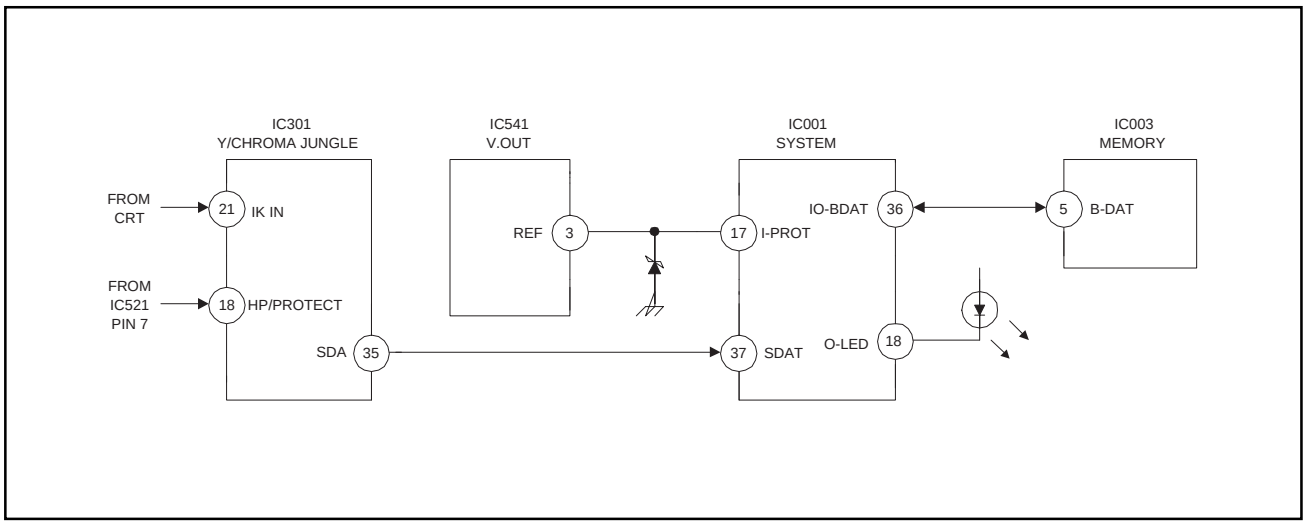

+B overcurrent (OCP)	Occurs when an overcurrent on the +B(115V) line is detected by pin 18 of IC301. If the voltage to pin 18 of IC301 is less than 1V when V.SYNC is more than seven verticals in a period, the unit will automatically turn off.
Vertical deflection stopped	Occurs when an absence of the vertical deflection pulse is detected by pin 17 of IC001. Power supply will shut down when waveform interval exceeds 2 seconds.
White balance failure	If the RGB levels* do not balance within 2 seconds after the power is turned on, this error will be detected by IC301. TV will stay on, but there will be no picture. *(Refers to the RGB levels of the AKB detection Ref pulse that detects IK.)

SAFETY CHECK-OUT

After correcting the original service problem, perform the following safety checks before releasing the set to the customer:

1. Check the area of your repair for unsoldered or poorly-soldered connections. Check the entire board surface for solder splashes and bridges.
2. Check the interboard wiring to ensure that no wires are "pinched" or contact high-wattage resistors.
3. Check that all control knobs, shields, covers, ground straps, and mounting hardware have been replaced. Be absolutely certain that you have replaced all the insulators.
4. Look for unauthorized replacement parts, particularly transistors, that were installed during a previous repair. Point them out to the customer and recommend their replacement.
5. Look for parts which, though functioning, show obvious signs of deterioration. Point them out to the customer and recommend their replacement.
6. Check the line cords for cracks and abrasion. Recommend the replacement of any such line cord to the customer.
7. Check the B+ and HV to see if they are specified values. Make sure your instruments are accurate; be suspicious of your HV meter if sets always have low HV.
8. Check the antenna terminals, metal trim, "metallized" knobs, screws, and all other exposed metal parts for AC Leakage. Check leakage as described below.

LEAKAGE TEST

The AC leakage from any exposed metal part to earth ground and from all exposed metal parts to any exposed metal part having a return to chassis, must not exceed 0.5 mA (500 microampere). Leakage current can be measured by any one of three methods.

1. A commercial leakage tester, such as the Simpson 229 or RCA WT-540A. Follow the manufacturers' instructions to use these instructions.
2. A battery-operated AC milliammeter. The Data Precision 245 digital multimeter is suitable for this job.
3. Measuring the voltage drop across a resistor by means of a VOM or battery-operated AC voltmeter. The "limit" indication is 0.75 V, so analog meters must have an accurate low voltage scale. The Simpson's 250 and Sanwa SH-63Trd are examples of passive VOMs that are suitable. Nearly all battery operated digital multimeters that have a 2V AC range are suitable. (See Fig. A)

HOW TO FIND A GOOD EARTH GROUND

A cold-water pipe is guaranteed earth ground; the cover-plate retaining screw on most AC outlet boxes is also at earth ground. If the retaining screw is to be used as your earth-ground, verify that it is at ground by measuring the resistance between it and a cold-water pipe with an ohmmeter. The reading should be zero ohms. If a cold-water pipe is not accessible, connect a 60-l00 watts trouble light (not a neon lamp) between the hot side of the receptacle and the retaining screw. Try both slots, if necessary, to locate the hot side of the line, the lamp should light at normal brilliance if the screw is at ground potential. (See Fig. B)

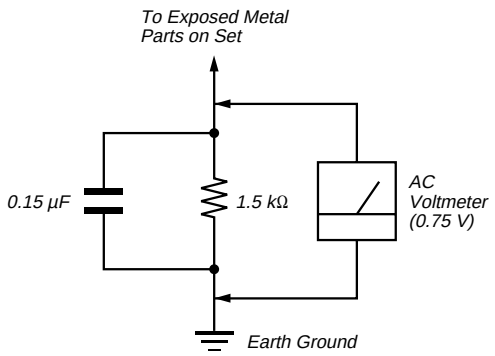

Fig. A. Using an AC voltmeter to check AC leakage.

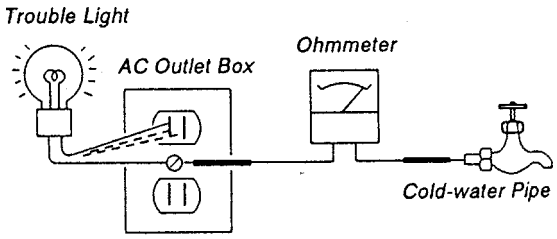

Fig B. Checking for earth ground.

SECTION 1
GENERAL

The instructions mentioned here are partial abstracts from the Operating Instruction Manual.
The page numbers shown reflect those of the Operating Instruction Manual.

Connecting and Installing the TV

Making Connections

Refer to the table below, it will direct you to the diagram suitable to the components you will be connecting.

If you will be connecting	See page
Cable or antenna only	5
Cable and antenna (KV-27S65, 27V65 only)	5
Cable box	6
Cable box and cable to view scrambled channels (KV-27S65, 27V65 only)	6
VCR and cable or antenna	7
VCR and cable box	7
Direct Broadcast Satellite Receiver (DBS)	8
VCR and Direct Broadcast Satellite Receiver (DBS)	9
Digital Versatile Disc receiver (DVD)	10
Audio system	10
Two VCRs for tape editing (KV-27V40, 27V45, 27V65 only)	11
Camcorder to view tapes	11

Cable or Antenna Connections

Connecting directly to cable or an antenna

The connection you choose will depend on the cable found in your home. Newer homes will be equipped with standard coaxial cable (see **A**); older homes will probably have 300-ohm twin lead cable (see **B**); still other homes may contain both (see **C**).

A

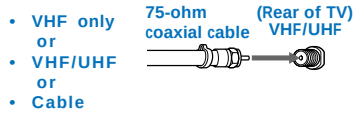

B

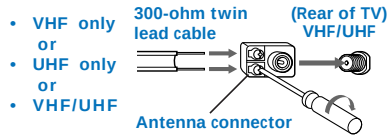

C

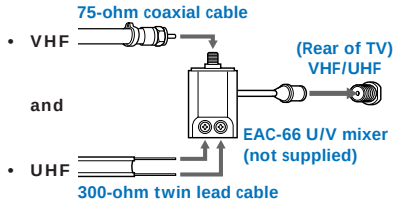

Cable and antenna

- KV-27S65, 27V65 only

If your cable provider does not feature local channels, you may find this set up convenient.

Select Cable or ANT mode by pressing ANT on the remote control. You will be able to alternate between the two input sources.

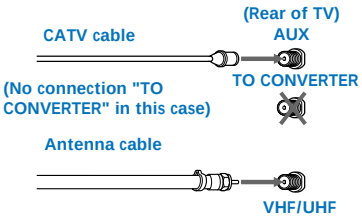

Note

- In order to receive channels with an antenna, you will need to turn your CABLE to OFF (see page 23) and perform the AUTO PROGRAM function.

Connecting and Installing the TV (continued)

Cable Box Connections

Some pay cable TV systems use scrambled or encoded signals that require a cable box* to view all channels.

Cable box

1. Connect the coaxial connector from your cable or antenna to the IN on your cable box.
2. Using a coaxial cable, connect OUT on your cable box to VHF/UHF on your TV.

If you will be controlling all channel selection through your cable box, you should consider using the CHANNEL FIX feature discussed on page 23.

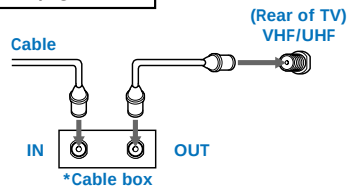

Cable box and cable

- **KV-27S65, 27V65 only**

For this set up, you can switch between scrambled channels (through your cable box), and normal (CATV) channels by pressing ANT on your remote control.

If you are connecting a cable box through the AUX input and would like to switch between the AUX and normal (CATV) input you should consider using the CHANNEL FIX feature discussed on page 23.

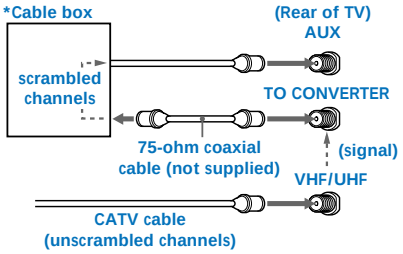

Notes

- Your Sony remote control can be programmed to operate your cable box. (see page 28)
- When using PIP, you cannot view the window picture with the AUX input.

VCR Connections

Connecting an antenna/cable TV system with a VCR

1. Attach the coaxial connector from your cable or antenna to IN on your VCR.
2. Using A/V connectors, connect AUDIO and VIDEO OUT on your VCR to AUDIO and VIDEO IN on your TV (Yellow-VIDEO, White-AUDIO Left, Red-AUDIO Right).*
3. Using a coaxial connector, connect OUT on your VCR to VHF/UHF on your TV.

* If you are connecting a monaural VCR, connect only the single white audio output to the left input on your TV.

Disconnect all power sources before making any connections.

VCR must be connected and turned on to operate PIP (KV-27S45, 27V45 only).

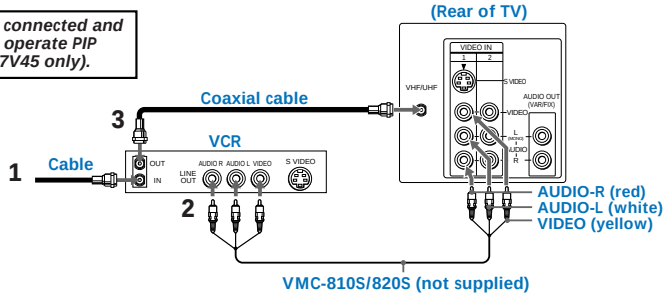

Connecting a VCR and TV with a cable box

You will need a splitter (not supplied) for the following connection.

1. Connect the single (input) jack of the splitter to your incoming cable connection. Connect the other two (output) jacks (using coaxial cable) to IN on your cable box and VHF/UHF on your TV.
2. Using a coaxial connector, connect OUT on your cable box to IN on your VCR.
3. Using A/V connectors, connect AUDIO and VIDEO OUT on your VCR to AUDIO and VIDEO IN on your TV (Yellow-VIDEO, White-AUDIO Left, Red-AUDIO Right).

For optimum picture quality, use S VIDEO instead of the yellow A/V cable. S Video does not provide sound, your audio connectors must still be connected.

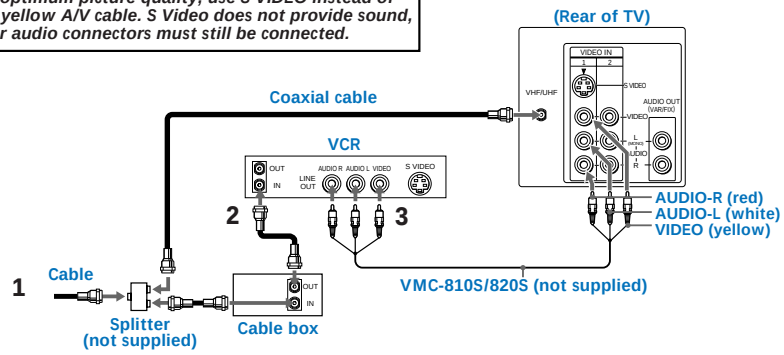

Connecting and Installing the TV (continued)

Disconnect all power sources before making any connections.

DBS Connections

Connecting a DBS (Direct Broadcast Satellite) receiver

1. Connect the cable from your satellite antenna to your DBS receiver.
2. Attach the coaxial connector from your cable or antenna to VHF/UHF on your TV.
3. Using A/V connectors, connect AUDIO and VIDEO OUT on your DBS receiver to AUDIO and VIDEO IN on your TV.

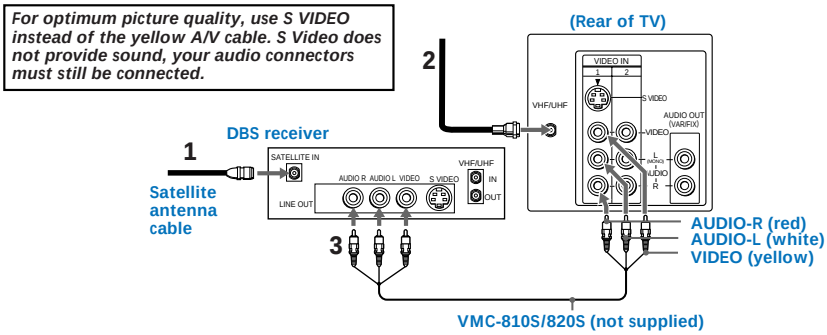

Disconnect all power sources before making any connections.

DBS Connections (continued)

Connecting a DBS (Direct Broadcast Satellite) receiver and a VCR

1. Connect the cable from your satellite antenna to your DBS receiver.
2. Attach the coaxial connector from your cable or antenna to VHF/UHF IN on your VCR.
3. Using a coaxial connector, connect VHF/UHF OUT on your VCR to VHF/UHF on your TV.
4. Using A/V connectors, connect AUDIO and VIDEO OUT on your DBS receiver to AUDIO and VIDEO IN on your VCR.
5. Using A/V connectors, connect AUDIO and VIDEO OUT on your VCR to AUDIO and VIDEO IN on your TV.

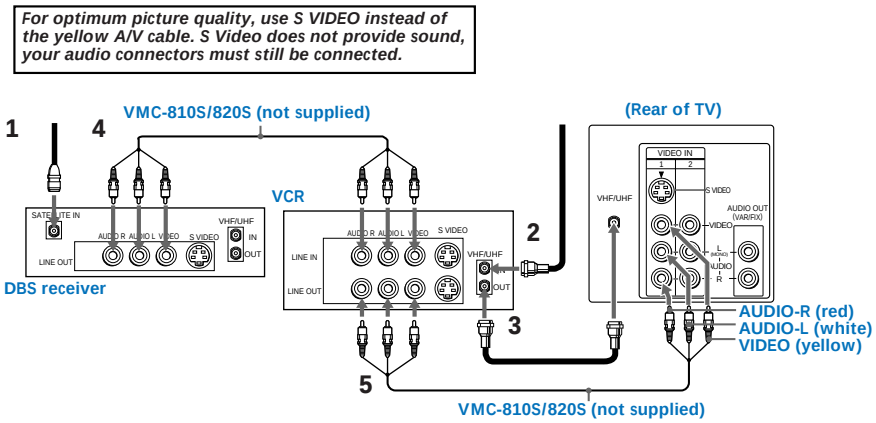

Note

- To view from the DBS or VCR, select the video input to which your DBS receiver or VCR is connected by pressing TV/VIDEO on the remote control.

Connecting and Installing the TV (continued)

Disconnect all power sources before making any connections.

Additional Connections

The following connections are for accessories that will enhance your viewing options.

Connecting a DVD Player

1 Using A/V connectors, connect LINE OUT on your DVD to VIDEO IN on your TV (Red-AUDIO Right, White-AUDIO Left, Yellow-VIDEO).

Note

- For the best picture quality, connect the DVD player directly to the TV.

For optimum picture quality, use S VIDEO instead of the yellow A/V cable. S Video does not provide sound, your audio connectors must still be connected.

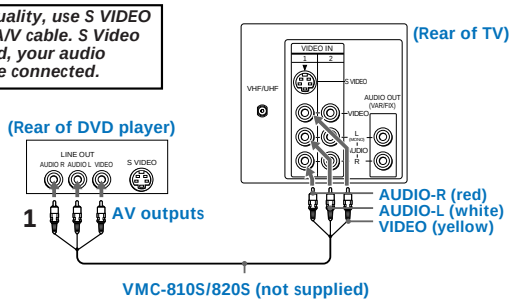

Connecting an audio system

For enhanced sound, connect your audio system to your TV.

1 Using AUDIO connectors, connect AUDIO OUT on your TV to one of the unused line inputs (e.g. TV, AUX, TAPE 2) on your stereo (White-AUDIO Left, Red-AUDIO Right).

2 Set your stereo to the chosen line input (e.g. TV, AUX, TAPE 2). Refer to page 20 of this manual for additional audio setup instructions.

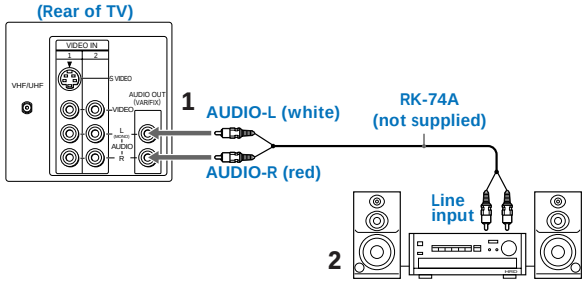

Disconnect all power sources before making any connections.

Connecting two VCRs for tape editing using MONITOR OUT

- **KV-27V40, 27V45, 27V65 only**

MONITOR OUT gives you the ability to use a second VCR to record a program being played by the primary VCR or to perform tape editing and dubbing.

1 Connect the VCR intended for playback using the setup instructions on page 7 of this manual.

2 Using A/V connectors, connect AUDIO and VIDEO IN on your VCR intended for recording to MONITOR AUDIO and VIDEO OUT on your TV.

You cannot change video inputs while editing using MONITOR OUT.

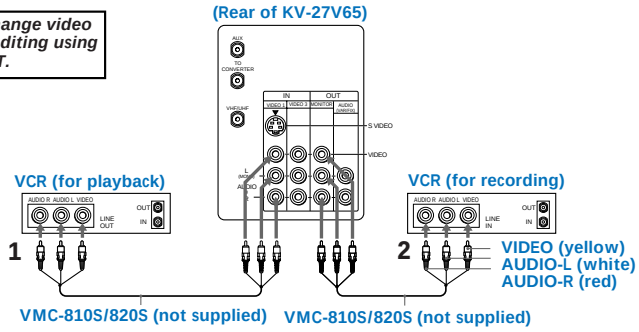

Connecting a camcorder

This connection is convenient for viewing a picture directly from your camcorder.

Using A/V connectors, connect AUDIO and VIDEO OUT on your camcorder to AUDIO and VIDEO IN on your TV (Yellow-VIDEO, White-AUDIO Left, Red-AUDIO Right).

Connection can also be made directly to your A/V input located on the rear of your TV.

Note

- If you are connecting a monaural camcorder, connect only the single white audio output to the left input on your TV.

If you have an S Video equipped camcorder, you can use an S Video connection for optimum picture quality.

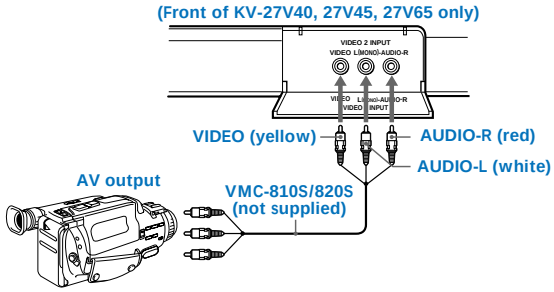

Basic Set up

Inserting batteries

Insert two size AA (R6) batteries (supplied) by matching the + and – on the batteries to the diagram inside the battery compartment.

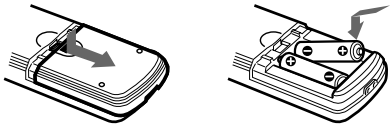

Notes

- Remove the batteries to avoid damage from possible battery leakage whenever you anticipate that the remote control will not be used for an extended period.
- Handle the remote control with care. Avoid dropping it, getting it wet, or placing it in direct sunlight, near a heater, or where the humidity is high.
- Your remote control can be programmed to operate most video equipment. (see page 26)

Using the remote control, Move & Select buttons

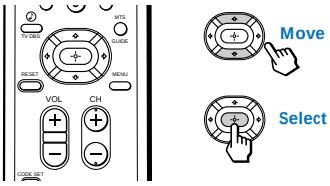

The supplied remote control has "arrow" buttons (↑, ↓, ←, →) which allow for movement of the on-screen selector in four directions. Pressing on the outer buttons will cause the selector to *move* in the corresponding direction. Pressing the center button (⊕) will select the item.

Adjustments bars

When menu items present an adjustment bar (▮▮▮▮▮▮▮▮▮▮ or ▮▮▮▮▮▮▮▮▮▮), use the arrow buttons to change the setting.

On-Screen Help/Instructions

Several menu windows will provide prompts and instructions to assist you in navigating through the different functions. *When presented, use these to supplement the instructions in this manual.*

Note

- To reset your TV to factory settings, turn the TV on. Then, while pressing the RESET button, press the POWER key on your TV. The TV will turn itself off, then back on. (except KV-20V80).

Using your New TV

Setting up the TV automatically

The Easy Setup Guide allows you to set the on-screen language and set all receivable channels. The Easy Setup Guide screen appears every time you turn on the TV until you perform AUTO PROGRAM.

The Easy Setup Guide feature does not apply for installations that use a cable box for all channel selection.

To set up the TV manually, refer to "Using the SET UP menu" on page 23.

Tips

- Perform this function during the day, with the antenna and/or cable properly connected, to ensure that all available channels will be broadcasting and receivable.
- After using the Easy Setup Guide you will still have the option of adjusting any of the system settings, like skipping channels, through the SET UP menu (page 24).
- The TV must be set to the TV input to execute AUTO PROGRAM. Press ANT until a channel number appears.
- If your cable or antenna is connected to AUX, then press ANT until AUX appears next to the channel number. (KV-27S65, 27V65 only)

Using the buttons on the front of the TV:

For KV-27V65, the control buttons are located on the top of the TV.

1 Press POWER to turn on the TV.
The Easy Setup Guide screen appears.

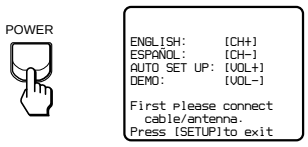

2 (except Canadian models)
Press CH + to select English screens or CH – to select Spanish screens.

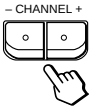

3 Press VOL + to continue or VOL – for a DEMO of functions and menus.

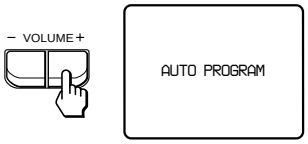

AUTO PROGRAM appears and the TV starts scanning and presetting channels automatically. When all the receivable channels are stored, the lowest numbered channel is displayed. If the TV receives cable TV channels, CABLE is set ON automatically.

To perform AUTO SET UP again

- Press SET UP on the TV.
- Press CH + or CH – to select a language.
- Press VOL + to restore factory settings (CONTINUE TO AUTO PROGRAM? will appear on the screen). Press CH + to continue or CH – to exit.
- Press SET UP to exit.

Note

- When you perform AUTO PROGRAM, your CHANNEL FIX, CHANNEL BLOCK and ON/OFF TIMER settings will be erased.

Using your New TV (continued)

Watching the TV

All of the TV features can be accessed via the remote control. The following chart will explain the function of the buttons found on your remote control.

REFER TO THE ILLUSTRATION OF THE REMOTE CONTROL ON THE INSIDE FRONT COVER OF THIS MANUAL AS YOU REVIEW THIS CHART

Using the White Labeled Buttons for TV Operations.	
FUNCTION VTR/DVD DBS/CABLE TV	Activate the remote control for use with the following components: TV, DBS/CABLE, VTR/DVD. Press when you want to control connected components with your remote control. (see pages 26-28 for instructions on programming your remote control)
POWER TV	Turns the TV on and off. If VIDEO appears on the screen, press TV/VIDEO or ANT until a channel number appears.
0 - 9	Use for direct channel selection. Press 0-9 to select a channel, the channel will change after 2 seconds, or you can press ENTER for immediate selection.
CH + –	Press to scan through the channels. *Keeping the CH + or – pressed allows you to rapidly scan to the desired channel.*
JUMP	Press to alternate or *jump* back and forth between two channels. You can jump between the last two channels selected with the 0-9 keys.
MUTING	Press to mute the sound (MUTING will appear on the screen). Press again or press VOL + to restore sound.

Using the White Labeled Buttons for TV Operations.	
FREEZE	Press to freeze the window picture while in PIP mode. If you are not in PIP mode, pressing FREEZE will cause the main picture to freeze into a window picture. *Great for copying down phone numbers, addresses, recipes, etc.*
SLEEP	Press repeatedly until the TV displays the approximate time in minutes (30, 60, or 90) that you want the TV to remain on before shutting off automatically. Cancel by pressing until SLEEP OFF appears.
DISPLAY	Press repeatedly to step through available displays: **Status** Channel number, current time, channel caption (if set) and Multi-Channel TV Sound (MTS) are displayed. *The MTS mode indication disappears after three seconds.* **CAPTION VISION** CAPTION VISION will be displayed on the screen if the broadcaster offers this service. (see right) To cancel the display, press DISPLAY repeatedly until DISPLAY OFF appears. *DISPLAY OFF disappears after three seconds.*
TV/VIDEO	Press repeatedly to step through available video inputs: **TV** and **VIDEO 1** (KV-27S40 only) **TV, VIDEO 1** and **VIDEO 2** (KV-20V80, 27S45, 27S65, 27V40 only) **TV, VIDEO 1, VIDEO 2** and **VIDEO 3** (KV-27V45, 27V65 only)
ANT *(AUX input)*	Press to change the VHF/UHF input to the AUX input (KV-27S65, 27V65 only). *For detailed connection information, see "Cable and antenna" or "Cable box and cable" on pages 5-6.*
TV/VTR +	Press when you are finished using a VCR and you want to switch to the TV input. Your VCR power will remain on.
MTS GUIDE	Press this button to cycle through the Multi-channel TV Sound (MTS) options. (see page 21). GUIDE is a feature of DBS, refer to your DBS operation instructions.

CAPTION VISION
(Closed Caption)

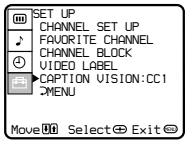

Some programs are broadcast with CAPTION VISION.

CC1, 2, 3 or 4
Shows you a printed version of the dialog or sound effects of a program. (The mode should be set to CC1 for most programs)

TEXT1, 2, 3 or 4
Shows you network/station information presented using either half or the whole screen. It is not usually related to the program.

XDS (Extended Data Service)
Shows a network name, program name, program length, and time of the show if the broadcaster offers this service.

Note

- Poor reception of TV programs can cause errors in CAPTION VISION and XDS. Captions may appear with a white box or other errors instead of intended text.

Using your New TV (continued)

Watching two programs at one time - PIP

The Picture-in-Picture (PIP) feature allows you to view two channels simultaneously, one in the full size "main" picture and one in a smaller "window" picture. This means that two separate tuners must be available to provide the two signals.

Certain models (KV-27S45, 27V45 only) are equipped with a single tuner. This simply means that a VCR must be connected and turned on for PIP to operate.

Tip

To ensure a correct single tuner PIP connection (KV-27S45, 27V45 only), make sure the following list is complete before using PIP:

- A cable or antenna is connected to the VCR
- The VCR is connected to your TV
- The VCR is turned on

(for detailed connection information, see pages 5-7)

Note

- You must press TV (FUNCTION) before you can control PIP with the yellow labeled buttons.

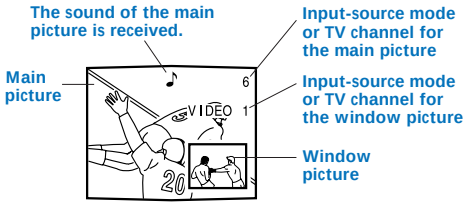

REFER TO THE ILLUSTRATION OF THE REMOTE CONTROL ON THE INSIDE FRONT COVER OF THIS MANUAL AS YOU REVIEW THIS CHART

Use the Yellow Labeled Buttons for PIP Operations.	
PIP	Press once to display the window picture (1/9 size). Press again to reduce the size of the window picture (1/16 size). Press a third time to remove the window picture.
TV/VIDEO	Press repeatedly to step through available video inputs: **TV, VIDEO 1, VIDEO 2, and VIDEO 3** (KV-27S45, 27S65, 27V45, 27V65 only) *If you have a single tuner, your PIP input source is the VCR.*
AUDIO	Press to alternate sound between the main picture and the window picture. A ♪ will appear for a few seconds to indicate which picture is receiving sound.

Use the Yellow Labeled Buttons for PIP Operations.	
TV/VTR + CH –	Press to change the TV channel in the window picture. (KV-27S65, 27V65 only) For models KV-27S45, 27V45, you must press VTR/DVD (FUNCTION), then use the main CH +/- buttons to change channels. (see right)
POSITION	Press to move the location of the window picture (counterclockwise) around the main picture.
FREEZE	Press to freeze the window picture. Great for copying down phone numbers, addresses, recipes, etc. *Press FREEZE again to restore the previous screen(s).*
SWAP	Press to switch the audio and video of the main picture and the window picture. Each time you press SWAP, the picture and sound of the two will be *swapped.* *Any channels being received through the AUX jack cannot be displayed as a window picture. (KV-27S65, 27V65 only)*

Changing channels with a single tuner PIP

- **KV-27S45, 27V45 only**

1. Press TV/VIDEO until you reach the TV input.
2. Press PIP (the window picture appears).

To change the window picture:

1. Press VTR/DVD (FUNCTION).
2. Press the main CH +/– buttons to change channels.

To change the main picture:

1. Press TV (FUNCTION).
2. Press the main CH +/– buttons to change channels.

Note

- If you have the same program in both the window and the main picture and cannot change the channel in the window; press TV/VIDEO until you reach the TV input in the main picture.

Using your Menus

Learning menu selection

Use the MENU button to access a menu and use the select buttons (↑ or ↓) to alter settings. Use the following example, in which we activate the CABLE, to learn how to modify settings.

1 Press the MENU button.

The main menu appears.

2 Press ↑ or ↓ to highlight the desired menu (in this case SET UP) and press ⊕ to select it.

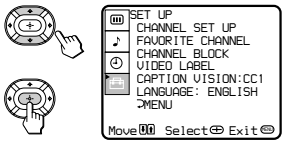

3 Press ↑ or ↓ to move to the desired option.

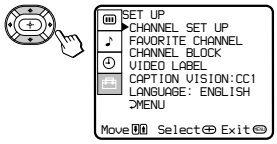

4 Press ⊕.

Options for your selection will be displayed.

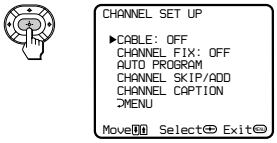

5 Press ↑ or ↓ to make your selection and press ⊕.

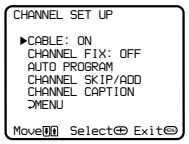

When you are finished making changes to the selected menu, choose MENU to return to the main menu.

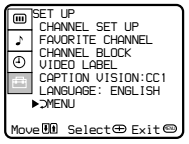

Notes

- Pressing MENU on the remote control will allow you to exit from the menus at any time.
- If any menu items are "blacked out", press the ANT button on your remote control until a channel number appears.

Using the VIDEO menu

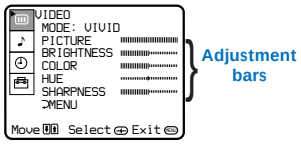

For detailed information on using the remote to modify menu settings, refer to "Learning menu selection" on page 18.

To select the VIDEO menu:

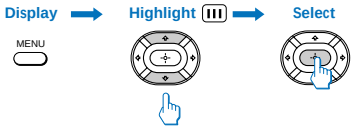

To restore the factory VIDEO settings

Press RESET while the VIDEO menu is displayed.

MODE *Customized picture viewing*	(except KV-20V80) **VIVID:** Select to receive a vivid, bright picture. **STANDARD:** Select to receive a standard picture. **MOVIE:** Select to receive a softened picture.
PICTURE *Picture Adjustment*	Adjust left to decrease picture contrast and soften the color. Adjust right to increase picture contrast and create more vivid color.
BRIGHTNESS *Picture Adjustment*	Adjust left to darken the picture. Adjust right to brighten the picture.
COLOR *Picture Adjustment*	Adjust left to decrease color intensity. Adjust right to increase color intensity.
HUE *Picture Adjustment*	Adjust left to decrease the green tones. Adjust right to increase the green tones.
SHARPNESS *Picture Adjustment*	Adjust left to soften the picture. Adjust right to sharpen the picture.

Using your Menus (continued)

♪ Using the AUDIO menu

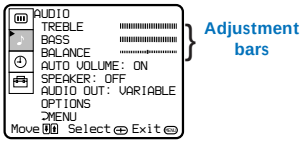

For detailed information on using the remote to modify menu settings, refer to "Learning menu selection" on page 18.

To select the AUDIO ♪ menu:

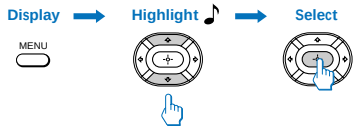

To restore the factory AUDIO settings

Press RESET while the AUDIO menu is displayed.

Tip

Press ♪ for direct selection of an AUDIO setting.

TREBLE	Adjust left or right to decrease or increase higher pitched sound
BASS	Adjust left or right to decrease or increase low pitched sounds.
BALANCE	Adjust left or right to emphasize speaker volume.
AUTO VOLUME *Stabilizes volume*	(KV-27V40, 27V45, 27V65 only). **ON:** Select to stabilize the volume when changing channels. **OFF:** Select to turn AUTO VOLUME off.
SPEAKER *Custom selection of audio output source*	**ON:** Select to listen to the sound from the TV speakers and a separate stereo system. **OFF:** Select to turn off the TV speakers and listen to the TV's sound only through external audio system speakers.
AUDIO OUT *Use to control the TV's volume through a stereo*	AUDIO OUT can only be set when speakers are set to OFF. **VARIABLE:** Sound output varies according to the TV settings. *Useful when you want to use your remote control to control the output of a separate audio system.* **FIXED:** Sound output is held at a fixed level through your stereo.

OPTIONS *Enhanced audio options*	With the OPTIONS menu open: **1** Press ⊕ to access the feature you want to change. **2** Press ↑ or ↓ to cycle through the options. **MTS:** Press ↑ or ↓ to select one of the following options: **STEREO**: Select for stereo reception when viewing a broadcast in stereo. **SAP**: Select to listen to bilingual broadcast. (Non-SAP programs will be muted when this feature is selected.) **MONO**: Select for mono reception (use to reduce noise during stereo broadcasts.) ***Quick MTS access:*** *Press MTS on your remote control to cycle through the MTS options.* **EFFECT:** Press ↑ or ↓ to select one of these customized effects based on the program you are viewing: **SRS**: Produces a dynamic three dimensional sound for stereo audio signals. (KV-27V40, 27V45, 27V65 only) **SURROUND**: Simulates theater quality sound (only for stereo programs). (KV-20V80, 27S40, 27S45, 27S65 only) **SIMULATED**: Adds a surround-like effect to mono programs. (KV-27V40, 27V45, 27V65 only)

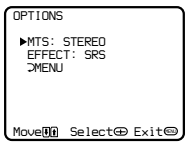

Using your Menus (continued)

Using the TIMER menu

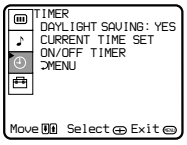

For detailed information on using the remote to modify menu settings, refer to "Learning menu selection" on page 18.

To select the TIMER menu:

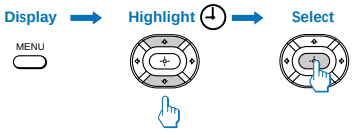

To cancel the ON/OFF TIMER function

Press RESET while the TIMER menu is displayed.

Tip

Set daylight saving time before setting the clock. Any loss of power will cause these settings to be erased.

DAYLIGHT SAVING *Automatically adjusts the time.*	**Spring:** Select YES to compensate for Daylight Saving Time. *The current time automatically moves one hour ahead.* **Fall:** Select NO at the end of Daylight Saving Time. *The current time moves back one hour.*
CURRENT TIME SET *Necessary for the TIMER.*	CURRENT TIME SET menu will appear. **1** Press ⊕. **2** Press ↑ or ↓ until the current day is displayed. Press ⊕ to select. **3** Press ↑ or ↓ until the current hour and AM/PM is displayed. Press ⊕ to select. **4** Press ↑ or ↓ until the current minute is displayed, press ⊕. The clock is set. Press MENU to exit. 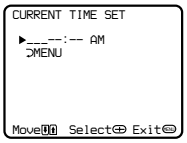
ON/OFF TIMER *Wake up or scheduled viewing.*	ON/OFF TIMER menu will appear. **1** Press ⊕. **2** Press ↑ or ↓ until the desired day or range of days is displayed. Press ⊕ to select. **3** Indicate the time that you want the TV to turn on by pressing ↑ or ↓ and then ⊕. **4** Set the time duration (maximum of 6 hours) by pressing ↑ or ↓ and then ⊕. **5** Press ↑ or ↓ until you reach the desired channel. Press ⊕ to select. The ON/OFF TIMER is now set. Press MENU to exit. *When you perform AUTO PROGRAM, all ON/OFF TIMER settings will be erased.* 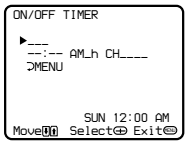

Using the SET UP menu

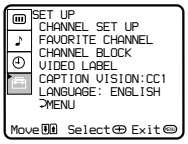

For detailed information on using the remote to modify menu settings, refer to "Learning menu selection" on page 18.

To select the SET UP menu:

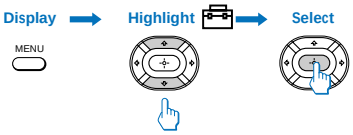

Notes

- The FAVORITE CHANNEL feature is not available for the AUX input.
- Your remote control can be programmed to operate your cable box. (see page 28)

CHANNEL SET UP *Basic set up options for viewing*	With the CHANNEL SET UP menu open: **1** Use ↑ or ↓ to access the feature you want to change. **2** Press ⊕ to select the feature. **CABLE:** Select ON if your TV is connected to a cable system. (After setting CABLE, you will need to run AUTO PROGRAM.) 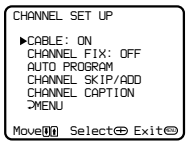 **CHANNEL FIX:** Press ⊕ and then use the ↑ or ↓ buttons to set the TV's input to one of the following options: **2-6:** When a cable box is connected to the VHF/UHF input. Press DBS/CABLE (FUNCTION) and then CH +/– to change channels. **AUX 2-6:** When a cable box is connected to AUX and a cable or antenna is connected to VHF/UHF. You can alternate between the two inputs by pressing ANT on the remote control. (KV-27S65, 27V65 only) **VIDEO 1:** When you have connected video equipment (e.g. A/V receiver) and you want the TV input fixed to it. You will be able to alternate between video sources using the A/V receiver. **OFF:** When you want to switch CHANNEL FIX off. Press ANT on the remote control until you reach a picture. *ON/OFF TIMER and CHANNEL BLOCK settings will be erased when CHANNEL FIX is set.* **AUTO PROGRAM:** Instructs the TV to automatically program all receivable channels. **CHANNEL SKIP/ADD:** With the CHANNEL SKIP/ADD window open: **1** Place the cursor next to SKIP or ADD. (only one option will be displayed) **2** Choose the desired channel using CH +/–, or by selecting with the 0-9 buttons and pressing ENTER. **3** Press ⊕ to activate. 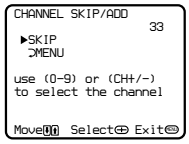

Using your Menus (continued)

Using the SET UP menu (continued)

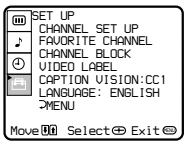

For detailed information on using the remote to modify menu settings, refer to "Learning menu selection" on page 18.

To select the SET UP menu:

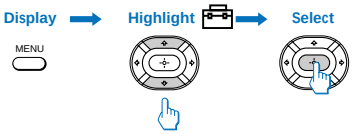

To erase the CHANNEL BLOCK settings

Press RESET while the SET UP menu is displayed.

CHANNEL SET UP (continued) *Basic set up options for viewing*	**CHANNEL CAPTION:** You will be able to label up to 12 channels with their call letters.(except KV-20V80) With the CHANNEL CAPTION menu open: **1** Press ⊕ and then ↑ or ↓ to access the desired channel, and press ⊕ again. **2** Press ↑ or ↓ to display the first letter or number of the caption and press ⊕ to select it. **3** Press ⊕ to activate. To erase a caption, press RESET. CHANNEL CAPTION ▶ ___ ___ MENU Move Select Exit
CHANNEL BLOCK *Prevent child access to certain channels.*	You will be able to block two channels. With the CHANNEL BLOCK window open: **1** Choose 1 or 2 and press ⊕. **2** Press ↑ or ↓ to display the channel you want to block. **3** Press ⊕ to activate. When you select the blocked channel, BLOCKED will appear on the screen. CAPTION VISION will also be blocked. *When you perform AUTO PROGRAM, your CHANNEL BLOCK settings will be erased.* CHANNEL BLOCK ▶1.CH___ 2.CH___ MENU Select a program Move Select Exit

FAVORITE CHANNEL *Quick access to favorite channels*	**Setting FAVORITE CHANNEL:** **1** Press ⊕ and then ↑ or ↓ to select AUTO or MANUAL. (Selecting AUTO will display the last five channels chosen with the remote control.) **2** Press ↑ or ↓ to move the cursor to 1, 2, 3, 4 or 5 and press ⊕. **3** Press ↑ or ↓ to access the desired channel and press ⊕ . **4** For KV-27S65, 27V65 only, you can preview your favorite channels in the window picture, to do so, set PREVIEW to ON. **Using FAVORITE CHANNEL:** **1** Press ⊕ when in normal viewing mode. Your FAVORITE CHANNEL options will appear. **2** Press ↑ or ↓ to access the channel you want to watch, and press ⊕. **3** For models KV-27S65, 27V65 only, if PREVIEW is ON, a window picture displays your favorite channels as you cycle through the options. FAVORITE CHANNEL MODE: AUTO ▶PREVIEW: ON 1.___ 2.___ 3.___ 4.___ 5.___ MENU Move Select Exit 125 ESPN 14 ABC 48 CBS ▶ 16 HBO 5 CBC Exit
VIDEO LABEL *Easy recognition of connected equipment (e.g. DBS, VHS, etc.)*	This feature allows you to label each input mode so that you can easily identify connected equipment (e.g. you can label VIDEO 1 as VHS). (except KV-20V80) With the VIDEO LABEL window open: **1** Press ↑ or ↓ to move to the input mode you want to label and press ⊕. **2** Press ↑ or ↓ to choose the label and press ⊕. **VIDEO LABEL** Options: Video 1: VHS, 8mm, BETA, LD, GAME, DBS, DVD, WEB, RECEIVER, DTV. Video 2/3: VHS, 8mm, BETA, LD, GAME, DBS, DVD, WEB, RECEIVER, DTV. *When VIDEO LABEL is set to WEB, the picture will darken, creating an ideal picture for WebTV viewing.* VIDEO LABEL ▶VIDEO 1: VIDEO 1 VIDEO 2: VIDEO 2 VIDEO 3: VIDEO 3 MENU Move Select Exit
LANGUAGE	(except Canadian models) You can change the language of your menus to either ENGLISH or ESPAÑOL.

Operating video equipment

Programming the remote

You can use the supplied remote control to operate Sony or non-Sony video equipment.

1. Press CODE SET.
2. Press VTR/DVD (FUNCTION).
3. Use the 0-9 buttons to key in the manufacturer's code number from the following chart.
4. Press ENTER.

VCR manufacturer code numbers

Manufacturer	Code
Sony	301, 302, 303
Aiwa	338, 344
Broksonic	319, 317
Canon	309, 308
Daewoo	341, 312, 309
Emerson	319, 320, 316, 317, 318,341
Fisher	330, 335
Funai	338
General Electric	329, 304, 309
Go Video	322
Goldstar	332
Hitachi	306, 304, 305,338
JVC	314, 336, 337, 345, 346, 347
Kenwood	314, 336, 332, 337
LXI (Sears)	332, 305, 330, 335, 338
Magnavox	308, 309, 310
Mitsubishi/MGA	323, 324, 325, 326
NEC	314, 336, 337
Panasonic	308, 309, 306, 307
Philips	308, 309, 310
Pioneer	308
Quasar	308, 309, 306
RCA/PROSCAN	304, 305, 308, 309, 311, 312, 313, 310, 329
Realistic	309, 330, 328, 335, 324, 338
Sansui	314
Samsung	322, 313, 321
Sanyo	330, 335
Sharp	327, 328
Sylvania	308, 309, 338, 310
Symphonic	338
Technics	309, 308
Toshiba	312, 311
Wards	327, 328, 335, 331, 332
Zenith	331

Operating a VCR	Buttons on the remote control
To turn on or off	Press VTR (POWER).
To select a channel directly	Press the 0 – 9 buttons.
To change channels	Press CH +/–.
To record	Press ► and ● simultaneously.
To play	Press ►.
To stop	Press ■.
To fast forward	Press ►►.
To rewind the tape	Press ◄◄.
To pause	Press ❚❚. To resume normal playback, press again or press ►.
To search the picture forward or backward	Press ►► or ◄◄ during playback. To resume normal playback, release the button.
To change input mode	Press TV/VTR.

Tips

- In some rare cases, you may not be able to operate your non-Sony video equipment with the supplied remote control. In this case, please use the equipment's own remote control.
- The code numbers for Sony VCR's are assigned at the factory as follows:

VHS VCR	301 (preset code for the supplied remote control)
8 mm VCR	302
Beta, ED Beta VCRs	303

- When you remove the batteries, the code number may revert to the factory setting.

MDP (Multi Disc Player) manufacturer code numbers

Manufacturer	Code
Sony	701
Panasonic	704, 710
Pioneer	702

Operating an MDP	Buttons on the remote control
To turn on or off	Press VTR/DVD (POWER).
To play	Press ►.
To stop	Press ■.
To pause	Press ❚❚. To resume normal playback, press again or press ►.
To search the picture forward or backward	Press ►► or ◄◄ during playback. To resume normal playback, press ►.
To search the chapter forward or backward	Press CH +/–.

DVD (Digital Versatile Disc) manufacturer code numbers

Manufacturer	Code
Sony	751
Panasonic	753
Pioneer	752
RCA	755
Toshiba	754

Operating a DVD player	Buttons on the remote control
To turn on or off	Press VTR/DVD (POWER).
To play	Press ►.
To stop	Press ■.
To pause	Press ❚❚. To resume normal playback, press again or press ►.
To search the picture forward or backward	Press ►► or ◄◄ during playback. To resume normal playback, press ►.
To search the chapter forward or backward	Press CH +/–.
To select chapters directly	0–9 + ENTER.
MENU	Press to display DVD menu.
To move cursor in menu	Use your arrow buttons ↑↓, ←→.

Operating a cable box or DBS receiver

Programming the remote

You can program the supplied remote control to operate a cable box or DBS receiver.

1. Press CODE SET.
2. Press DBS/CABLE (FUNCTION).
3. Use the 0-9 buttons to key in the manufacturer's code number from the following chart.
4. Press ENTER.

For more details on operating the cable box or DBS receiver

Refer to the operating instructions that were supplied with the equipment.

If the remote control doesn't work

- First, try repeating the setup procedures using the other codes listed for your equipment.

Tips

- If more than one code number is listed, try entering them one by one until you come to the correct code for your equipment.
- If you enter a new code number, the code number you previously entered at that setting is erased.
- In some rare cases, you may not be able to operate your equipment with the supplied remote control. In this case, use the equipment's own remote control unit.
- Whenever you remove the batteries the code numbers may revert to the factory setting and must be reset.

Manufacturer code numbers (cable box)

Manufacturer	Code
Hamlin/Regal	222, 223, 224, 225, 226
Jerrold/G. I.	201, 202, 203, 204, 205, 206, 207, 208, 218
Oak	227, 228, 229
Panasonic	219, 220, 221
Pioneer	214, 215
Scientific Atlanta	209, 210, 211
Tocom	216, 217
Zenith	212, 213

Manufacturer code numbers (DBS receiver)

Manufacturer	Code
Sony	801 (preset code for remote control)
General Electric	802
Hitachi	805
Hughes	804
Panasonic	803
RCA/PROSCAN	802, 808
Toshiba	806, 807

Troubleshooting

Consult the table below; it suggests solutions to specific problems. If you need more information, consult the operating instructions guide.

Problem	What it could be	What you can do
Cannot Operate Single Tuner PIP (KV-27S45, 27V45)	• VCR may not be connected to your TV properly. • VCR may not be turned on.	• Ensure that you have set your VCR correctly. (see page 7)
A red light keeps flashing on the TV for more than a few seconds	• Your TV may need service.	• Call your local Sony service center.
TV makes a noise when turned on	• This is a normal function of your TV.	
Screen is not lit and there is no sound	• Power cord may not be plugged in. • Batteries may not have been placed with the correct polarity. • TV/VIDEO setting may be incorrect.	• Press TV/VIDEO until you receive a channel. • Perform AUTO SET UP again by pressing the SET UP button on your TV. (see page 13)
Poor or no picture (screen lit), good sound	• VIDEO menu settings may not be adjusted correctly. • Antenna/cable connections may be faulty. • VIDEO LABEL inputs may be set to WEB. (This label darkens the screen for ideal WebTV viewing.)	• Readjust your VIDEO menu settings.(see page 19) • Check your VIDEO LABEL settings. (see page 25)
Good picture, no sound	• Sound may be set to MUTE. • Your TV may be set to SAP. • Speaker may not be set correctly.	• Check the MTS setting in the AUDIO menu. (see page 21) • Check your SPEAKER settings. (see page 20)
No color	• Color settings may not be adjusted correctly.	• Adjust the COLOR settings in the VIDEO menu. (see page 19)

Troubleshooting (continued)

Problem	What it could be	What you can do
Only snow and noise appear on the screen	• CABLE setting may not be set correctly in the SET UP menu. • Antenna/cable connections may not be correct. • TV may be set to AUX mode.	• Ensure that you have selected the correct CABLE mode in the SET UP menu. (see page 23) • Press ANT on your remote control to change the input mode. (see page 15)
Cannot receive upper channels (UHF) when using an antenna	• CABLE setting may not be correct in the SET UP menu.	• Ensure that CABLE is set to OFF in the SET UP menu. (see page 23) • Use AUTO PROGRAM to add receivable channels that are not presently in TV memory. (see page 24)
Cannot receive any channels when using cable	• CABLE setting may not be set correctly in the SET UP menu.	• Ensure that CABLE is set to ON in the SET UP menu. (see page 23) • Use AUTO PROGRAM to add receivable channels that are not presently in TV memory. (see page 24)
Cannot gain enough volume when using a cable box	• Volume may not be adjusted on your cable box.	• Press TV (FUNCTION) and adjust the TV's volume.
TV is fixed to one channel	• CHANNEL FIX settings may not be correct.	• Check your CHANNEL FIX settings. (see page 23)

If, after reading these operating instructions, you have additional questions related to the use of your Sony television, please call our Direct Response Center at 1-800-222-SONY (7669).

SECTION 2
DISASSEMBLY

2-1. REAR COVER REMOVAL

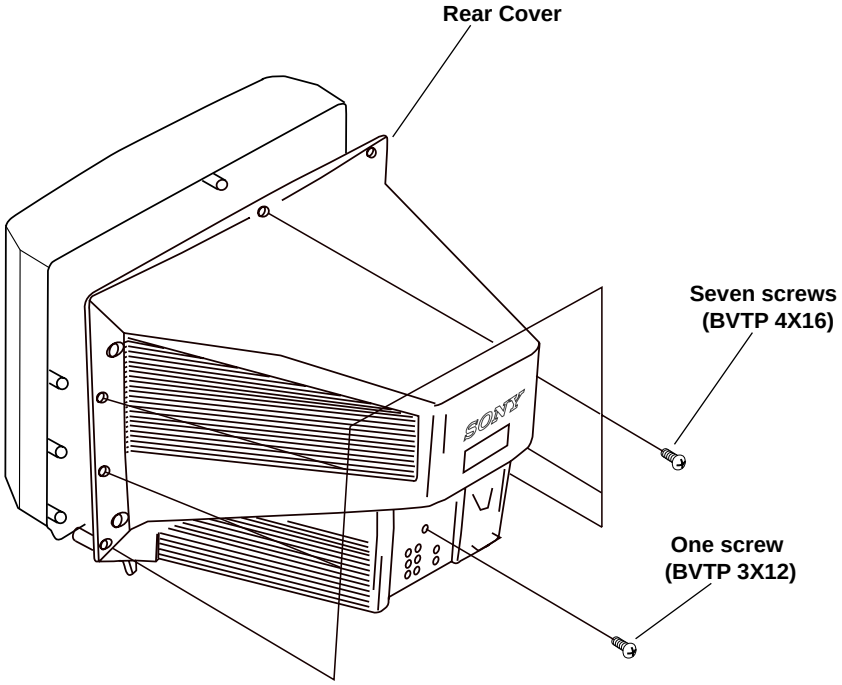

2-2. A BOARD REMOVAL

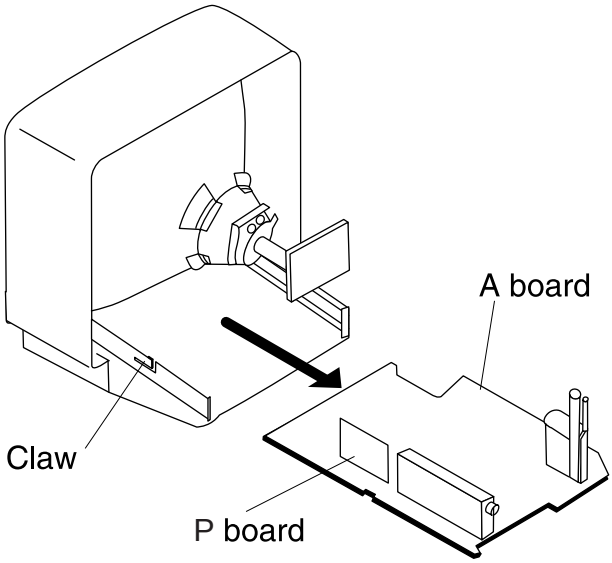

2-3. SERVICE POSITION

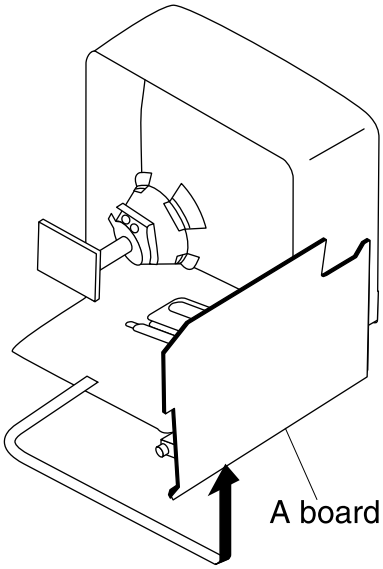

2-4. PICTURE TUBE REMOVAL

WARNING **Before removing anode cap:**

H.V. remains in the CRT even after the power is disconnected.

To avoid electrical shock, discharge CRT before attempting to remove the anode cap : Short between anode and CRT coating earth ground strap.

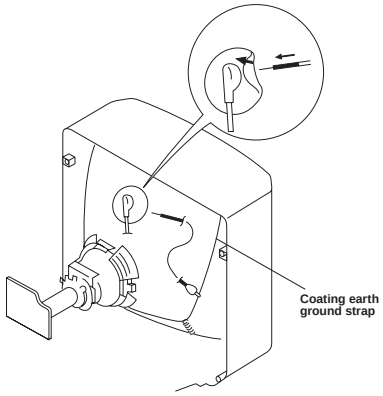

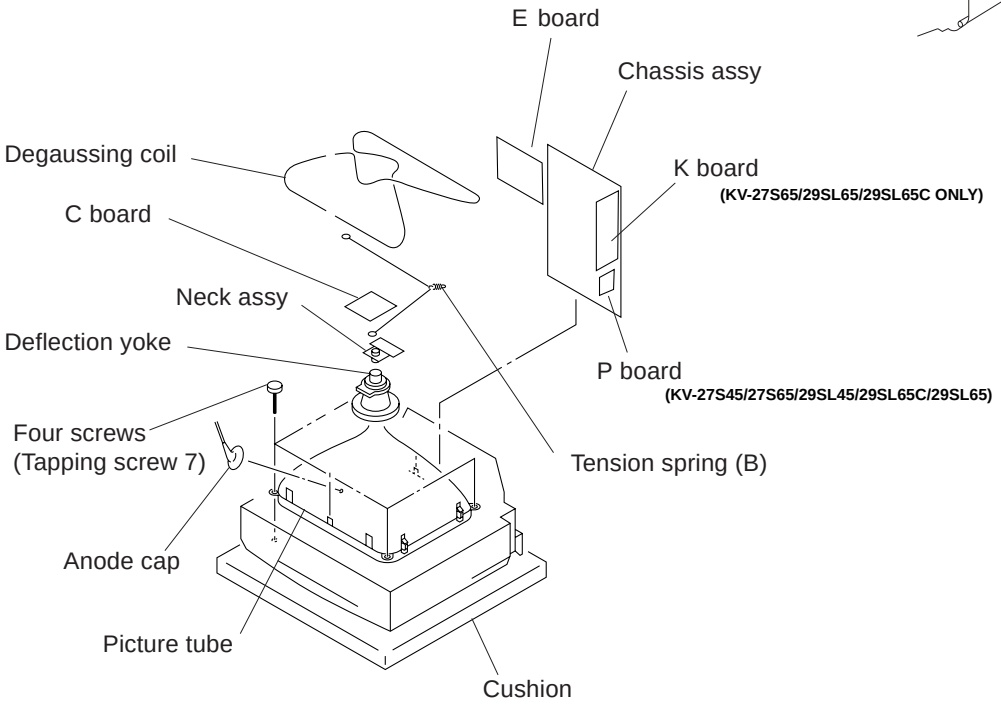

REMOVAL OF THE ANODE-CAP

NOTE: Short circuit the anode of the picture tube and the anode cap to the metal chassis, CRT shield or carbon painted on the CRT, after removing the anode.

REMOVAL PROCEDURES

① Turn up one side of the rubber cap in the direction indicated by arrow ⓐ.

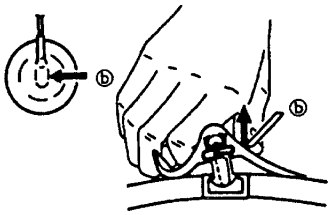

② Use your thumb to pull the rubber cap firmly in the direction indicated by arrow ⓑ.

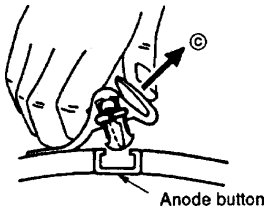

③ When one side of the rubber cap separates from the anode button, the anode-cap can be removed by turning the rubber cap and pulling it in the direction of arrow ⓒ.

HOW TO HANDLE AN ANODE-CAP

① Do not use sharp objects which may cause damage to the surface of the anode-cap.
② Do not squeeze the rubber covering too hard to avoid damaging the anode-cap. A material fitting called a shatter-hook terminal is built into the rubber.
③ Do not force turn the foot of the rubber cover. This may cause the shatter-hook terminal to protrude and damage the rubber.

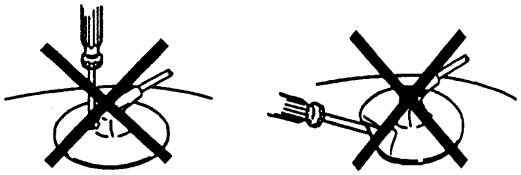

SECTION 3
SET-UP ADJUSTMENTS

The following adjustments should be made when a complete realignment is required or a new picture tube is installed. These adjustments should be performed with rated power supply voltage unless otherwise noted.

The controls and switch should be set as follows unless otherwise noted:

PICTURE control ..... normal

BRIGHTNESS control ..... normal

Perform the adjustments in order as follows:

1. Beam Landing
2. Convergence
3. Focus
4. Screen (G2) and White Balance

Note: Test Equipment Required

1. Color Bar Pattern Generator
2. Degausser
3. DC Power Supply
4. Digital Multimeter

3-1. BEAM LANDING

Preparation:

- Feed in the white pattern signal.
- Before starting, degauss the entire screen.

1. Input a raster signal with the pattern generator.
2. Loosen the deflection yoke mounting screw, and set the purity control to the center as shown in Fig.2.
3. Turn the raster signal of the pattern generator to green.
4. Move the deflection yoke backward, and adjust with the purity control so that green is in the center and red and blue are at the sides evenly. (Fig.3)
5. Move the deflection yoke forward, and adjust so that the entire screen becomes green. (Fig.1)
6. Switch over the raster signal to red and blue and confirm the condition.
7. When the position of the deflection yoke is determined, tighten it with the deflection yoke mounting screw.
8. When landing at the corner is not right, adjust by using the disk magnets. (Fig.4)

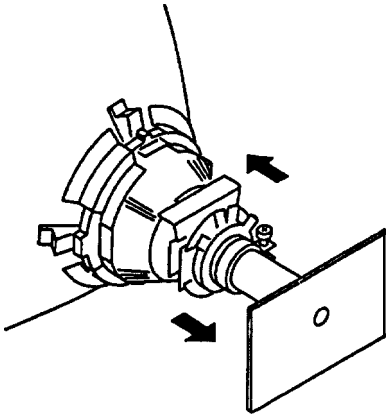

Fig. 1

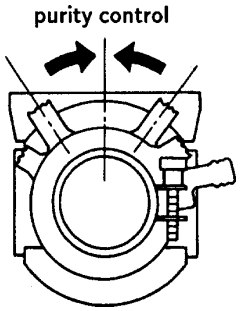

Fig. 2

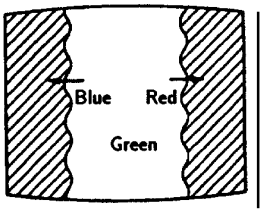

Fig. 3

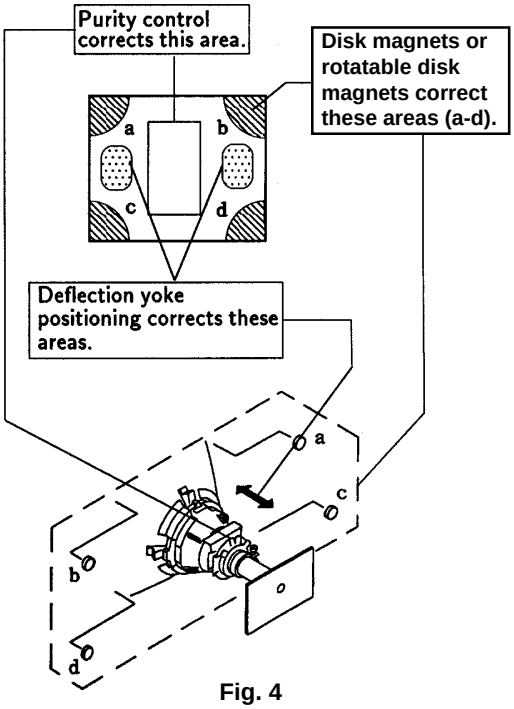

Fig. 4

3-2. CONVERGENCE

Preparation:

- Before starting, perform FOCUS, V. LIN and V. SIZE adjustments.
- Set BRIGHTNESS control to minimum.
- Feed in dot pattern.

(1) Vertical Static Convergence

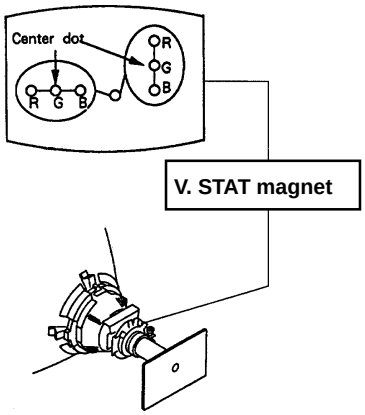

Fig. 5

1. Adjust V. STAT magnet to converge red, green and blue dots in the center of the screen. (Vertical movement)

   Tilt the V. STAT magnet and adjust static convergence to open or close the V. STAT magnet.

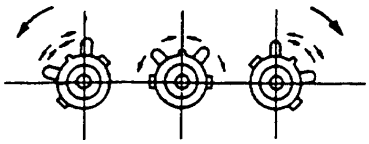

2. When the V. STAT magnet is moved in the direction of arrow ⓐ and ⓑ, red, green, and blue dots move as shown below:

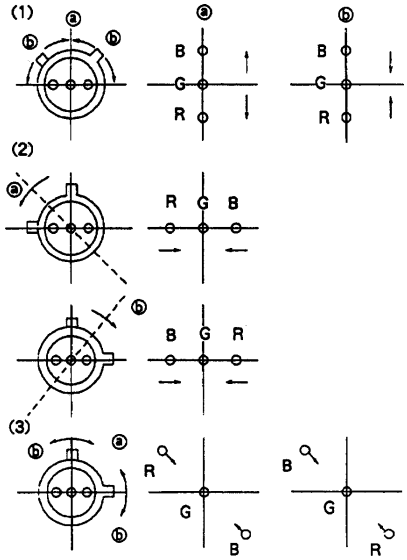

If the blue dot does not converge with red and green dots, perform the following steps:

- Move BMC magnet (a) to correct insufficient H. Static convergence.
- Rotate BMC magnet (b) to correct insufficient V. Static convergence.

In either case, repeat Beam Landing Adjustment.

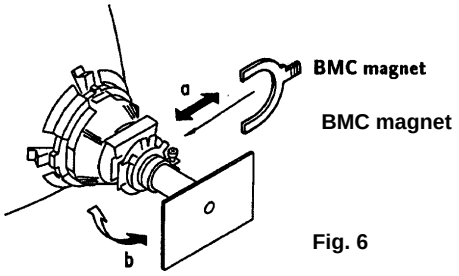

Fig. 6

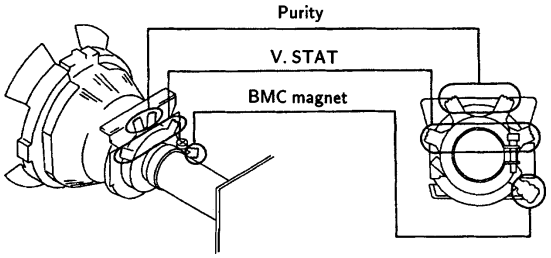

Fig. 7

(2) Dynamic Convergence Adjustment

Preparation:

- Before starting, perform Horizontal and Vertical Static Convergence Adjustment.

1. Slightly loosen deflection yoke screw.
2. Remove deflection yoke spacers.
3. Move the deflection yoke for best convergence as shown below. (Fig. 8)
4. Tighten the deflection yoke screw.
5. Install the deflection yoke spacers.

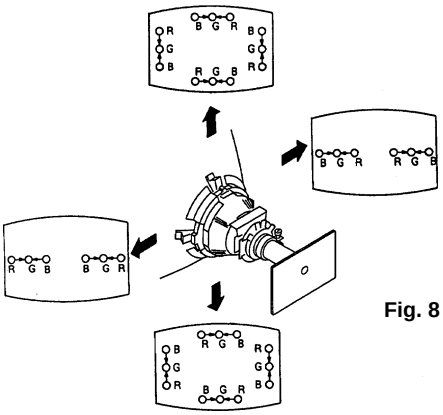

Fig. 8

(3) Screen-corner Convergence

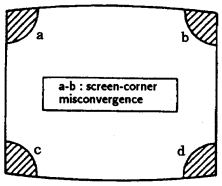

Fig. 9

Affix a permalloy assembly corresponding to the misconverged areas:

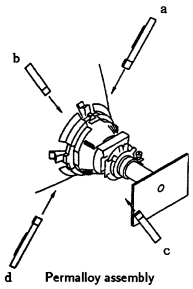

3-3. FOCUS

1. Adjust FOCUS control for best picture.

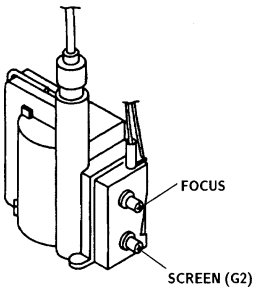

Fig. 10

3-4. SCREEN (G2)

1. Input a dots pattern.
2. Set the PICTURE and BRIGHT controls at minimum and COLOR control at normal.
3. Adjust SBRT, GCUT, BCUT in service mode with an oscilloscope as shown in Fig. 11 so that voltages on the red, green, and blue cathodes are 170Vdc.

Fig. 11

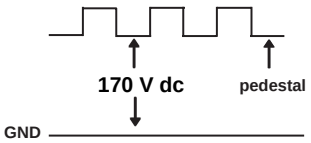

4. Observe the screen and adjust SCREEN (G2) VR to obtain the faintly visible background of dot signal.

3-5. METHOD OF SETTING THE SERVICE ADJUSTMENT MODE

(1) SERVICE MODE PROCEDURE

1. Standby mode. (Power off)
2. DISPLAY → 5 → VOL (+) → POWER on the Remote Commander. (Press each button within a second.)

(2) SERVICE ADJUSTMENT MODE IN

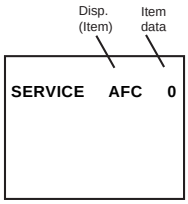

3. The CRT displays the item being adjusted.
4. Press 1 or 4 on the Remote Commander to select the item.
5. Press 3 or 6 on the Remote Commander to change the data.
6. Press MUTING then ENTER to write into memory.

(3) SERVICE ADJUSTMENT MODE MEMORY

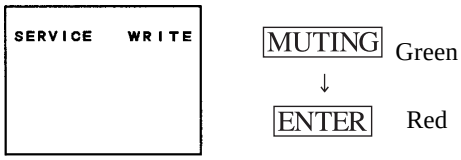

7. Turn set off and on to exit.

3-6. WHITE BALANCE ADJUSTMENTS

1. Input an entire white signal.
2. Set to Service adjustment Mode.
3. Set DCOL to "0"
4. Set the PICTURE and BRIGHT to minimum.
5. Adjust with SBRT if necessary.
6. Select GCUT and BCUT with 1 and 4 .
7. Adjust with 3 and 6 for the best white balance.
8. Set the PICTURE and BRIGHT to maximum.
9. Select GDRV and BDRV with 1 and 4 .
10. Adjust with 3 and 6 for the best white balance.
11. Reset DCOL to "1".
12. Write into the memory by pressing MUTING then ENTER .

SECTION 4
SAFETY RELATED ADJUSTMENTS

A BOARD

⋈ R584 CONFIRMATION METHOD (HV HOLD-DOWN CONFIRMATION) AND READJUSTMENTS

The following adjustments should always be performed when replacing the following components which are marked with ◪ on the schematic diagram:

DY, C511,C572, C573, C574, C575, D573, D574, R582, R583 R585, R586, R578, R579, T504, IC301, IC521, IC603, C507, C508, C509, C515, C520, L591,L501

(1) Preparation before Confirmation

Using Variac, apply AC input voltage: 120±2VAC
(or 220 ± 2 VAC for KV-29SL40A/29SL40C 29SL65C/29XT11A ONLY)

1) Turn the POWER switch ON.

2) Input a white signal and set the PICTURE and BRIGHT controls to maximum.

3) Confirm that the voltage between C574 (+) or TP503 and ground is more than: 105VDC.

(2) Hold-down Operation Confirmation

1) Connect the current meter between Pin 11 of the FBT (T504) and the PCB land where Pin 11 would normally attach. (see figure 1.0 on next page)

2) Input a dot signal and set PICTURE and BRIGHTNESS to minimum: IABL = 100±100µA

3) Confirm the voltage of A board TP-600 is 135 ± 3VDC

4) Connect the Digital Voltmeter and the DC power supply via diode 1SS119 to C574 (+). (See figure 1.0 on next page.)

5) Increase the DC power voltage gradually until the picture blanks out.

6) Turn DC power source off immediately.

7) Read the digital voltmeter indication.

STANDARD
Less than or equal to: 141.3 VDC

8) Input a white signal and set PICTURE and BRIGHTNESS to maximum: IABL = 1750±100µA

9) Repeat steps from (4) to (7).

STANDARD
Less than or equal to: 141.3 VDC

(3) Hold-down Readjustment

If the current setting indicated in step 2-2 cannot be met, readjustment should be performed by altering the resistance value of R584, a component marked with ⋈.

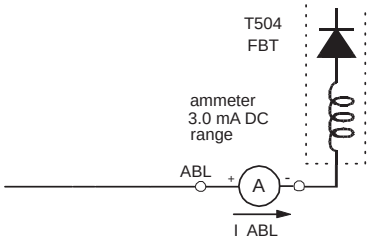

B+ VOLTAGE CONFIRMATION AND ADJUSTMENT

The following adjustments should always be performed when replacing the following components which are marked with ◪ on the schematic diagram:

IC603, IC601, R699

1) Using Variac, apply AC input voltage: 130 ± 2.0 VAC (or 220.0 ± 2.0 VAC for KV-29SL40A/29SL40C/ 29SL65C/29XT11A only).
2) Input a dot signal.
3) Set the PICTURE control and the BRIGHT control to minimum.
4) Set to service adjustment mode.
5) Select PADJ with 1 and 4 .
6) Adjust with 6 to the 0 level.
7) Confirm the voltage of A BOARD TP-600 is less than 138 VDC.
8) If step 7 is not satisfied, replace the components, repeat the above steps.
9) Adjust with 3 and 6 for: 135 ± 3 VDC
10) Write into the memory by pressing MUTING then ENTER.

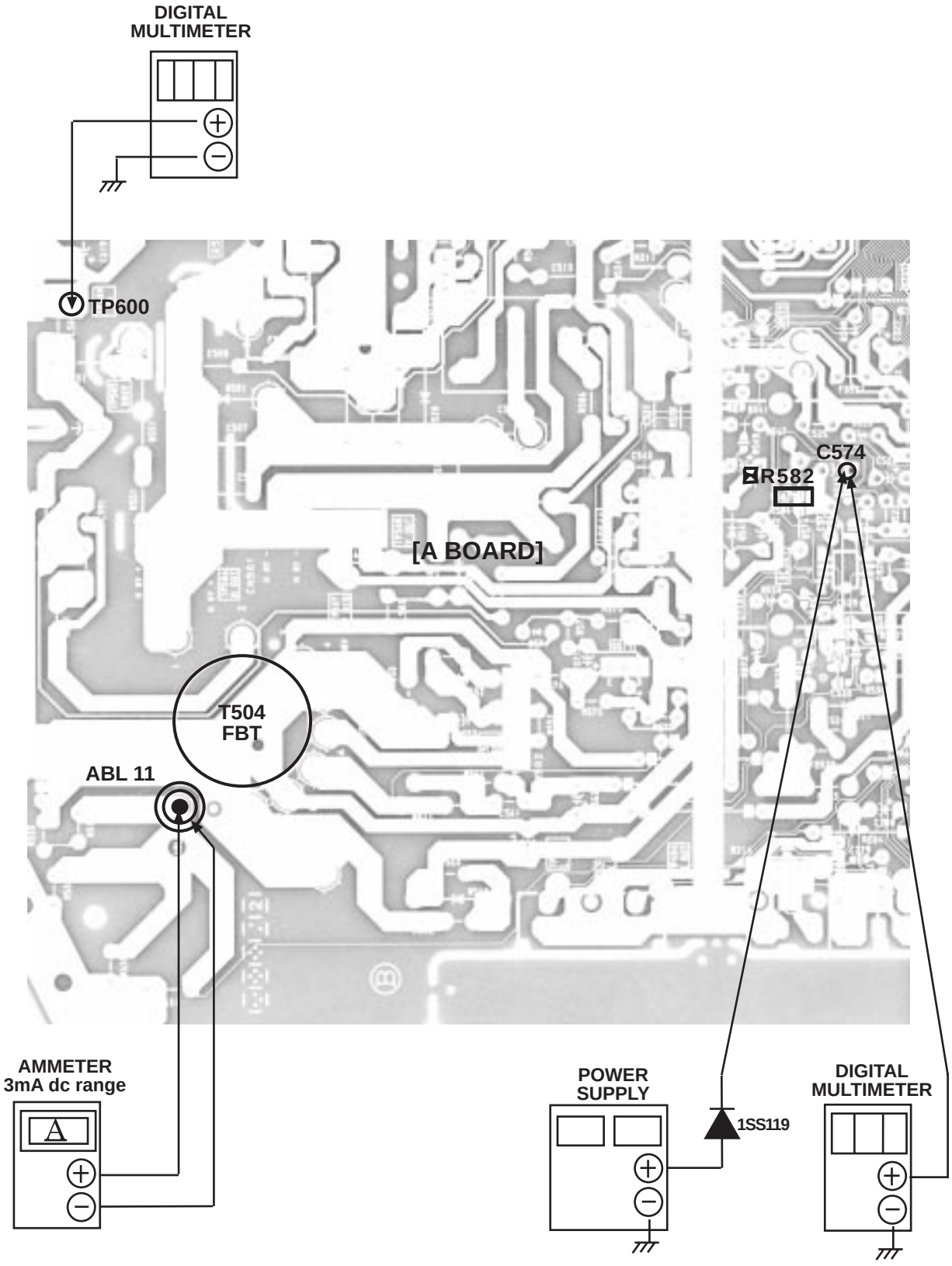
DIGITAL
MULTIMETER
TP600
[A BOARD]
C574
R582
T504
FBT
ABL 11
AMMETER
3mA dc range
A
POWER
SUPPLY
1SS119
DIGITAL
MULTIMETER

Figure 1.0

SECTION 5
CIRCUIT ADJUSTMENTS

5-1. ELECTRICAL ADJUSTMENT BY REMOTE COMMANDER

Use Remote Commander (RM-Y167) to perform circuit adjustments on this model.

NOTE : Test Equipment Required:
1. Pattern Generator
2. Frequency Counter
3. Digital Multimeter
4. Audio OSC

(1) Method of Setting the Service Adjustment Mode

SERVICE MODE PROCEDURE

1. Standby mode. (Power off)
2. DISPLAY → 5 → VOL (+) → POWER on the Remote Commander. (Press each button within a second.)

SERVICE ADJUSTMENT MODE IN

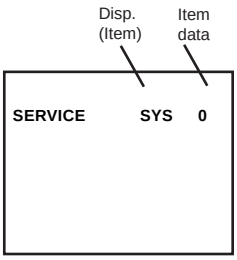

3. The CRT displays the item being adjusted.
4. Press 1 or 4 on the Remote Commander to select the item.
5. Press 3 or 6 on the Remote Commander to change the data.
6. Press MUTING then ENTER to write into memory.

SERVICE ADJUSTMENT MODE MEMORY

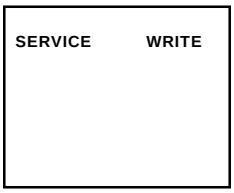

MUTING Green
↓
ENTER Red

7. Press 8 then ENTER on the Remote Commander to initialize.

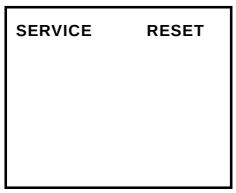

Carry out step 7 when adjusting IDs 0 to 4 and when replacing and adjusting IC003.

8. Turn set off and on to exit.

(2) Memory Write Confirmation Method

1. After adjustment, pull out the plug from the AC outlet, then replace the plug in the AC outlet again.
2. Turn the power switch ON and set to service mode.
3. Call the adjusted items again to confirm they were adjusted.

(3) Adjust Buttons and Indicator

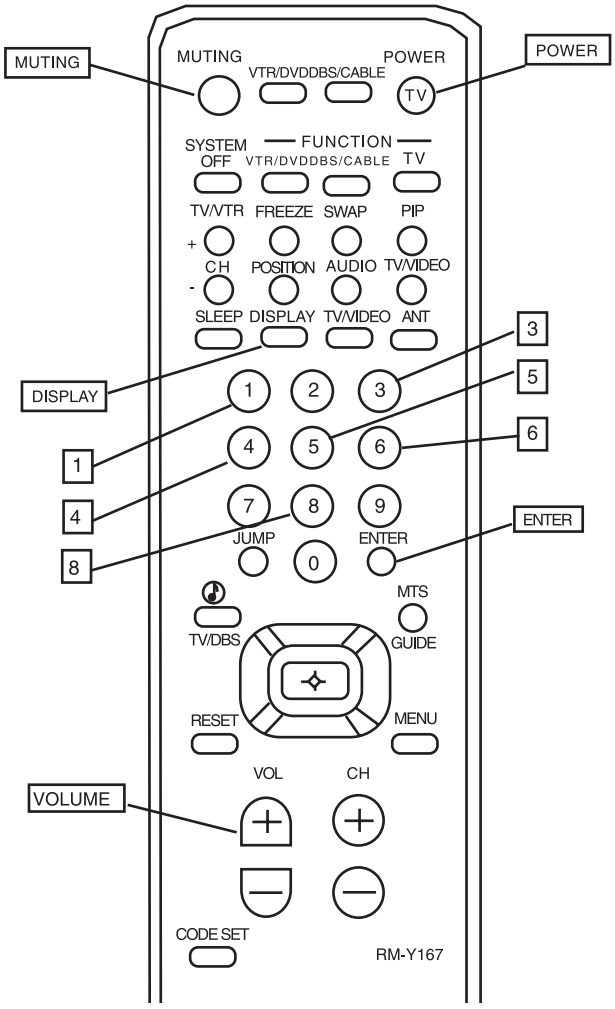

RM-Y167

(4) Item of Adjustments

NO.	ITEM	FUNCTION	DATA RANGE	INITIAL DATA NTSC	PAL-M	PAL-N	VIDEO	AVERAGE DATA
1	HSIZ	HORIZONTAL AMP. ADJ.	0-63	45	45	45		48
2	HPOS	HORIZONTAL POS. ADJ.	0-63	10	10	10		10
3	VBOW	VRT LINE BOWING ADJ.	0-15	6				6
4	VANG	VRT LINE BOW SLANT ADJ.	0-15	5				5
5	TRAP	HORIZ. TRAPEZOID ADJ.	0-15	7				5
6	PAMP	HORIZ. PIN DISTORTION ADJ.	0-63	20	20	20		30
7	CPIN	SAME AS PAMP-SCRN TP/BTM	0-63	40	40	40		30
8	VSIZ	VERTICAL AMP. ADJUST	0-63	31	31	38		35
9	VPOS	VERTICAL POSITION ADJ.	0-63	35	35	35		35
10	VLIN	VERTICAL LINEARITYADJ.	0-15	6	6	6		6
11	SCOR	VERTICAL AMOUNT ADJ.	0-15	8	8	8		8
12	VZOM	16:9 CRT Z MODE ON/OFF	0,1	0				0
13	EHT	VRT HI-VOLT. CORRECTION	0-15	4				4
14	ASP	ASPECT RATIO CONTROL	0-63	47				47
15	SCRL	16:9 CRT Z MODE TRAN SCRL	0-63	31				31
16	HBLK	RGB OUT WIDTH CONTROL	0,1	1				1
17	LBLK	LEFT SCREEN HBLK CONTROL	0-15	15				15
18	RBLK	RGT SCREEN HBLK CONTROL	0-15	3				3
19	VUSN	V SAW WAVEFORM COMPRES	0,1	0				0
20	HDW	H. DRIVE PULSE WIDTH	0,1	0				0
21	EWDC	EW/DC ADJUST	0,1	0				0
22	LVLN	SCREEN BTM VRT LIN ADJUST	0-15	0				0
23	UVLN	SCREEN TOP VRT LIN ADJUST	0-15	0				0
24	RDRV	R OUTPUT DRIVE CONTROL	0-63	35				40
25	GDRV	G OUTPUT DRIVE CONTROL	0-63	30				35
26	BDRV	B OUTPUT DRIVE CONTROL	0-63	30				35
27	RCUT	R OUTPUT CUTOFF CONTROL	0-15	10				7
28	GCUT	G OUTPUT CUTOFF CONTROL	0-15	7				5
29	BCUT	B OUTPUT CUTOFF CONTROL	0-15	7				5
30	DCOL	DYNAMIC COLOR ON/OFF	0,1	0				1
31	SHUE	SUB HUE	0-31	14				8
32	SCOL	SUB COLOR	0-31	14	14	14		14
33	SBRT	SUB BRIGHTNESS	0-31	11				12
34	RON	R OUTPUT ON/OFF	0,1	1				1
35	GON	G OUTPUT ON/OFF	0,1	1				1
36	BON	B OUTPUT ON/OFF	0,1	1				1
37	AXPL	AXIS PAL	0,1	0				0
38	AXNT	AXIS NTSC	0,1	0				0
39	CBPF	CHROMA BPF ON/OFF	0,1	0*, 1**				
40	CTRP	Y TRAP FILTER ON/OFF	0,1	1*, 0**				
41	COFF	COLOR ON/OFF	0,1	0				0
42	KOFF	SET COLOR KILLER	0,1	0				0
43	SSHP	SUB SHARPNESS	0-15	7				7
44	SHPF	SHARPNESS CIRCUIT F0	0,1	1			1	1
45	PREL	PRE/OVR SHOOT SWITCHING	0,1	1				1
46	Y-DC	DC TRANS RATIO SWITCHING	0,1	1				1
47	GAMM	GAMMA CORRECTION AMNT	0-3	0				0
48	ABLM	ABL MODE SWITCHING	0,1	1				1
49	VTH	ABL C D VTH SWITCHING	0,1	1				1
50	YDEL	Y DELAY TIME CONTROL	0-15	7				7
51	NCOL	NO COLOR ID	0,1	1				1
52	FSC	FSC OUT ON/OFF	0,1	1*, 0**				
53	K-ID	KILLER ID CONTROL SW	0,1	0				0
54	HOSC	H VCO OSCILLATION FREQ	0-15	7				7
55	VSS	V SYNC SLICE LEVEL	0,1	0				0
56	HSS	H SYNC SLICE LEVEL	0,1	0				0
57	HMSK		0,1	1				1
58	VTMS	SELECT SIGNAL VTIM PIN	0-3	0				0
59	CDMD	V CNT DWN MODE SWITCHING	0-3	0			1	
60	AFC	AFC LOOP GAIN SWITCHING	0-3	0			0	

NO.	ITEM	FUNCTION	DATA RANGE	INITIAL DATA				AVERAGE DATA
				NTSC	PAL-M	PAL-N	VIDEO	
61	FIFR	FIELD FREQUENCY	0-3	3*, 1**				
62	SBAL	SUB BALANCE	0-31	14				14
63	DISP	OSD POSITION	0-127	15				15
64	PADJ	POWER ADJUSTMENT	0-63	3				3
65	PSHP	PIP SUB SHARPNESS	0-15	7				7
66	PPIX	PIP SUB CONTRAST	0-15	7				7
67	PHUE	PIP SUB HUE	0-15	3				3
68	PCOL	PIP SUB COLOR	0-15	5	5	5		5
69	PTRP	PIP C TRAP F0	0-15	7				7
70	PAFC	PiP AFC	0-3	1			1	1
71	PYDR	PIP Y DRIVE	0-31	14				14
72	UPED	U PED	0-15	8				8
73	VPED	V PED	0-15	8				8
74	U2PE	U2 PED	0-15	5				5
75	V2PE	V2 PED	0-15	5				5
76	Y2DR	Y2 DRIVE	0-31	20				20
77	U2DR	U2 DRIVE	0-31	18				18
78	V2DRV	V2 DRIVE	0-31	9				9
79	PSFO	PIP SHP F0	0,1	1				1
80	PCD2	PIP CD MODE 2	0,1	1			1	1
81	PDCT	PIP DC TRAN	0-7	4				4
82	PP/O	PIP PRE/OVER	0-3	1				1
83	PDLY	PIP Y DELAY	0-3	0				0
84	PBG	PIP BG	0-15	5				5
85	PEXT	PIP EXT COLOR	0,1	1*, 0**				1** 0*
86	PHMK		0,1	0				0
87	ABL0		0,1	0				0
88	ABL1		0-7	1				1
89	PHPO	PIP HORIZONTAL POSITION	0-63	58				58
90	PVPO	PiP VERTICAL POSiTiON	0-31	18				18
91	PYSD	PIP YS DELAY	0-15	1				1
92	PYDL	PIP Y INPUT DELAY	0-7	0				0
93	PHVI	PIP HV SYNC	0,1	0				0
94	PCLP	PIP CLAMP	0-3	0				0
95	PCLK	PIP CLOCK	0,1	1				1
96	PIHS	INSET HORIZONTAL SYNC	0-15	2				2
97	PIVS	INSET VERTICAL SYNC	0-63	22				22
98	PMVS	MAIN VERTICAL SYNV	0-63	17				17
99	PCON	PIP CONTRAST	0-15	10				10
100	PFRY	PIP FRAME Y	0-15	5				5
101	PFRC	PIP FRAME CHROMA	0-255	0				0
102	PFRW	PIP FRAME WIDTH	0-31	20				20
103	PSEL	PIP SEL	0,1	1				1
104	PPLL	PIP PLL	0-3	0				0
105	PVPE	PIP V PED	0-15	0				0
106	PUPE	PIP U PED	0-15	0				0

* NTSC MODELS
** TRINORMA MODELS

SERVICE	ID0	25

Note: No. 1 through 106 show adjustment order.

(5) Feature ID Map

	KV-	DESTINATION	ID-0	ID-1	ID-2	ID-3	ID-4	ID-5	ID-6	ID-7
1	**27S40**	(US)	153	1	13	195	31	1	0	64
2	**27S40**	(CND)	129	1	13	195	31	1	0	64
3	**27S45**	(US)	153	27	13	195	31	1	1	64
4	**27S45**	(CND)	129	27	13	195	31	1	1	64
5	**27S65**	(US)	153	27	15	195	31	1	7	64
6	**27S65**	(CND)	129	27	15	195	31	1	7	64
7	**29SL40**	(E)	145	1	141	195	63	1	0	64
8	**29SL40A**	(E)	151	1	141	195	55	1	0	64
9	**29SL40C**	(E)	145	1	141	195	63	1	0	64
10	**29SL45**	(E)	145	27	141	195	63	1	1	64
11	**29SL65**	(E)	145	27	143	195	63	1	7	64
12	**29SL65C**	(E)	145	19	143	195	63	1	7	64
13	**29XL40M**	(MX)	145	1	141	195	63	1	0	64
14	**29XL40P**	(E)	145	1	141	195	63	1	0	64
15	**29XT11A**	(E)	151	1	141	195	55	1	0	64

5-2. A BOARD ADJUSTMENTS

H. FREQUENCY ADJUSTMENT

1. Input a monoscope signal.
2. Set to Service adjustment Mode.
3. Connect a frequency counter to base of Q501 (TP-500 H. DRIVE).
4. Select the item of AFC, set to 3 level (free run).
5. Check H. Frequency for the 15735 ± 200 Hz. (NTSC) or check H. Frequency for the 15650 ± 200 Hz. (Trinorma)
6. Select the item of AFC again, adjust the level "0".
7. Write into the memory by pressing MUTING then ENTER .

V. FREQUENCY ADJUSTMENT

1. Select video 1 with no signal input.
2. Set the conditions with standard setting.
3. Connect the frequency counter across TP-508 or CN501 VDY (+) pin ⑥ connector and ground.
4. Check V. Frequency for the 60 ± 2 Hz (NTSC)
5. Check V. Frequency for the 50 ± 2 Hz (Trinorma).

SUB CONTRACT ADJUSTMENT (SCON)

1. Input a color-bar signal.
2. Select the red color.
3. Set to Service adjustment Mode.
4. Select the item DCOL to "0" level.
5. Set the conditions as follows.

PICTURE . . . . . MAX
COLOR . . . . . MIN
BRIGHT . . . . . CENTER

R ON . . . . . ON (1)
G ON . . . . . OFF (0)
B ON . . . . . OFF (0)

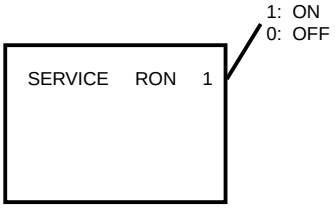

6. Connect an oscilloscope probe to C Board, CN301 Pin ⑤ (RED OUT).
7. Select RDRV with 1 and 4 .
8. Adjust with 3 and 6 for: 1.90 ± 0.05 Vp-p.

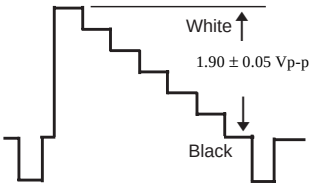

9. Reset the item DCOL to "1" level.
10. Write the memory by pressing MUTING then ENTER .
11. Return the following back to normal after adjustment.

PICTURE . . . . . MAX
COLOR . . . . . CENTER
BRIGHT . . . . . CENTER

R ON . . . . . ON (1)
G ON . . . . . ON (1)
B ON . . . . . ON (1)

DISPLAY POSITION ADJUSTMENT (DISP)

1. Input a color-bar signal.
2. Set to Service adjustment Mode.
3. Select DISP with 1 and 4 .
4. Adjust with 3 and 6 for adjustment of characters to center .
5. Write the memory by pressing MUTING then ENTER .
6. Check if the text is displayed on the screen.

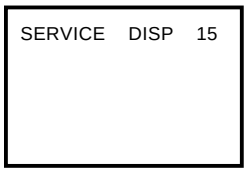

SUB BRIGHT ADJUSTMENT (SBRT)

1. Input a cross-hatch signal.
2. Set to Service adjustment Mode.
3. Set the PICTURE and BRIGHT to minimum.
4. Select SBRT with 1 and 4 .
5. Adjust with 3 and 6 to obtain a faintly visible cross-hatch.
6. Write into the memory by pressing MUTING then ENTER.

SUB HUE, SUB COLOR ADJUSTMENT (SHUE, SCOL)

1. Input a color-bar signal.
2. Set to Service adjustment Mode.
3. Select the item DCOL and set to "0" level.
4. Connect oscilloscope probe to C Board, CN301 Pin ⑦ (BLUE OUT).
5. Select SHUE and SCOL with 1 and 4 .
6. Adjust with 3 and 6 for the V1 = V4 ± 0.1Vp-p (SCOL) and V2 = V3 ± 0.1Vp-p (SHUE).

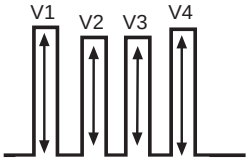

7. Reset the item DCOL to "1" level.
8. Write into the memory by pressing MUTING then ENTER .

V. SIZE ADJUSTMENT (VSIZ)

1. Input a cross-hatch signal.
2. Set to Service adjustment mode.
3. Select VSIZ with 1 and 4 .
4. Adjust with 3 and 6 for the best vertical size.

V. SIZE (VSIZ)

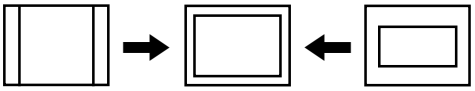

V. CENTER ADJUSTMENT (VPOS)

1.Input a cross-hatch signal.
2.Set to Service adjustment Mode.
3.Select VPOS with 1 and 4 .
4.Adjust with 3 and 6 for the best vertical center.
5.Write into the memory by pressing MUTING then ENTER

V. CENTER (VPOS)

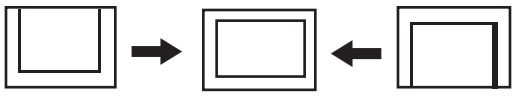

H. CENTER ADJUSTMENT (HPOS)

Note : Perform this adjustment after checking H. FREQUENCY.

1. Input a cross-hatch signal.
2. Set the Service adjustment Mode.
3. Select HPOS with 1 and 4 .
4. Adjust with 3 and 6 for the best horizontal center.
5. Write into the memory by pressing MUTING then ENTER

H. CENTER (VPOS)

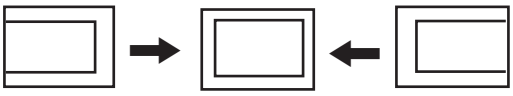

V. LINEARITY (VLIN) AND V CORRECTION

1. Input a cross-hatch signal.
2. V. Correction is automatically adjusted from the circuit and should satisfy the conditions below:

V LINEARITY (VLIN)

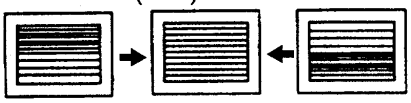

V CORRECTION

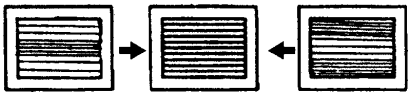

SERVICE ADJUSTMENT MODE MEMORY

1. Change DCOL to "1".
2. After completing all adjustments, press "0" then ENTER .

READ FROM MEMORY

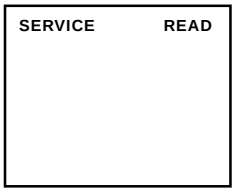

Green
0

Red
ENTER

6-2. Circuit Boards Location

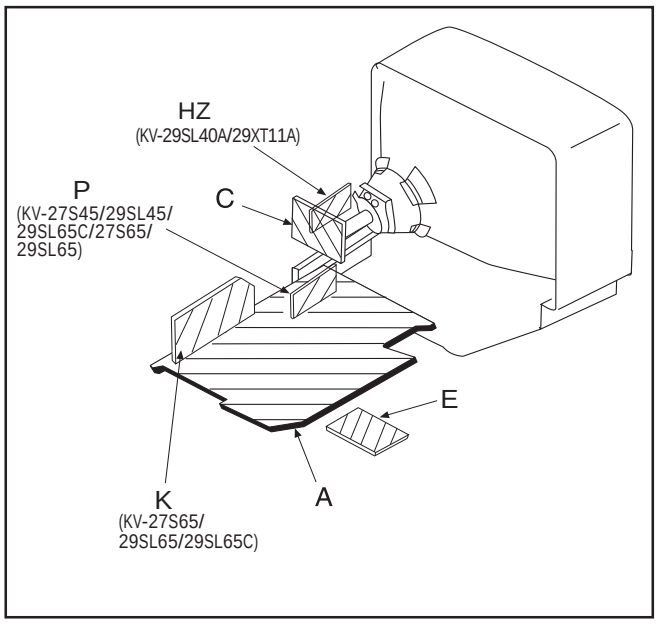

Part replaced (◪)	Adjustment (⧓)
DY, C511, C572, C573, C574, C575, D573, D574, R582, R583, R585, R586, R578, R579, T504, IC301, IC521,IC603, C507, C508, C509, C515, C520, L591, L501	HV HOLD-DOWN (R584)

IC603, IC601, R699	B+ VOLTAGE CONFIRMATION

- All voltages are in V.
- Voltage is DC with respect to ground unless otherwise noted.
- Readings are taken with a 10MΩ digital multimeter.
- Readings are taken with a color-bar signal input.
- Voltage variations may be noted due to normal production tolerance.
- Circled numbers are waveform references.

- ▬▬ : B + Line
- - - - - : B - Line
- ⇨ : signal path

6-3. Printed Wiring Boards and Schematic Diagrams

Note:
- All capacitors are in μF unless otherwise noted. pF: μμF 50WV or less are not indicated except for electrolytic and tantalums.
- All electrolytics are 50V unless otherwise specified
- Indication of resistance, which does not have one for rating electrical power, is as follows:

Pitch: 5mm Rating electrical power 1/4W

- All resistors are in ohms.
  KΩ=1000Ω, MΩ=1000KΩ
- ⊣▭⊢ nonflammable resistor.
- Δ: internal component.
- ▭: panel designation and adjustment for repair.
- All variable and adjustable resistors have characteristic curve B, unless otherwise noted.
- The components identified by ◪ in this manual have been carefully factory-selected for each set in order to satisfy regulations regarding X-ray radiation. Should replacement be required, replace only with the value originally used.
- When replacing components identified by ◪ make the necessary adjustments indicated. If results do not meet the specified value, change the component identified by ⧓ and repeat the adjustment until the specified value is achieved.
  (Refer to R584 on page 27 and 28).
- When replacing parts in the table below be sure to perform the related adjustment.

Reference Information

RESISTOR	:	RN	METAL FILM
	:	RC	SOLID
	:	FPRD	NON FLAMMABLE CARBON
	:	FUSE	NON FLAMMABLE FUSIBLE
	:	RW	NON FLAMMABLE WIREWOUND
	:	RS	NON FLAMMABLE METAL OXIDE
	:	RB	NON FLAMMABLE CEMENT
	:	※	ADJUSTMENT RESISTOR
COIL	:	LF-8L	MICRO INDUCTOR
CAPACITOR	:	TA	TANTALUM
	:	PS	STYROL
	:	PP	POLYPROPYLENE
	:	PT	MYLAR
	:	MPS	METALIZED POLYESTER
	:	MPP	METALIZED POLYPROPYLENE
	:	ALB	BIPOLAR
	:	ALT	HIGH TEMPERATURE
	:	ALR	HIGH RIPPLE

Note: The symbol ⊣▭⊢ display is on the component side.

The components identified by shading and mark ⚠ are critical for safety. Replace only with part number specified.

The symbol ⊣▭⊢ indicates fast operating fuse. Replace only with fuse of same rating as marked.

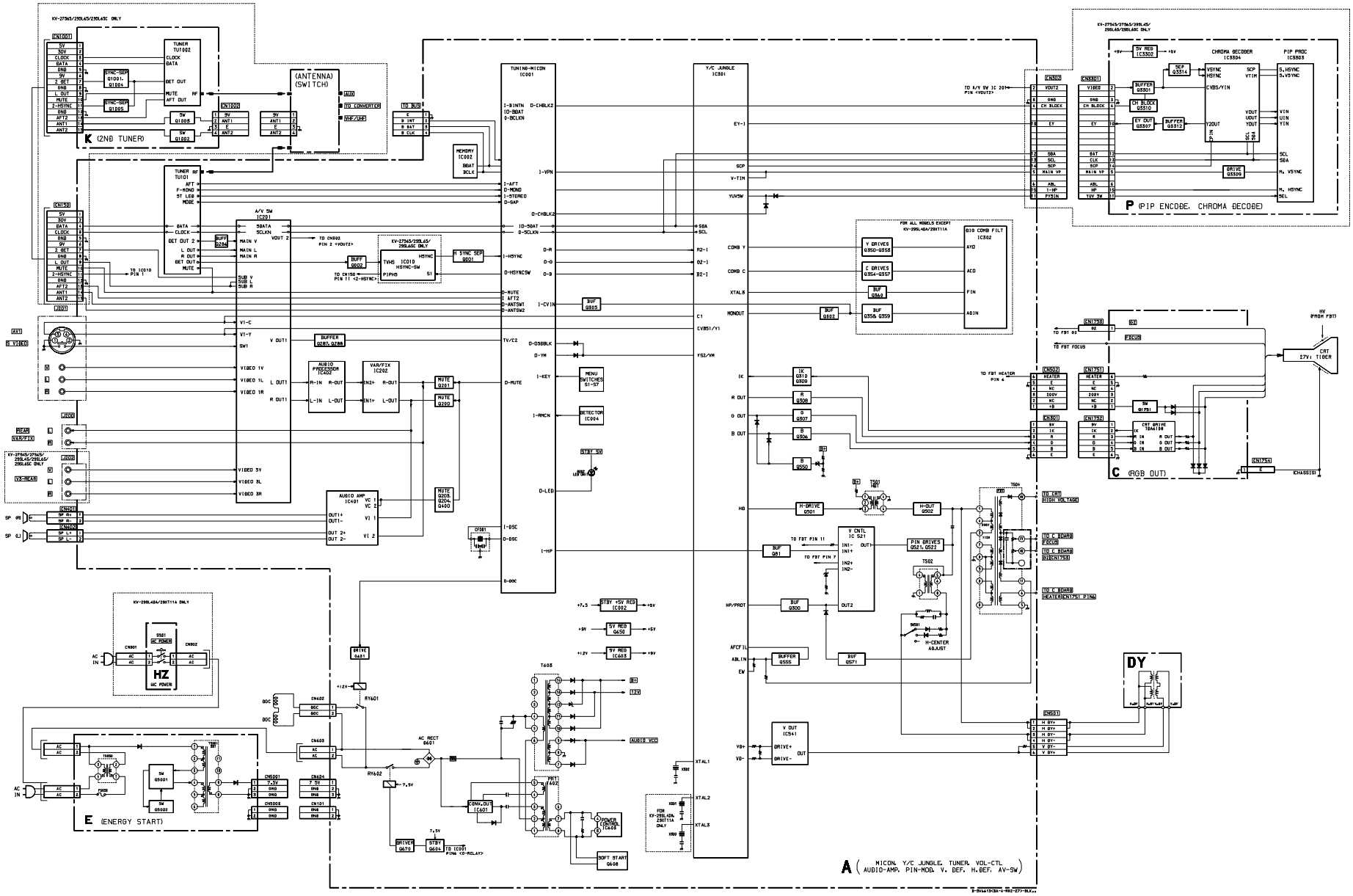
K (2ND TUNER)
P (PIP ENCODE, CHROMA DECODE)
C (RGB OUT)
E (ENERGY START)
A (MICON, Y/C JUNGLE, TUNER, VOL-CTL, AUDIO-AMP, PIN-MOD, V. DEF, H.DEF, AV-SW)
DY
(ANTENNA) (SWITCH)
TUNING-MICON IC001
Y/C JUNGLE IC301
A/V SW IC201
CHROMA DECODER IC3804
PIP PROC IC3803
CRT TUBE
H-CENTER ADJUST
POWER CONVERTER IC608
SOFT START Q608

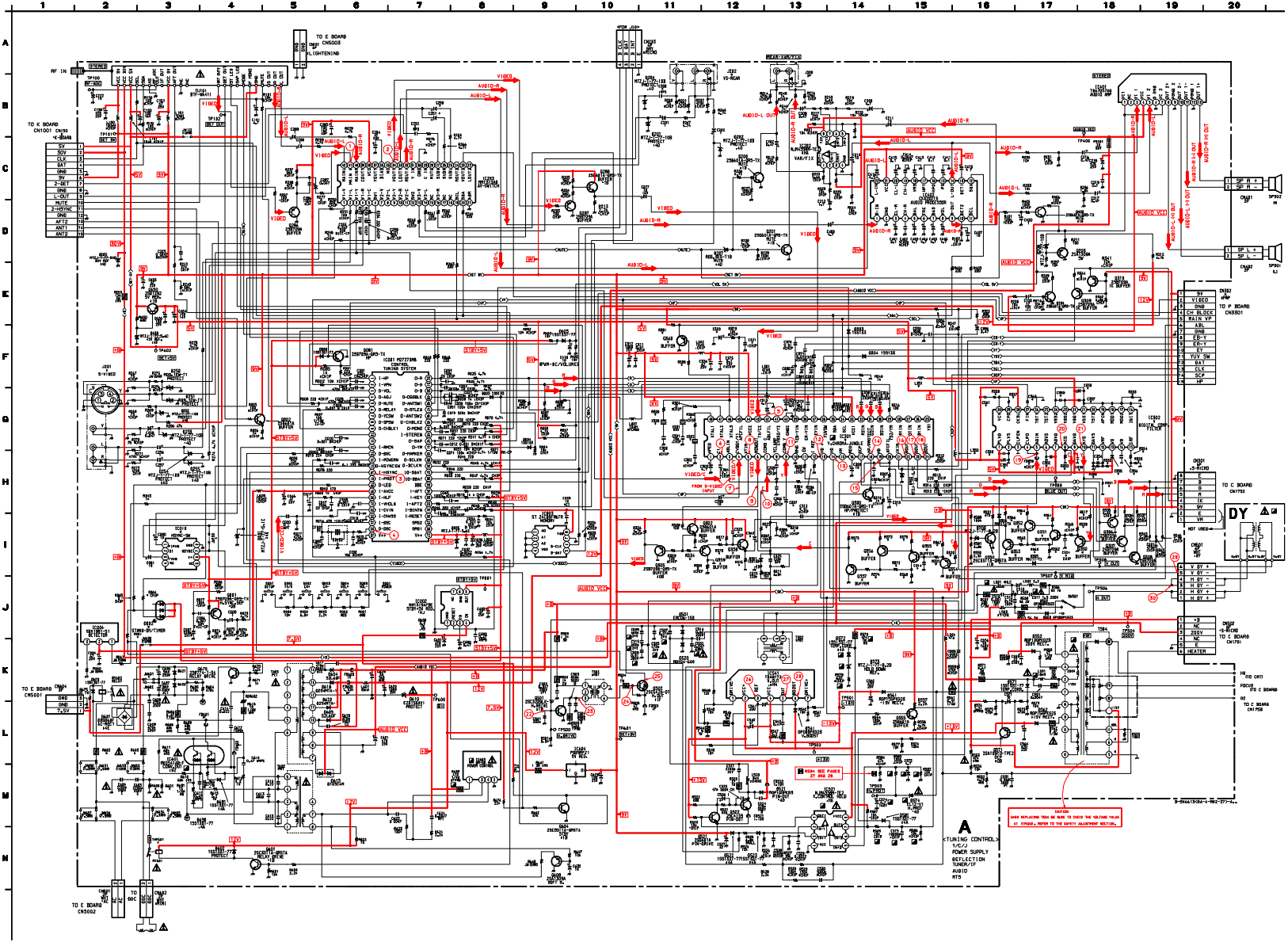
A
<TUNING CONTROL>
Y/C/J
POWER SUPPLY
DEFLECTION
TUNER/IF
AUDIO
RTS
CAUTION
MADE REPLACING TRON BE SURE TO CHECK THE VOLTAGE VALUE
AT TYPEOF, REFER TO THE SAFETY ADJUSTMENT SECTION.
TO E BOARD
CN5002
TO C BOARD
CN1752
TO P BOARD
CN5301
TO K BOARD
CN1001 CN150
<K-BOARD>
RF IN
S-VIDEO
DY
HEATER
TO C BOARD
CN1751
TO C BOARD
CN1755
TO E BOARD
CN5001
TO E BOARD
CN5002

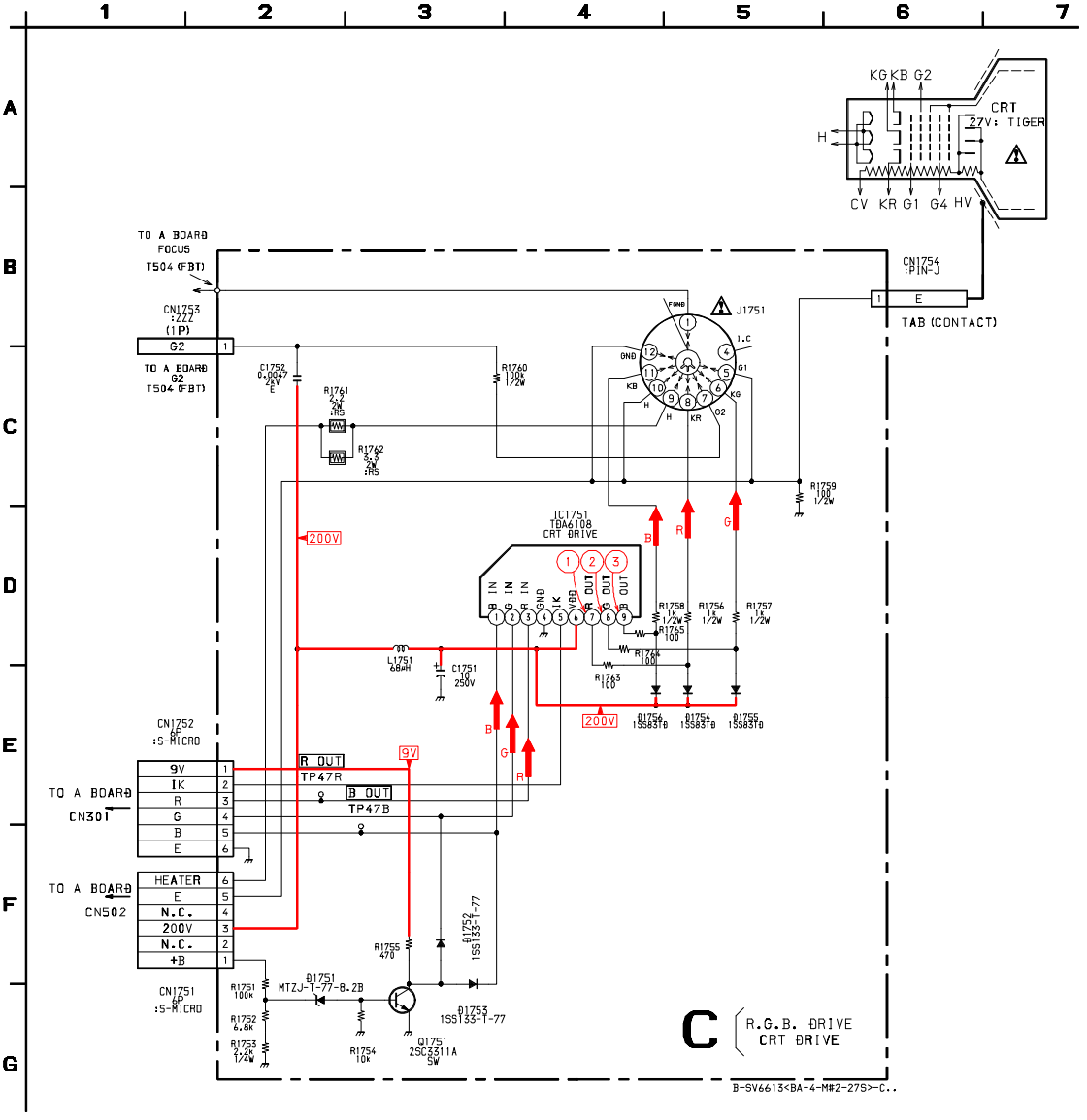
CRT
27V: TIGER
KG KB G2
H
CV KR G1 G4 HV
TO A BOARD
FOCUS
T504 (FBT)
CN1753
:ZZZ
(1P)
G2
TO A BOARD
G2
T504 (FBT)
C1752
0.0047
2kV
E
R1761
2.2
2W
:RS
R1762
2.2
2W
:RS
R1740
100k
1/2W
J1751
FGND
I.c
GND
G1
KB
KG
H
KR
G2
CN1754
:PIN-J
E
TAB (CONTACT)
R1759
100
1/2W
IC1751
TDA6108
CRT DRIVE
B IN
G IN
R IN
GND
IK
VDD
R OUT
G OUT
B OUT
R1758
1/2W
R1756
1/2W
R1757
1/2W
R1765
100
R1764
100
R1743
100
L1751
68μH
C1751
10
250V
200V
D1756
1SS83TB
D1754
1SS83TB
D1755
1SS83TB
CN1752
:S-MICRO
9V
IK
R
G
B
E
TO A BOARD
CN301
R OUT
TP47R
B OUT
TP47B
9V
TO A BOARD
CN502
HEATER
E
N.C.
200V
N.C.
+B
R1755
470
D1752
1SS133-T-77
CN1751
:S-MICRO
R1751
100k
D1751
MTZJ-T-77-8.2B
R1752
6.8k
R1753
2.2k
1/4W
R1754
10k
Q1751
2SC3311A
5W
D1753
1SS133-T-77
C
R.G.B. DRIVE
CRT DRIVE
B-SV6613<BA-4-M#2-27S>-C..

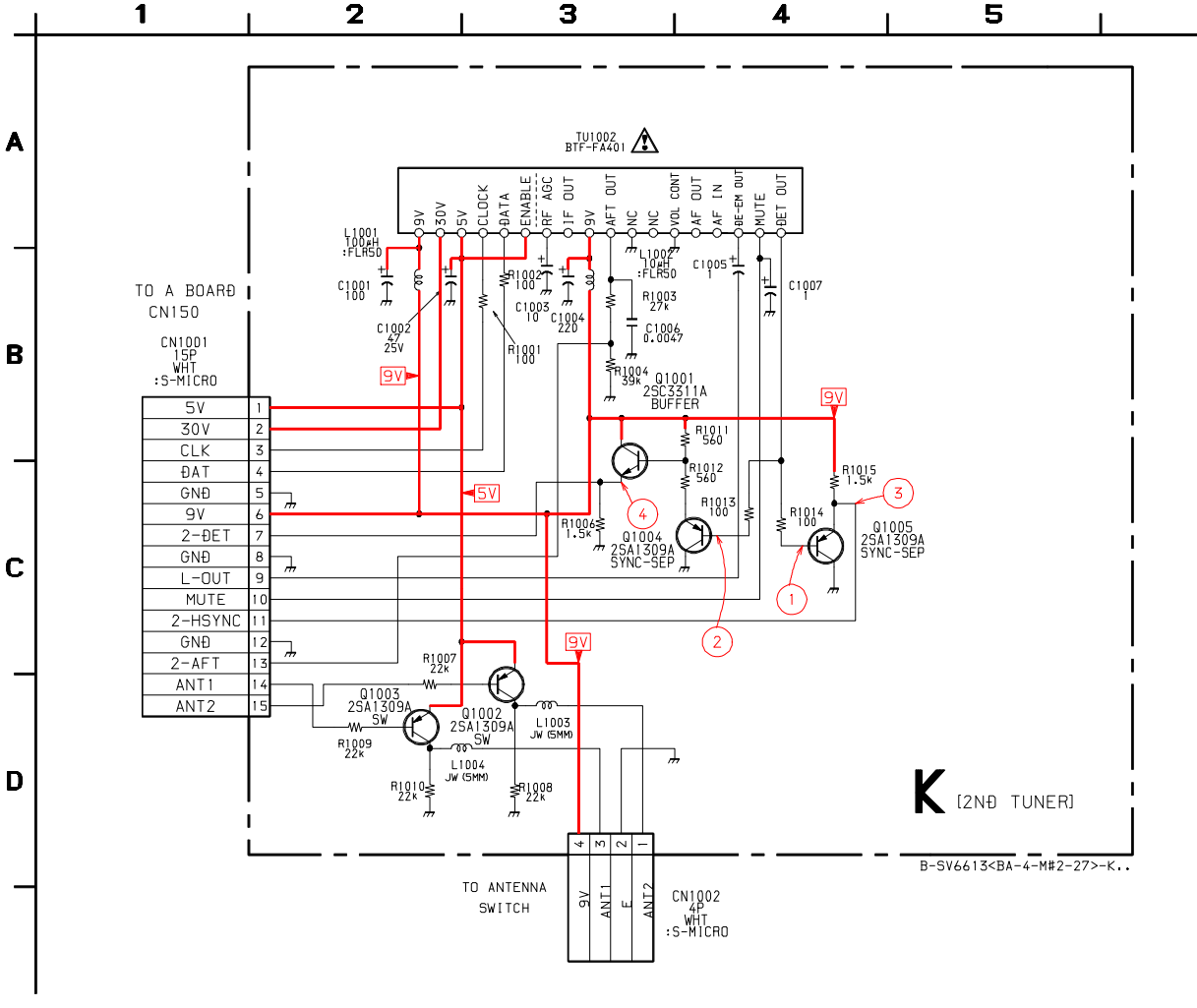
1
2
3
4
5
A
B
C
D
TU1002
BTF-FA401
9V
30V
5V
CLOCK
DATA
ENABLE
RF AGC
IF OUT
9V
AFT OUT
NC
NC
VOL CONT
AF OUT
AF IN
DE-EM OUT
MUTE
DET OUT
L1001
100uH
:FLR50
L1002
10uH
:FLR50
C1001
100
C1002
47
25V
R1002
100
C1003
10
C1004
220
R1003
27k
C1006
0.0047
C1005
1
C1007
1
R1001
100
R1004
39k
Q1001
2SC3311A
BUFFER
TO A BOARD
CN150
CN1001
15P
WHT
:S-MICRO
5V
30V
CLK
DAT
GND
9V
2-DET
GND
L-OUT
MUTE
2-HSYNC
GND
2-AFT
ANT1
ANT2
R1011
560
R1012
560
R1013
100
R1014
100
R1015
1.5k
R1006
1.5k
Q1004
2SA1309A
SYNC-SEP
Q1005
2SA1309A
SYNC-SEP
R1007
22k
Q1003
2SA1309A
SW
Q1002
2SA1309A
SW
L1003
JW (SMM)
R1009
22k
L1004
JW (SMM)
R1010
22k
R1008
22k
K [2ND TUNER]
B-SV6613<BA-4-M#2-27>-K..
TO ANTENNA
SWITCH
CN1002
4P
WHT
:S-MICRO
9V
ANT1
E
ANT2

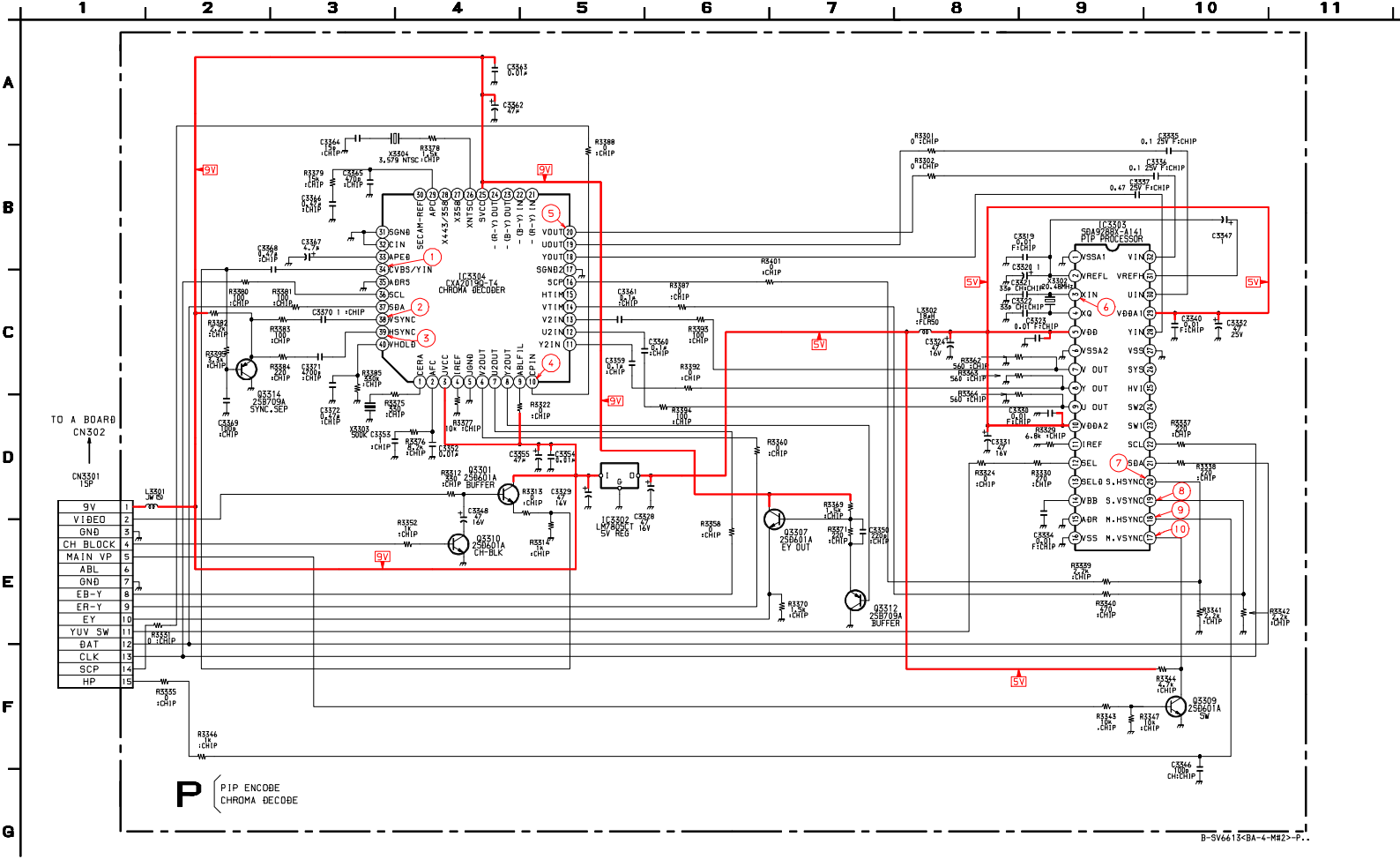
IC3304
CXA2011BQ-T4
CHROMA DECODER
IC3303
SDA9288X-A141
PIP PROCESSOR
IC3302
LM78L05CT
5V REG
Q3301
2SB601A
BUFFER
Q3310
2SB601A
CH-BLK
Q3307
2SB601A
EY OUT
Q3312
2SB709A
BUFFER
Q3314
2SB709A
SYNC.SEP
Q3309
2SB601A
SW
X3504
3.579 NTSC
TO A BOARD
CN302
CN3301
15P
9V
5V
P
PIP ENCODE
CHROMA DECODE
B-SV6613<BA-4-M82>-P..

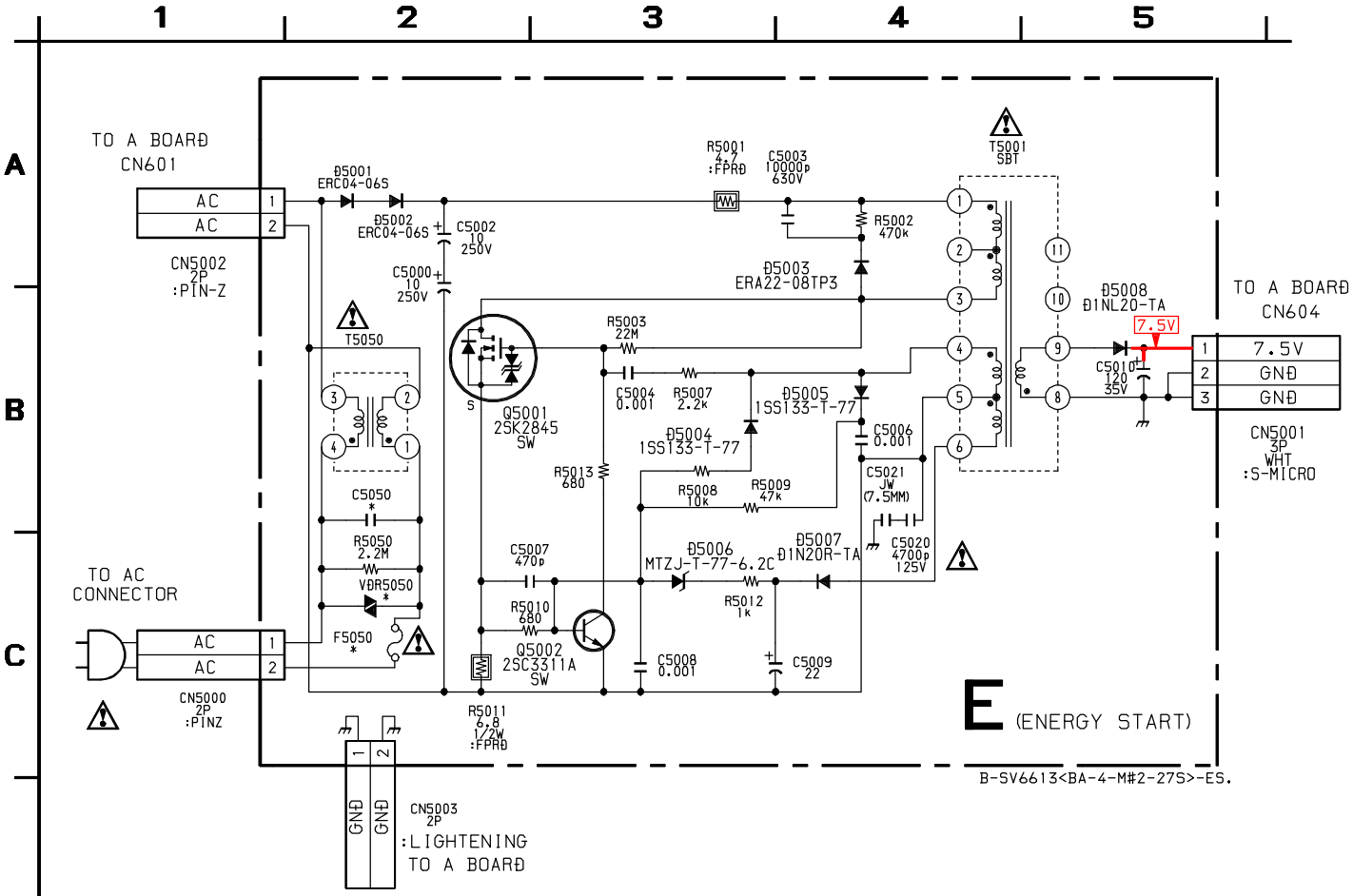
1
2
3
4
5
A
B
C
TO A BOARD
CN601
AC
AC
CN5002
2P
:PIN-Z
D5001
ERC04-06S
D5002
ERC04-06S
C5002
10
250V
C5000
10
250V
R5001
4.7
:FPRD
C5003
10000p
630V
R5002
470k
D5003
ERA22-08TP3
T5001
SBT
D5008
D1NL20-TA
7.5V
C5010
120
35V
TO A BOARD
CN604
7.5V
GND
GND
CN5001
3P
WHT
:S-MICRO
T5050
R5003
22M
C5004
0.001
R5007
2.2k
Q5001
2SK2845
SW
S
D5005
1SS133-T-77
D5004
1SS133-T-77
C5006
0.001
R5013
680
R5008
10k
R5009
47k
C5021
JW
(7.5MM)
C5020
4700p
125V
C5050
*
R5050
2.2M
VDR5050
*
F5050
*
C5007
470p
D5006
MTZJ-T-77-6.2C
D5007
D1N20R-TA
R5012
1k
R5010
680
Q5002
2SC3311A
SW
C5008
0.001
C5009
22
R5011
6.8
1/2W
:FPRD
TO AC
CONNECTOR
AC
AC
CN5000
2P
:PINZ
E
(ENERGY START)
B-SV6613<BA-4-M#2-27S>-ES.
GND
GND
CN5003
2P
:LIGHTENING
TO A BOARD

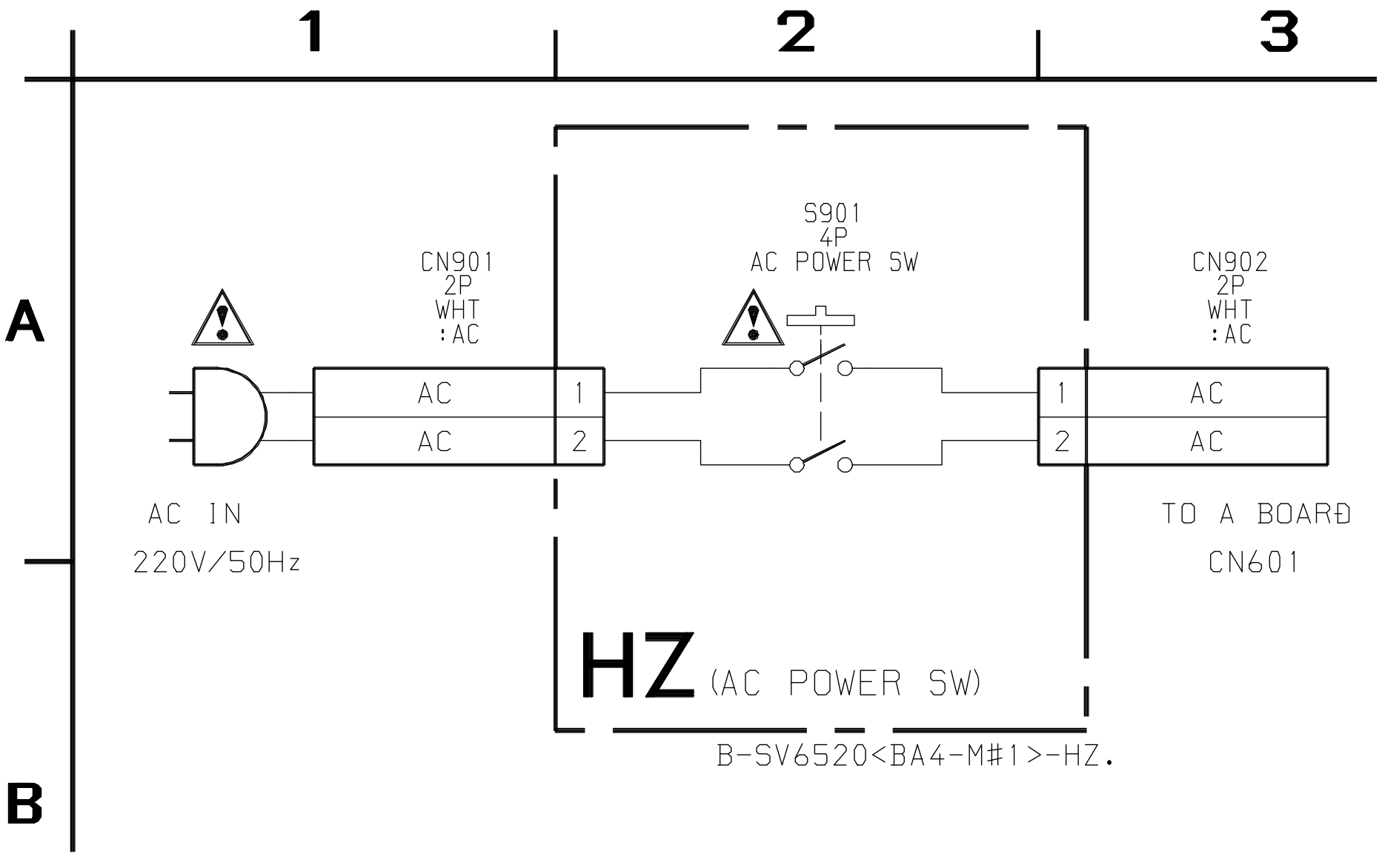
1
2
3
A
B
CN901
2P
WHT
:AC
AC
AC
1
2
AC IN
220V/50Hz
S901
4P
AC POWER SW
CN902
2P
WHT
:AC
1
2
AC
AC
TO A BOARD
CN601
HZ (AC POWER SW)
B-SV6520<BA4-M#1>-HZ.

6-4. SEMICONDUCTORS

2SA1162-G
2SD601A-Q
2SA1037A-T146-R

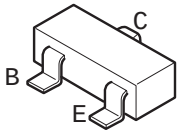

2SA1175-HFE
2SC2785-HFE
2SA933AS-QRT

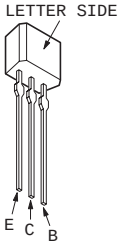

2SC3209LK
2SD1312-K
2SD774-34

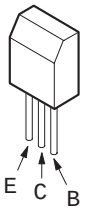

2SC4159-E

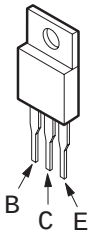

2SK2845-LB102

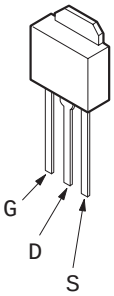

2SC5426-01

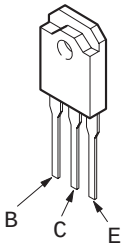

RD9.1EW

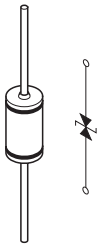

MA111

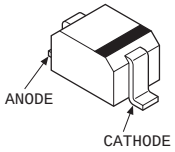

D3SB60F

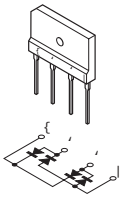

D10SC4M

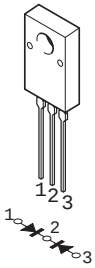

D2S4MF

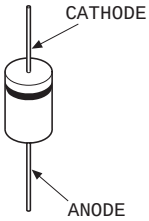

MX0541B-F

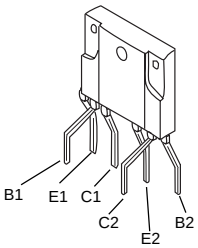

D1N20R
RD6.2ESB2
RD8.23SB2
MTZJ-5.1C
RD5.6ESB2
RD10ESB2
MTZJ-30D
RD3.3ESB2

U05G
D1NL40-TA2
ERA22-08TP3
LNK0120022G
1SS133T-77
ERC06-15S
MDV04-600
S2L60F
EZ0150AV1

D1NL20-TA
EGP20G
EL1Z
1SS83

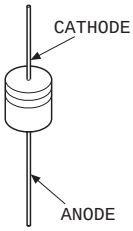

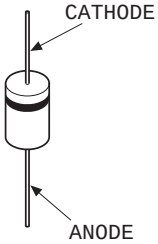

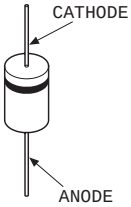

SECTION 7
EXPLODED VIEWS

• Items with no part number and no description are not stocked because they are seldom required for routine service

• The component parts of an assembly are indicated by the reference numbers in the remarks column.

• Items marked " * " are not stocked since they are seldom required for routine service. Some delay should be anticipated when ordering these items.

Note:

The components identified with gray shading and a critical symbol (⚠) are critical for safety. Replace only with part number specified.

Note:

Les composants identifies per un trame et une marque ⚠ sont critiques pout la securite. Ne les remplacer que par une piece portant le numero specifie.

7-1. CHASSIS (KV-27S40/27S45/29SL40/29XL40M/29XL40P/29XT11A/29SL40A/29SL40C/29SL45)

■ 7-685-663-79 SCREW +BVTP 4X16

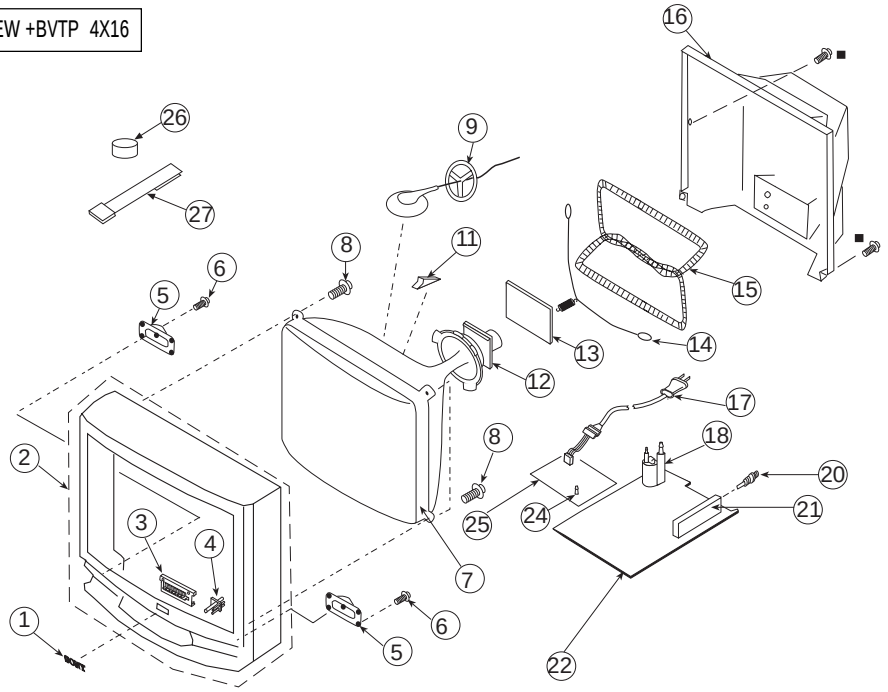

REF.NO.	PART NO.	DESCRIPTION	REMARK
1	4-046-160-11	EMBLEM (NO.9)	
2	X-4035-815-1	BEZNET ASSY (KV-27S40/29SL40/29SL40C)	3,4
2	X-4035-816-1	BEZNET ASSY (KV-27S45/29SL45)	3,4
2	X-4035-818-1	BEZNET ASSY (KV-29XL40M/29XL40P)	3,4
2	X-4035-819-1	BEZNET ASSY (KV-29SL40A)	3,4
2	X-4035-820-1	BEZNET ASSY (KV-29XT11A)	3,4
3	4-063-573-01	BUTTON, MULTI	
4	4-063-570-01	GUIDE,LED (EXCEPT KV-29XT11A/29SL40A)	
4	4-063-570-11	GUIDE,LED (KV-29XT11A/29SL40A ONLY)	
5	1-504-531-11	SPEAKER (13.1 x 6.2CM)	
6	4-388-477-01	SCREW (3 x 16), TAPPING, WASHER	
7 ⚠	8-733-873-05	CRT29NX (KV-27S45/27S40/29SL40/ 29XL40M/29XL40P/29SL45)	
7 ⚠	8-733-874-05	CRT29NX(KV-29XT11A/29SL40C/29SL40A)	
8	4-041-268-01	SCREW (7) TAPPING	
9	3-704-372-31	HOLDER, HV	
11	4-053-005-01	SPACER, DY	
12 ⚠	8-451-486-11	DYY29 NXA-V	
13 *	A-1331-775-A	C BOARD, COMPLETE	
14	4-036-329-01	SPRING (B), TENSION	
15 ⚠	1-416-588-11	COIL, DEMAGNETIC (EXCEPT KV-29XT11A/29SL40C/29SL40A)	
15 ⚠	1-416-589-21	COIL, DEMAGNETIC (KV-29XT11A/29SL40C/29SL40A)	

REF.NO.	PART NO.	DESCRIPTION	REMARK
16 *	4-063-572-41	COVER, REAR (KV-27S40/29SL40/29XL40M/ 29XL40P/29XT11A/29SL40C/29SL40A)	
16 *	4-063-572-31	COVER, REAR (KV-27S45/29SL45)	
17 ⚠	1-751-057-21	CORD, POWER (KV-27S45/27S40/29SL45/29SL40/ 29XL40M/29XL40P)	
17 ⚠	1-769-796-71	CORD, POWER (KV-29SL40C)	
17 ⚠	1-783-838-41	CORD, POWER (KV-29XT11A/29SL40A)	
18 ⚠	1-453-268-11	TRANSFORMER ASSY, FLYBACK NX-4005//X4J4	
19	4-064-646-01	CLIP, CHASSIS	
20	1-766-374-11	PLUG,F-PIN	
21 ⚠	8-598-431-00	TUNER FSS BTF-WA411	
22 *	A-1298-484-A	A BOARD, COMPLETE (KV-27S40/29SL40/29XL40M/29XL40P)	
22 *	A-1298-543-A	A BOARD, COMPLETE (KV-29XT11A/29SL40A)	
22 *	A-1298-542-A	A BOARD, COMPLETE (KV-29SL40C)	
22 *	A-1298-483-A	A BOARD, COMPLETE (KV-27S45/29SL45)	
23 *	A-1190-306-A	P BOARD, COMPLETE (KV-27S45/29SL45 only)	
24 *	3-703-353-05	SUPPORT, PC BOARD	
25 *	A-1343-525-A	E BOARD, COMPLETE (EXCEPT KV-29XT11A/29SL40C/29SL40A)	
25 *	A-1343-526-A	E BOARD, COMPLETE (KV-29XT11A/29SL40C/29SL40A)	
26	1-452-032-00	MAGNET, DISC	
27	4-062-047-01	PIECE A (110)	

• Items with no part number and no description are not stocked because they are seldom required for routine service

• The component parts of an assembly are indicated by the reference numbers in the remarks column.

• Items marked " * " are not stocked since they are seldom required for routine service. Some delay should be anticipated when ordering these items.

Note:

The components identified with gray shading and a critical symbol (⚠) are critical for safety. Replace only with part number specified.

Note:

Les composants identifies per un trame et une marque ⚠ sont critiques pout la securite. Ne les remplacer que par une piece portant le numero specifie.

7-2. CHASSIS (KV-27S65/29SL65/29SL65C)

■ 7-685-663-79 SCREW +BVTP 4X16

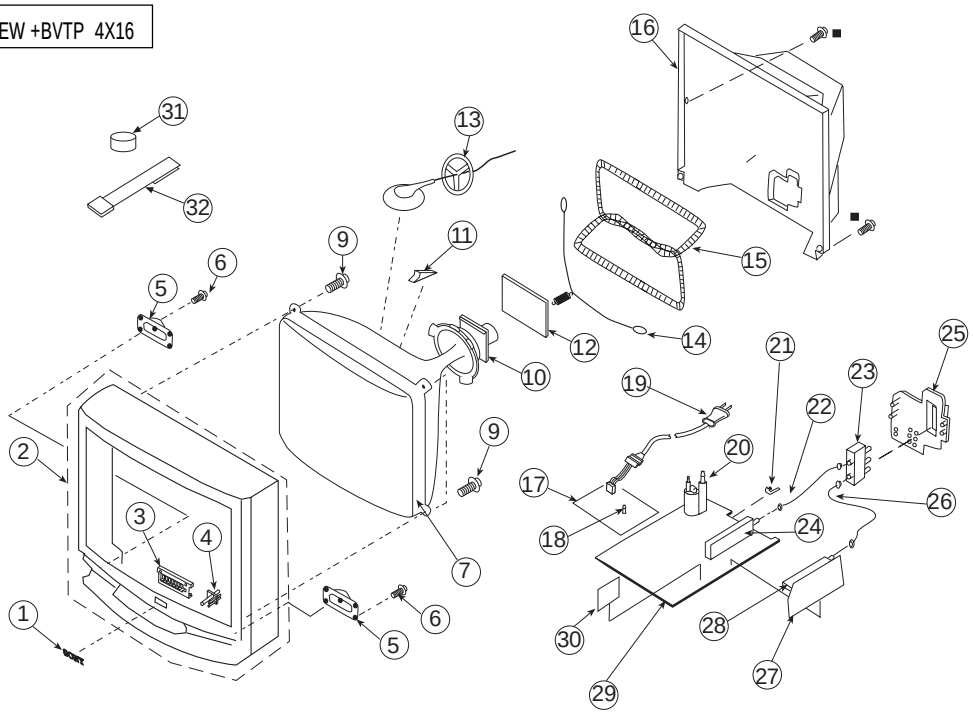

REF.NO.	PART NO.	DESCRIPTION	REMARK
1	4-046-160-11	EMBLEM (NO.9)	
2	X-4035-817-1	BEZNET ASSY	3,4
3	4-063-573-01	BUTTON, MULTI	
4	4-063-570-01	GUIDE,LED	
5	43504-531-11	SPEAKER (13.1X6.2CM)	
6	4-388-477-01	SCREW (3X16),TAPPING,WASHER	
7 ⚠	8-733-873-05	CRT29NX (KV-27S65/29SL65)	
7 ⚠	8-733-874-05	CRT29 NX (KV-29SL65C)	
9	4-041-268-01	SCREW (7), TAPPING	
10	8-451-486-11	DY-Y29 NXA-V (KV-27S65/29SL65)	
10	8-451-486-21	DY-Y29 NXA-V2 (KV-29SL65C)	
11	4-053-005-01	SPACER, DY	
12 *	A-1331-775-A	C BOARD, COMPLETE	
13	3-704-372-31	HOLDER, HV	
14	4-036-329-01	SPRING (B), TENSION	
15 ⚠	1-416-588-11	COIL, DEMAGNETIC (KV-27S65/29SL65)	
15 ⚠	1-416-589-21	COIL, DEMAGNETIC (KV-29SL65C)	
16 *	4-063-572-21	COVER, REAR	
17 *	A-1343-525-A	E BOARD, COMPLETE (KV-27S65/29SL65)	
17 *	A-1343-526-A	E BOARD, COMPLETE (KV-29SL65C)	
18 *	3-703-353-05	SUPPORT, PC BOARD	
19 ⚠	1-751-057-21	CORD, POWER (KV-27S65/29SL65)	
19 ⚠	1-769-796-71	CORD, POWER (KV-29SL65C)	

REF.NO.	PART NO.	DESCRIPTION	REMARK
20 ⚠	1-453-268-11	TRANSFORMER ASSY, FLYBACK NX-4005//X4J4	
21	4-064-646-01	CLIP, CHASSIS	
22	1-783-800-11	CABLE, PIN	
23	8-598-414-00	ANTENNA SWITCH (KV-29SL65/29SL65C)	
24 ⚠	8-598-431-00	TUNER FSS BTF-WA411	
25 *	4-064-176-01	BRACKET, ANTENNA	
26	1-557-056-31	CABLE, P-P	
27 *	A-1380-579-A	K BOARD, COMPLETE	
28 ⚠	8-598-430-00	TUNER FSS BTF-FA401	
29 *	A-1298-485-A	A BOARD, COMPLETE (KV-29SL65C)	
29 *	A-1298-541-A	A BOARD, COMPLETE (KV-27S65/29SL65)	
30 *	A-1190-306-A	P BOARD, COMPLETE (KV-29SL65/29SL65C)	
31	1-452-032-00	MAGNET, DISC	
32	4-062-047-01	PIECE A (110)	

• Items with no part number and no description are not stocked because they are seldom required for routine service

• The component parts of an assembly are indicated by the reference numbers in the remarks column.

• Items marked " * " are not stocked since they are seldom required for routine service. Some delay should be anticipated when ordering these items.

Note:

The components identified with gray shading and a critical symbol (⚠) are critical for safety. Replace only with part number specified.

Note:

Les composants identifies per un trame et une marque ⚠ sont critiques pout la securite. Ne les remplacer que par une piece portant le numero specifie.

7-3. MAIN POWER SWITCH (KV-29SL40A/29XT11A ONLY)

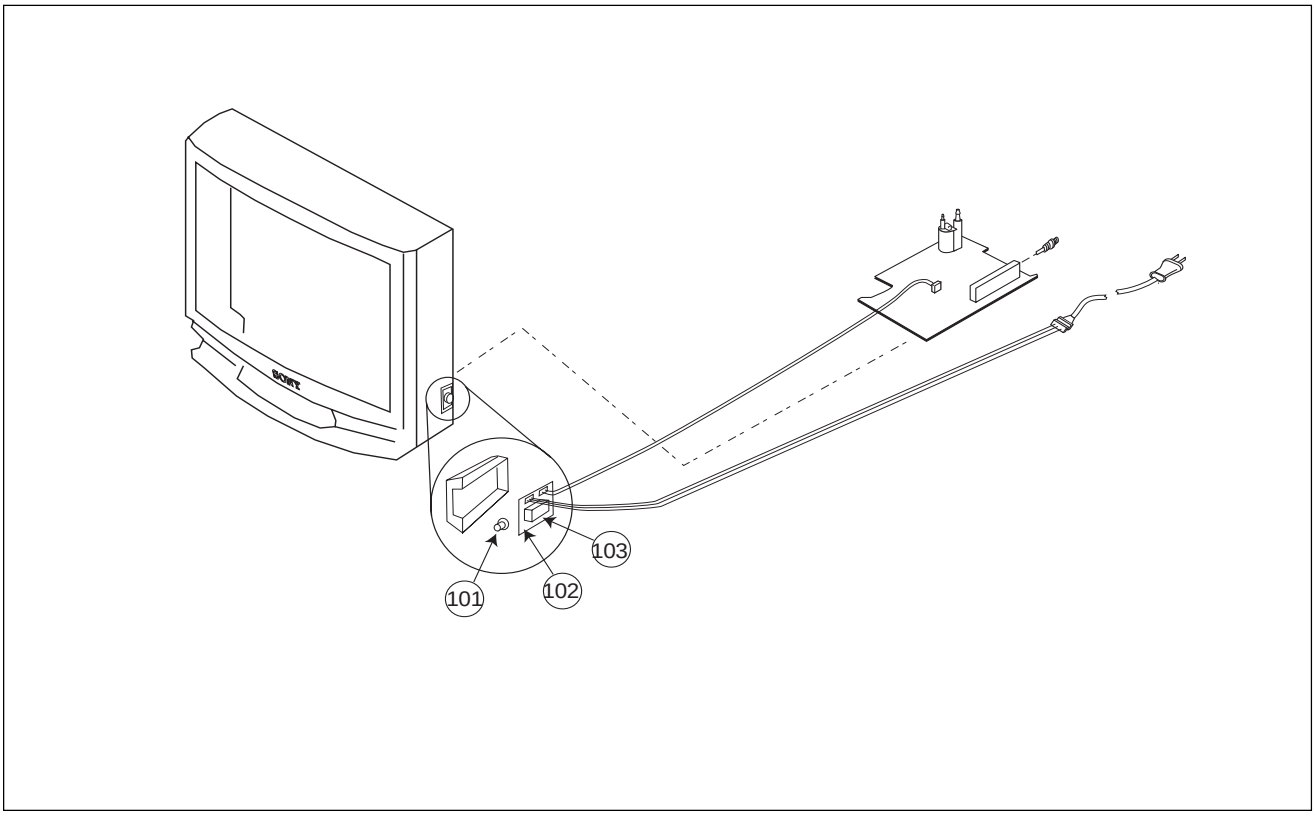

REF.NO.	PART NO.	DESCRIPTION	REMARK
101	4-052-635-01	BUTTON, MAIN POWER	
102 *	A-1372-117-A	MOUNTED PCB, HZ	
103 ⚠	4-064-265-01	SWITCH, MAIN	

SECTION 8
ELECTRICAL PARTS LIST

PARTS LISTING TABLE OF CONTENTS

Refer to the designated variant parts list when seeking a part indicated by an asterisk (*) on the A board schematic or by the word "variant" on the common parts list.

SECTION 8
ELECTRICAL PARTS LIST

Note:

The components identified by shading and mark ⚠ are critical for safety. Replace only with part number specified.

Note:

Les composants identifies per un trame et une marque ⚠ sont critiques pour la securite. Ne les remplacer que par une piece portant le numero specifie.

The components identified by ⧗ in this manual have been carefully factory-selected for each set in order to satisfy regulations regarding X-ray radiation. Should replacement be required, replace only with the value originally used.

- Items marked " * " are not stocked since they are seldom required for routine service. Some delay should be anticipated when ordering these items.
- All variable and adjustable resistors have characteristic curve B, unless otherwise noted.

RESISTORS
- All resistors are in ohms
- F : nonflammable

CAPACITORS
- MF = µF

INDUCTORS
- UH = µH, MMH = mH

When indicating parts by reference number, please include the board name.

REF.NO.	PART NO.	DESCRIPTION			REMARK

A

*** A-1298-484-A A BOARD, COMPLETE (KV-27S40/29XL40M/29XL40P/29SL40)**
*** A-1298-485-A A BOARD, COMPLETE (KV-29SL65C)**
*** A-1298-483-A A BOARD, COMPLETE (KV-27S45/29SL45)**
*** A-1298-541-A A BOARD, COMPLETE (KV-27S65/29SL65)**
*** A-1298-542-A A BOARD, COMPLETE (KV-29SL40C)**
*** A-1298-543-A A BOARD, COMPLETE (KV-29XT11A/29SL40A)**

	4-382-854-01	SCREW (M3X8), P, SW (+)			
	4-382-854-11	SCREW (M3X10), P, SW (+)			

CAPACITOR

C001	1-163-259-91	CERAMIC CHIP	220PF	5%	50V
C004	1-107-701-11	ELECT	47MF	20%	25V
C005	1-126-960-11	ELECT	1MF	20%	50V
C006	1-163-035-00	CERAMIC CHIP	0.047MF		50V
C007	1-163-259-91	CERAMIC CHIP	220PF	5%	50V
C008	1-163-009-11	CERAMIC CHIP	0.001MF	10%	50V
C010	1-163-009-11	CERAMIC CHIP	0.001MF	10%	50V
C011	1-163-009-11	CERAMIC CHIP	0.001MF	10%	50V
C012	1-163-009-11	CERAMIC CHIP	0.001MF	10%	50V
C014	1-164-004-11	CERAMIC CHIP	0.1MF	10%	25V
C017	1-126-960-11	ELECT	1MF	20%	50V
C019	1-163-135-00	CERAMIC CHIP	560PF	5%	50V
C020	1-130-495-00	FILM	0.1MF	5%	50V
C021	1-163-259-91	CERAMIC CHIP	220PF	5%	50V
C028	1-163-005-11	CERAMIC CHIP	470PF	10%	50V
C030	1-163-259-91	CERAMIC CHIP	220PF	5%	50V
C034	1-163-037-11	CERAMIC CHIP	0.022MF	10%	50V
C037	1-164-161-11	CERAMIC CHIP	0.0022MF	10%	50V
C038	1-126-941-11	ELECT	470MF	20%	25V
C039	1-126-964-11	ELECT	10MF	20%	50V
C046	1-104-664-11	ELECT	47MF	20%	25V
C047	1-163-259-91	CERAMIC CHIP	220PF	5%	50V
C048	1-163-009-11	CERAMIC CHIP	0.001MF	10%	50V
C050	1-163-251-11	CERAMIC CHIP	100PF	5%	50V
C051	1-163-251-11	CERAMIC CHIP	100PF	5%	50V
C052	1-163-251-11	CERAMIC CHIP	100PF	5%	50V
C053	1-163-251-11	CERAMIC CHIP	100PF	5%	50V
C060	1-163-005-11	CERAMIC CHIP	470PF	10%	50V
C062	1-164-161-11	CERAMIC CHIP	0.0022MF	10%	50V
C065	1-163-009-11	CERAMIC CHIP	0.001MF	10%	50V
C070	1-163-259-91	CERAMIC CHIP	220PF	5%	50V
C074	1-163-251-11	CERAMIC CHIP	100PF	5%	50V
C080	1-126-964-11	ELECT	10MF	20%	50V
C081	1-126-964-11	ELECT	10MF	20%	50V
C091	1-163-231-11	CERAMIC CHIP	15PF	5%	50V
C092	1-163-231-11	CERAMIC CHIP	15PF	5%	50V
C101	1-126-963-11	ELECT	4.7MF	20%	50V
C102	1-126-382-11	ELECT	100MF	20%	16V
C150	1-126-941-11	ELECT	470MF	20%	25V
C151	1-104-664-11	ELECT	47MF	20%	25V
C200		VARIANT (SEE VARIANT PARTS LIST)			
C201	1-126-960-11	ELECT	1MF	20%	50V
C202	1-126-960-11	ELECT	1MF	20%	50V
C207	1-126-959-11	ELECT	0.47MF	20%	50V
C208	1-126-959-11	ELECT	0.47MF	20%	50V
C209	1-126-963-11	ELECT	4.7MF	20%	50V
C211	1-126-964-11	ELECT	10MF	20%	50V
C212	1-126-963-11	ELECT	4.7MF	20%	50V
C213	1-126-964-11	ELECT	10MF	20%	50V
C216	1-126-959-11	ELECT	0.47MF	20%	50V
C217	1-126-959-11	ELECT	0.47MF	20%	50V
C218	1-126-941-11	ELECT	470MF	20%	25V
C219	1-130-495-00	FILM	0.1MF	5%	50V
C222	1-126-964-11	ELECT	10MF	20%	50V
C223	1-104-664-11	ELECT	47MF	20%	25V
C225	1-163-017-00	CERAMIC CHIP	0.0047MF	10%	50V
C250		VARIANT (SEE VARIANT PARTS LIST)			
C251		VARIANT (SEE VARIANT PARTS LIST)			
C252		VARIANT (SEE VARIANT PARTS LIST)			
C255	1-104-760-11	CERAMIC CHIP	0.047MF	10%	50V
C256	1-126-960-11	ELECT	1MF	20%	50V
C257	1-126-960-11	ELECT	1MF	20%	50V
C258	1-136-161-00	FILM	0.047MF	5%	50V

A COMMON PARTS LISTING

Note:

The components identified with shading and a critical symbol (⚠) are critical for safety. Replace only with part number specified.

Note:

Les composants identifies per un trame et une marque ⚠ sont critiques pout la securite. Ne les remplacer que par une piece portant le numero specifie.

REF.NO.	PART NO.	DESCRIPTION			REMARK
C259	1-164-232-11	CERAMIC CHIP	0.01MF	10%	50V
C284	1-104-664-11	ELECT	47MF	20%	25V
C285	1-126-235-11	ELECT	100MF	20%	16V
C286	1-163-251-11	CERAMIC CHIP	100PF	5%	50V
C287	1-136-161-00	FILM	0.047MF	5%	50V
C288	1-126-960-11	ELECT	1MF	20%	50V
C289	1-126-960-11	ELECT	1MF	20%	50V
C300		VARIANT (SEE VARIANT PARTS LIST)			
C301	1-163-099-00	CERAMIC CHIP	18PF	5%	50V
C302		VARIANT (SEE VARIANT PARTS LIST)			
C303	1-126-963-11	ELECT	4.7MF	20%	50V
C304	1-163-038-91	CERAMIC CHIP	0.1MF		25V
C305	1-164-004-11	CERAMIC CHIP	0.1MF	10%	25V
C306	1-164-004-11	CERAMIC CHIP	0.1MF	10%	25V
C307		VARIANT (SEE VARIANT PARTS LIST)			
C308	1-126-964-11	ELECT	10MF	20%	50V
C309		VARIANT (SEE VARIANT PARTS LIST)			
C310	1-126-960-11	ELECT	1MF	20%	50V
C311	1-164-232-11	CERAMIC CHIP	0.01MF	10%	50V
C312	1-126-942-61	ELECT	1000MF	20%	25V
C313	1-164-232-11	CERAMIC CHIP	0.01MF	10%	50V
C314		VARIANT (SEE VARIANT PARTS LIST)			
C315	1-102-244-00	CERAMIC	220PF	10%	500V
C316	1-164-232-11	CERAMIC CHIP	0.01MF	10%	50V
C317	1-164-232-11	CERAMIC CHIP	0.01MF	10%	50V
C318	1-164-232-11	CERAMIC CHIP	0.01MF	10%	50V
C319	1-126-963-11	ELECT	4.7MF	20%	50V
C320		VARIANT (SEE VARIANT PARTS LIST)			
C321		VARIANT (SEE VARIANT PARTS LIST)			
C323		VARIANT (SEE VARIANT PARTS LIST)			
C324		VARIANT (SEE VARIANT PARTS LIST)			
C325	1-102-110-00	CERAMIC	220PF	10%	50V
C330	1-163-003-11	CERAMIC CHIP	330PF	10%	50V
C331	1-163-005-11	CERAMIC CHIP	470PF	10%	50V
C350		VARIANT (SEE VARIANT PARTS LIST)			
C351		VARIANT (SEE VARIANT PARTS LIST)			
C352		VARIANT (SEE VARIANT PARTS LIST)			
C353		VARIANT (SEE VARIANT PARTS LIST)			
C354		VARIANT (SEE VARIANT PARTS LIST)			
C355		VARIANT (SEE VARIANT PARTS LIST)			
C356		VARIANT (SEE VARIANT PARTS LIST)			
C357		VARIANT (SEE VARIANT PARTS LIST)			
C358		VARIANT (SEE VARIANT PARTS LIST)			
C359		VARIANT (SEE VARIANT PARTS LIST)			
C360		VARIANT (SEE VARIANT PARTS LIST)			
C361		VARIANT (SEE VARIANT PARTS LIST)			
C362		VARIANT (SEE VARIANT PARTS LIST)			
C370	1-164-232-11	CERAMIC CHIP	0.01MF	10%	50V
C371	1-164-232-11	CERAMIC CHIP	0.01MF	10%	50V

REF.NO.	PART NO.	DESCRIPTION			REMARK
C372	1-164-232-11	CERAMIC CHIP	0.01MF	10%	50V
C373	1-163-038-91	CERAMIC CHIP	0.1MF		25V
C374	1-126-935-11	ELECT	470MF	20%	16V
C375	1-163-038-91	CERAMIC CHIP	0.1MF		25V
C376	1-104-664-11	ELECT	47MF	20%	25V
C377	1-126-964-11	ELECT	10MF	20%	50V
C380		VARIANT (SEE VARIANT PARTS LIST)			
C381		VARIANT (SEE VARIANT PARTS LIST)			
C382		VARIANT (SEE VARIANT PARTS LIST)			
C390	1-126-959-11	ELECT	0.47MF	20%	50V
C399	1-126-964-11	ELECT	10MF	20%	50V
C400	1-126-963-11	ELECT	4.7MF	20%	50V
C401	1-126-956-91	ELECT	0.1MF	20%	50V
C402	1-163-017-00	CERAMIC CHIP	0.0047MF	10%	50V
C403	1-126-963-11	ELECT	4.7MF	20%	50V
C404	1-126-963-11	ELECT	4.7MF	20%	50V
C405	1-126-963-11	ELECT	4.7MF	20%	50V
C406	1-126-963-11	ELECT	4.7MF	20%	50V
C407	1-126-964-11	ELECT	10MF	20%	50V
C410	1-126-963-11	ELECT	4.7MF	20%	50V
C411	1-126-956-91	ELECT	0.1MF	20%	50V
C412	1-130-495-00	FILM	0.1MF	5%	50V
C413	1-126-967-11	ELECT	47MF	20%	50V
C414	1-163-017-00	CERAMIC CHIP	0.0047MF	10%	50V
C415	1-126-956-91	ELECT	0.1MF	20%	50V
C416	1-126-963-11	ELECT	4.7MF	20%	50V
C418	1-126-964-11	ELECT	10MF	20%	50V
C420	1-126-960-11	ELECT	1MF	20%	50V
C501	1-102-112-00	CERAMIC	330PF	10%	50V
C502	1-106-383-00	MYLAR	0.047MF	10%	200V
C503	1-102-212-00	CERAMIC	820PF	10%	500V
C504	1-102-002-00	CERAMIC	680PF	10%	500V
C505 ⚠	1-162-134-11	CERAMIC	470PF	10%	2KV
C507 ⚠	1-119-969-11	MYLAR	14000PF	3%	2KV
C508 ⚠	1-107-364-11	MYLAR	0.01MF	10%	200V
C509 ⚠	1-162-116-00	CERAMIC	680PF	10%	2KV
C510	1-107-649-11	ELECT	2.2MF	20%	250V
C511 ⚠	1-117-673-11	FILM	1.5MF	5%	200V
C512	1-106-395-00	MYLAR	0.15MF	10%	200V
C513	1-106-343-00	MYLAR	0.001MF	10%	100V
C514	1-117-891-11	FILM	0.62MF	5%	200V
C515 ⚠	1-162-116-00	CERAMIC	680PF	10%	2KV
C520 ⚠	1-129-722-00	FILM	0.047MF	5%	630V
C521	1-164-646-11	CERAMIC	2200PF	10%	500V
C524	1-102-244-00	CERAMIC	220PF	10%	500V
C525	1-162-815-11	CERAMIC	47PF	5%	500V
C526	1-126-960-11	ELECT	1MF	20%	50V
C527	1-126-965-11	ELECT	22MF	20%	50V

Note:

The components identified with shading and a critical symbol (⚠) are critical for safety. Replace only with part number specified.

Note:

Les composants identifies per un trame et une marque ⚠ sont critiques pout la securite. Ne les remplacer que par une piece portant le numero specifie.

REF.NO.	PART NO.	DESCRIPTION	REMARK		
C528	1-164-695-11	CERAMIC CHIP	0.0022MF	5%	50V
C529	1-164-161-11	CERAMIC CHIP	0.0022MF	10%	50V
C530	1-163-009-11	CERAMIC CHIP	0.001MF	10%	50V
C531	1-106-387-00	MYLAR	0.068MF	10%	200V
C541	1-126-969-11	ELECT	220MF	20%	50V
C542	1-126-967-11	ELECT	47MF	20%	50V
C543	1-136-173-00	FILM	0.47MF	5%	50V
C553	1-107-662-11	ELECT	22MF	20%	250V
C555	1-164-161-11	CERAMIC CHIP	0.0022MF	10%	50V
C562	1-126-941-11	ELECT	470MF	20%	25V
C564	1-126-941-11	ELECT	470MF	20%	25V
C571	1-126-964-11	ELECT	10MF	20%	50V
C573	1-126-963-11	ELECT	4.7MF	20%	50V
C574	1-107-635-11	ELECT	4.7MF	20%	160V
C575	1-164-232-11	CERAMIC CHIP	0.01MF	10%	50V
C576	1-123-024-21	ELECT	33MF		160V
C591	1-137-417-11	MYLAR	0.0047MF	10%	200V
C604 ⚠	1-113-920-11	CERAMIC	0.0022MF	20%	250V
C605 ⚠	1-113-920-11	CERAMIC	0.0022MF	20%	250V
C606 ⚠	1-117-894-11	ELECT	560MF	20%	250V
C607 ⚠	1-117-894-11	ELECT	560MF	20%	250V
C608 ⚠	1-113-910-11	CERAMIC	470PF	10%	250V
C609 ⚠	1-113-910-11	CERAMIC	470PF	10%	250V
C610	1-136-173-00	FILM	0.47MF	5%	50V
C611	1-136-173-00	FILM	0.47MF	5%	50V
C612	1-164-735-11	CERAMIC	0.0015MF	10%	500V
C613	1-164-625-11	CERAMIC	680PF	10%	500V
C614 ⚠	1-129-718-00	FILM	0.022MF	5%	630V
C615	1-136-169-00	FILM	0.22MF	5%	50V
C616	1-136-169-00	FILM	0.22MF	5%	50V
C617	1-165-127-11	CERAMIC	470PF	10%	500V
C618	1-165-127-11	CERAMIC	470PF	10%	500V
C619	1-123-024-21	ELECT	33MF		160V
C620	1-126-942-61	ELECT	1000MF	20%	25V
C621	1-126-941-11	ELECT	470MF	20%	25V
C623	1-137-368-11	FILM	0.0047MF	5%	50V
C624	1-137-417-11	MYLAR	0.0047MF	10%	200V
C626	1-104-665-11	ELECT	100MF	20%	25V
C629	1-104-665-11	ELECT	100MF	20%	25V
C632	1-126-964-11	ELECT	10MF	20%	50V
C653	1-104-664-11	ELECT	47MF	20%	25V
C654	1-126-382-11	ELECT	100MF	20%	16V
C690	1-126-959-11	ELECT	0.47MF	20%	50V
C691	1-126-941-11	ELECT	470MF	20%	25V
C692	1-104-664-11	ELECT	47MF	20%	25V
C693	1-136-173-00	FILM	0.47MF	5%	50V

REF.NO.	PART NO.	DESCRIPTION	REMARK
		FILTER	
CF001	1-767-487-11	VIBRATOR, CRYSTAL	
		CONNECTOR	
CN101	1-508-786-00	PIN, CONNECTOR (5MM PITCH) 2P	
CN150		VARIANT (SEE VARIANT PARTS LIST)	
CN203 *	1-560-124-00	PLUG, CONNECTOR (2.5MM) 4P	
CN301 *	1-564-509-11	PLUG, CONNECTOR 6P	
CN302		VARIANT (SEE VARIANT PARTS LIST)	
CN401	1-564-505-11	PLUG, CONNECTOR 2P	
CN402	1-564-505-11	PLUG, CONNECTOR 2P	
CN501	1-580-798-11	PIN, CONNECTOR (DY) 6P	
CN502 *	1-564-509-11	PLUG, CONNECTOR 6P	
CN601 *	1-580-843-11	PIN, CONNECTOR (POWER)	
CN602	1-508-786-00	PIN, CONNECTOR (5MM PITCH) 2P	
CN604 *	1-564-506-11	PLUG, CONNECTOR 3P	
		DIODE	
D001	8-719-921-44	DIODE MTZJ-5.1C	
D002		VARIANT (SEE VARIANT PARTS LIST)	
D003	8-719-991-33	DIODE 1SS133T-77	
D004	8-719-991-33	DIODE 1SS133T-77	
D005	8-719-109-89	DIODE RD5.6ESB2	
D080	8-719-991-33	DIODE 1SS133T-77	
D201	8-719-110-17	DIODE RD10ESB2	
D202	8-719-110-17	DIODE RD10ESB2	
D204	8-719-110-17	DIODE RD10ESB2	
D205	8-719-982-22	DIODE MTZJ-30D	
D207	8-719-109-66	DIODE RD3.3ESB2	
D208	8-719-110-17	DIODE RD10ESB2	
D250	8-719-108-12	DIODE RD9.1EW	
D251	8-719-108-12	DIODE RD9.1EW	
D252	8-719-110-17	DIODE RD10ESB2	
D253	8-719-110-17	DIODE RD10ESB2	
D254	8-719-110-17	DIODE RD10ESB2	
D255	8-719-110-17	DIODE RD10ESB2	
D301	8-719-991-33	DIODE 1SS133T-77	
D302	8-719-921-44	DIODE MTZJ-5.1C	
D303	8-719-991-33	DIODE 1SS133T-77	
D304	8-719-991-33	DIODE 1SS133T-77	
D305	8-719-404-49	DIODE MA111	
D306	8-719-404-49	DIODE MA111	
D403	8-719-991-33	DIODE 1SS133T-77	
D501	8-719-945-80	DIODE ERC06-15S	
D502	8-719-908-03	DIODE GP08D	
D503	8-719-908-03	DIODE GP08D	
D520	8-719-067-63	DIODE MDV04-600	
D521	8-719-302-43	DIODE EL1Z	

A COMMON PARTS LISTING

Note:
The components identified with shading and a critical symbol (⚠) are critical for safety. Replace only with part number specified.

Note:
Les composants identifies per un trame et une marque ⚠ sont critiques pout la securite. Ne les remplacer que par une piece portant le numero specifie.

REF.NO.	PART NO.	DESCRIPTION	REMARK
D522	8-719-991-33	DIODE 1SS133T-77	
D523	8-719-991-33	DIODE 1SS133T-77	
D541	8-719-908-03	DIODE GP08D	
D550	8-719-110-08	DIODE RD8.2ESB2	
D552	8-719-302-43	DIODE EL1Z	
D561	8-719-979-85	DIODE EGP20G	
D562	8-719-979-85	DIODE EGP20G	
D571	8-719-991-33	DIODE 1SS133T-77	
D572	8-719-991-33	DIODE 1SS133T-77	
D573	8-719-110-08	DIODE RD8.2ESB2	
D574 ⚠	8-719-302-43	DIODE EL1Z	
D581	8-719-991-33	DIODE 1SS133T-77	
D601	8-719-510-51	DIODE D3SB60F	
D602	8-719-991-33	DIODE 1SS133T-77	
D604	8-719-060-90	DIODE S2L60F	
D605	8-719-060-90	DIODE S2L60F	
D610 ⚠	8-719-057-52	DIODE EZ0150AV1	
D615	8-719-510-12	DIODE D10SC4M	
D618	8-719-022-97	DIODE D2S4MF	
D620	8-719-022-97	DIODE D2S4MF	
D621	8-719-052-90	DIODE D1NL40-TA2	
D622	8-719-052-90	DIODE D1NL40-TA2	
D650	8-719-109-89	DIODE RD5.6ESB2	
D670	8-719-991-33	DIODE 1SS133T-77	
D690	8-719-991-33	DIODE 1SS133T-77	
D691	8-719-991-33	DIODE 1SS133T-77	
	FERRITE BEAD		
FB350		VARIANT (SEE VARIANT PARTS LIST)	
FB501	1-410-396-41	FERRITE 0.45UH	
FB521	1-410-397-21	FERRITE 1.1UH	
FB522	1-410-397-21	FERRITE 1.1UH	
FB601	1-410-396-41	FERRITE 0.45UH	
FB602	1-410-396-41	FERRITE 0.45UH	
FB603	1-412-911-11	FERRITE 0UH	
FB605	1-412-911-11	FERRITE 0UH	
	IC		
IC001	8-759-496-18	IC M37273MF-XXXSP	
IC002	8-759-371-21	IC MM1319AFBE	
IC003	8-759-353-44	IC ST24C08FM6TR	
IC004	8-742-014-11	HYB IC SBX1981-51	
IC010		VARIANT (SEE VARIANT PARTS LIST)	
IC202	8-759-100-96	IC UPC4558G2	
IC203	8-759-534-81	IC MM1313AD	
IC301		VARIANT (SEE VARIANT PARTS LIST)	

REF.NO.	PART NO.	DESCRIPTION	REMARK
IC302		VARIANT (SEE VARIANT PARTS LIST)	
IC401	8-759-490-17	IC TDA7057AQ/N2	
	4-382-854-11	SCREW (M3X10), P, SW (+) (for IC401)	
IC402	8-752-072-39	IC CXA2021S	
IC521 ⚠	8-759-700-07	IC NJM2903M	
IC541	8-759-980-58	IC TDA8172	
IC601 ⚠	8-729-039-65	TRANSISTOR MX0541B-F	
IC603 ⚠	8-749-012-13	IC DM-58	
IC604	8-759-198-03	IC PQ09RF21	
	JACK		
J200	1-774-750-21	JACK BLOCK, 2P	
J201		VARIANT (SEE VARIANT PARTS LIST)	
J202		VARIANT (SEE VARIANT PARTS LIST)	
	CHIP CONDUCTOR		
JR001	1-216-295-91	SHORT	
JR003	1-216-295-91	SHORT	
	COIL		
L001	1-410-470-11	INDUCTOR 10UH	
L002	1-412-032-11	INDUCTOR CHIP 100UH	
L003	1-412-032-11	INDUCTOR CHIP 100UH	
L101	1-412-029-11	INDUCTOR CHIP 10UH	
L150	1-412-032-11	INDUCTOR CHIP 100UH	
L151	1-412-029-11	INDUCTOR CHIP 10UH	
L301	1-412-031-11	INDUCTOR CHIP 47UH	
L302	1-412-029-11	INDUCTOR CHIP 10UH	
L350		VARIANT (SEE VARIANT PARTS LIST)	
L351		VARIANT (SEE VARIANT PARTS LIST)	
L501 ⚠	1-411-976-11	COIL, HORIZONTAL LINEARITY	
L502	1-412-552-11	INDUCTOR 2.2MMH	
L503	1-406-677-11	INDUCTOR 0UH	
L504	1-412-533-21	INDUCTOR 47UH	
L520	1-409-955-11	INDUCTOR 8UH	
L591 ⚠	1-412-528-61	INDUCTOR 18UH	
	IC LINK		
PS201	1-532-984-11	LINK, IC 2A/50V	
	TRANSISTOR		
Q001	8-729-216-22	TRANSISTOR 2SA1162-G	
Q002	8-729-422-27	TRANSISTOR 2SD601A-Q	
Q081	8-729-216-22	TRANSISTOR 2SA1162-G	
Q200	8-729-422-27	TRANSISTOR 2SD601A-Q	
Q201	8-729-422-27	TRANSISTOR 2SD601A-Q	
Q203	8-729-119-76	TRANSISTOR 2SA1175-HFE	
Q204	8-729-422-27	TRANSISTOR 2SD601A-Q	

REF.NO.	PART NO.	DESCRIPTION	REMARK
Q286	8-729-216-22	TRANSISTOR 2SA1162-G	
Q287	8-729-216-22	TRANSISTOR 2SA1162-G	
Q288	8-729-422-27	TRANSISTOR 2SD601A-Q	
Q300	8-729-422-27	TRANSISTOR 2SD601A-Q	
Q302	8-729-422-27	TRANSISTOR 2SD601A-Q	
Q305	8-729-216-22	TRANSISTOR 2SA1162-G	
Q306	8-729-216-22	TRANSISTOR 2SA1162-G	
Q307	8-729-216-22	TRANSISTOR 2SA1162-G	
Q308	8-729-216-22	TRANSISTOR 2SA1162-G	
Q309	8-729-216-22	TRANSISTOR 2SA1162-G	
Q310	8-729-216-22	TRANSISTOR 2SA1162-G	
Q350		VARIANT (SEE VARIANT PARTS LIST)	
Q351		VARIANT (SEE VARIANT PARTS LIST)	
Q352		VARIANT (SEE VARIANT PARTS LIST)	
Q353		VARIANT (SEE VARIANT PARTS LIST)	
Q354		VARIANT (SEE VARIANT PARTS LIST)	
Q355		VARIANT (SEE VARIANT PARTS LIST)	
Q356		VARIANT (SEE VARIANT PARTS LIST)	
Q357		VARIANT (SEE VARIANT PARTS LIST)	
Q358		VARIANT (SEE VARIANT PARTS LIST)	
Q359		VARIANT (SEE VARIANT PARTS LIST)	
Q360		VARIANT (SEE VARIANT PARTS LIST)	
Q400	8-729-422-27	TRANSISTOR 2SD601A-Q	
Q501	8-729-140-50	TRANSISTOR 2SC3209LK	
Q502	8-729-043-43	TRANSISTOR 2SC5426-01	
Q521	8-729-422-27	TRANSISTOR 2SD601A-Q	
Q522	8-729-809-29	TRANSISTOR 2SC4159-E	
Q550	8-729-119-78	TRANSISTOR 2SC2785-HFE	
Q555	8-729-422-27	TRANSISTOR 2SD601A-Q	
Q571	8-729-200-17	TRANSISTOR 2SA1091-O	
Q601	8-729-119-78	TRANSISTOR 2SC2785-HFE	
Q604	8-729-119-78	TRANSISTOR 2SC2785-HFE	
Q608	8-729-119-76	TRANSISTOR 2SA1175-HFE	
Q650	8-729-111-55	TRANSISTOR 2SD1312-K	
Q670	8-729-140-96	TRANSISTOR 2SD774-34	

RESISTOR

REF.NO.	PART NO.	DESCRIPTION			REMARK
R001	1-216-033-00	RES, CHIP	220	5%	1/10W
R002	1-216-073-00	RES, CHIP	10K	5%	1/10W
R003	1-216-033-00	RES, CHIP	220	5%	1/10W
R004	1-216-073-00	RES, CHIP	10K	5%	1/10W
R005	1-216-025-91	RES, CHIP	100	5%	1/10W
R006	1-216-049-91	RES, CHIP	1K	5%	1/10W
R007	1-216-025-91	RES, CHIP	100	5%	1/10W
R008	1-216-033-00	RES, CHIP	220	5%	1/10W
R010	1-216-033-00	RES, CHIP	220	5%	1/10W
R011	1-216-033-00	RES, CHIP	220	5%	1/10W
R013	1-216-081-00	RES, CHIP	22K	5%	1/10W
R016	1-216-041-00	RES, CHIP	470	5%	1/10W
R017	1-216-113-00	RES, CHIP	470K	5%	1/10W
R018	1-216-049-91	RES, CHIP	1K	5%	1/10W
R019	1-249-425-11	CARBON	4.7K	5%	1/4W
R020	1-249-427-11	CARBON	6.8K	5%	1/4W
R021	1-249-415-11	CARBON	680	5%	1/4W
R022	1-249-416-11	CARBON	820	5%	1/4W
R023	1-249-421-11	CARBON	2.2K	5%	1/4W
R025	1-249-425-11	CARBON	4.7K	5%	1/4W
R026	1-249-425-11	CARBON	4.7K	5%	1/4W
R027	1-249-425-11	CARBON	4.7K	5%	1/4W
R028	1-216-049-91	RES, CHIP	1K	5%	1/10W
R031	1-216-045-00	RES, CHIP	680	5%	1/10W
R032	1-247-815-91	CARBON	220	5%	1/4W
R033	1-247-815-91	CARBON	220	5%	1/4W
R034	1-216-033-00	RES, CHIP	220	5%	1/10W
R035	1-216-033-00	RES, CHIP	220	5%	1/10W
R038	1-216-049-91	RES, CHIP	1K	5%	1/10W
R040	1-249-413-11	CARBON	470	5%	1/4W
R043	1-249-417-11	CARBON	1K	5%	1/4W
R044	1-247-815-91	CARBON	220	5%	1/4W
R045	1-216-065-91	RES, CHIP	4.7K	5%	1/10W
R046	1-247-815-91	CARBON	220	5%	1/4W
R047	1-216-065-91	RES, CHIP	4.7K	5%	1/10W
R048	1-216-025-91	RES, CHIP	100	5%	1/10W
R049	1-216-089-91	RES, CHIP	47K	5%	1/10W
R050	1-216-073-00	RES, CHIP	10K	5%	1/10W
R051	1-216-033-00	RES, CHIP	220	5%	1/10W
R054	1-216-073-00	RES, CHIP	10K	5%	1/10W
R056	1-249-425-11	CARBON	4.7K	5%	1/4W
R057	1-216-065-91	RES, CHIP	4.7K	5%	1/10W
R058	1-216-065-91	RES, CHIP	4.7K	5%	1/10W
R065	1-216-295-91	SHORT	0		
R064		VARIANT (SEE VARIANT PARTS LIST)			
R066	1-216-033-00	RES, CHIP	220	5%	1/10W
R067	1-216-033-00	RES, CHIP	220	5%	1/10W
R068	1-247-815-91	CARBON	220	5%	1/4W
R069	1-247-815-91	CARBON	220	5%	1/4W
R070	1-249-425-11	CARBON	4.7K	5%	1/4W
R071	1-216-065-91	RES, CHIP	4.7K	5%	1/10W
R073	1-249-425-11	CARBON	4.7K	5%	1/4W
R074	1-216-073-00	RES, CHIP	10K	5%	1/10W
R075	1-216-073-00	RES, CHIP	10K	5%	1/10W
R076	1-216-121-91	RES, CHIP	1M	5%	1/10W
R077	1-216-097-91	RES, CHIP	100K	5%	1/10W
R078	1-247-815-91	CARBON	220	5%	1/4W
R081		VARIANT (SEE VARIANT PARTS LIST)			
R085	1-216-049-91	RES, CHIP	1K	5%	1/10W

REF.NO.	PART NO.	DESCRIPTION			REMARK
R086	1-216-045-00	RES, CHIP	680	5%	1/10W
R087	1-216-045-00	RES, CHIP	680	5%	1/10W
R088	1-216-045-00	RES, CHIP	680	5%	1/10W
R090	1-249-429-11	CARBON	10K	5%	1/4W
R091	1-216-073-00	RES, CHIP	10K	5%	1/10W
R092	1-216-073-00	RES, CHIP	10K	5%	1/10W
R096	1-216-045-00	RES, CHIP	680	5%	1/10W
R101	1-216-073-00	RES, CHIP	10K	5%	1/10W
R150	1-216-025-91	RES, CHIP	100	5%	1/10W
R151	1-216-025-91	RES, CHIP	100	5%	1/10W
R200	1-216-022-00	RES, CHIP	75	5%	1/10W
R201	1-216-113-00	RES, CHIP	470K	5%	1/10W
R202	1-216-113-00	RES, CHIP	470K	5%	1/10W
R203	1-216-025-91	RES, CHIP	100	5%	1/10W
R204	1-216-043-91	RES, CHIP	560	5%	1/10W
R205	1-216-043-91	RES, CHIP	560	5%	1/10W
R207	1-216-025-91	RES, CHIP	100	5%	1/10W
R209	1-216-025-91	RES, CHIP	100	5%	1/10W
R210	1-216-073-00	RES, CHIP	10K	5%	1/10W
R211	1-247-807-31	CARBON	100	5%	1/4W
R212	1-249-425-11	CARBON	4.7K	5%	1/4W
R213	1-216-057-00	RES, CHIP	2.2K	5%	1/10W
R214	1-216-113-00	RES, CHIP	470K	5%	1/10W
R215	1-216-033-00	RES, CHIP	220	5%	1/10W
R216	1-216-113-00	RES, CHIP	470K	5%	1/10W
R217	1-216-033-00	RES, CHIP	220	5%	1/10W
R218	1-216-067-00	RES, CHIP	5.6K	5%	1/10W
R219	1-216-073-00	RES, CHIP	10K	5%	1/10W
R220	1-216-073-00	RES, CHIP	10K	5%	1/10W
R221	1-216-073-00	RES, CHIP	10K	5%	1/10W
R222	1-216-067-00	RES, CHIP	5.6K	5%	1/10W
R223	1-216-073-00	RES, CHIP	10K	5%	1/10W
R224	1-216-073-00	RES, CHIP	10K	5%	1/10W
R225	1-216-073-00	RES, CHIP	10K	5%	1/10W
R226	1-249-425-11	CARBON	4.7K	5%	1/4W
R227	1-216-097-91	RES, CHIP	100K	5%	1/10W
R228	1-216-065-91	RES, CHIP	4.7K	5%	1/10W
R229	1-216-097-91	RES, CHIP	100K	5%	1/10W
R230	1-216-073-00	RES, CHIP	10K	5%	1/10W
R231	1-216-055-00	RES, CHIP	1.8K	5%	1/10W
R232	1-249-429-11	CARBON	10K	5%	1/4W
R233	1-249-429-11	CARBON	10K	5%	1/4W
R236	1-249-420-11	CARBON	1.8K	5%	1/4W
R241	1-216-065-91	RES, CHIP	4.7K	5%	1/10W
R242	1-216-083-00	RES, CHIP	27K	5%	1/10W
R243	1-216-689-11	RES, CHIP	39K	5%	1/10W
R244	1-216-049-91	RES, CHIP	1K	5%	1/10W
R245	1-216-049-91	RES, CHIP	1K	5%	1/10W

REF.NO.	PART NO.	DESCRIPTION			REMARK
R246	1-249-425-11	CARBON	4.7K	5%	1/4W
R247	1-249-425-11	CARBON	4.7K	5%	1/4W
R248	1-216-049-91	RES, CHIP	1K	5%	1/10W
R249	1-216-025-91	RES, CHIP	100	5%	1/10W
R250	1-216-033-00	RES, CHIP	220	5%	1/10W
R251	1-216-025-91	RES, CHIP	100	5%	1/10W
R252	1-216-033-00	RES, CHIP	220	5%	1/10W
R253	1-215-899-11	METAL OXIDE	15K	5%	2W F
R254	1-216-033-00	RES, CHIP	220	5%	1/10W
R257	1-249-429-11	CARBON	10K	5%	1/4W
R260	1-216-025-91	RES, CHIP	100	5%	1/10W
R261	1-216-025-91	RES, CHIP	100	5%	1/10W
R262	1-216-025-91	RES, CHIP	100	5%	1/10W
R263	1-247-815-91	CARBON	220	5%	1/4W
R264	1-247-815-91	CARBON	220	5%	1/4W
R265	1-249-425-11	CARBON	4.7K	5%	1/4W
R266	1-249-425-11	CARBON	4.7K	5%	1/4W
R267	1-216-022-00	RES, CHIP	75	5%	1/10W
R268	1-216-022-00	RES, CHIP	75	5%	1/10W
R269	1-216-049-91	RES, CHIP	1K	5%	1/10W
R270	1-216-022-00	RES, CHIP	75	5%	1/10W
R271	1-216-113-00	RES, CHIP	470K	5%	1/10W
R272	1-216-113-00	RES, CHIP	470K	5%	1/10W
R273	1-216-065-91	RES, CHIP	4.7K	5%	1/10W
R274	1-216-065-91	RES, CHIP	4.7K	5%	1/10W
R276	1-216-295-91	SHORT			
R277	1-216-295-91	SHORT			
R278		VARIANT (SEE VARIANT PARTS LIST)			
R279	1-249-425-11	CARBON	4.7K	5%	1/4W
R296	1-249-437-11	CARBON	47K	5%	1/4W
R297	1-216-043-91	RES, CHIP	560	5%	1/10W
R298	1-216-041-00	RES, CHIP	470	5%	1/10W
R299	1-249-425-11	CARBON	4.7K	5%	1/4W
R300		VARIANT (SEE VARIANT PARTS LIST)			
R301	1-216-295-91	SHORT			
R302		VARIANT (SEE VARIANT PARTS LIST)			
R304	1-216-073-00	RES, CHIP	10K	5%	1/10W
R305	1-216-033-00	RES, CHIP	220	5%	1/10W
R306	1-208-806-11	RES, CHIP	10K	0.50%	1/10W
R307		VARIANT (SEE VARIANT PARTS LIST)			
R308		VARIANT (SEE VARIANT PARTS LIST)			
R309	1-249-431-11	CARBON	15K	5%	1/4W
R310	1-216-049-91	RES, CHIP	1K	5%	1/10W
R311	1-249-427-11	CARBON	6.8K	5%	1/4W
R312	1-216-033-00	RES, CHIP	220	5%	1/10W
R313	1-216-033-00	RES, CHIP	220	5%	1/10W
R314	1-216-033-00	RES, CHIP	220	5%	1/10W
R315	1-216-033-00	RES, CHIP	220	5%	1/10W

Note:

The components identified with shading and a critical symbol (⚠) are critical for safety. Replace only with part number specified.

Note:

Les composants identifies per un trame et une marque ⚠ sont critiques pout la securite. Ne les remplacer que par une piece portant le numero specifie.

REF.NO.	PART NO.	DESCRIPTION			REMARK
R316	1-247-807-31	CARBON	100	5%	1/4W
R317		VARIANT (SEE VARIANT PARTS LIST)			
R318		VARIANT (SEE VARIANT PARTS LIST)			
R319	1-216-073-00	RES, CHIP	10K	5%	1/10W
R320		VARIANT (SEE VARIANT PARTS LIST)			
R321		VARIANT (SEE VARIANT PARTS LIST)			
R322		VARIANT (SEE VARIANT PARTS LIST)			
R323	1-216-037-00	RES, CHIP	330	5%	1/10W
R324	1-216-065-91	RES, CHIP	4.7K	5%	1/10W
R328	1-247-807-31	CARBON	100	5%	1/4W
R329	1-216-025-91	RES, CHIP	100	5%	1/10W
R330	1-216-025-91	RES, CHIP	100	5%	1/10W
R331	1-216-025-91	RES, CHIP	100	5%	1/10W
R333	1-216-049-91	RES, CHIP	1K	5%	1/10W
R334		VARIANT (SEE VARIANT PARTS LIST)			
R335	1-216-057-00	RES, CHIP	2.2K	5%	1/10W
R336	1-216-057-00	RES, CHIP	2.2K	5%	1/10W
R337	1-216-057-00	RES, CHIP	2.2K	5%	1/10W
R340	1-249-417-11	CARBON	1K	5%	1/4W
R341	1-216-073-00	RES, CHIP	10K	5%	1/10W
R342	1-216-069-00	RES, CHIP	6.8K	5%	1/10W
R343	1-216-129-00	RES, CHIP	2.2M	5%	1/10W
R344	1-216-295-91	SHORT			
R345	1-216-129-00	RES, CHIP	2.2M	5%	1/10W
R346	1-216-129-00	RES, CHIP	2.2M	5%	1/10W
R347	1-216-049-91	RES, CHIP	1K	5%	1/10W
R350		VARIANT (SEE VARIANT PARTS LIST)			
R351		VARIANT (SEE VARIANT PARTS LIST)			
R352		VARIANT (SEE VARIANT PARTS LIST)			
R353		VARIANT (SEE VARIANT PARTS LIST)			
R354		VARIANT (SEE VARIANT PARTS LIST)			
R355		VARIANT (SEE VARIANT PARTS LIST)			
R356	1-216-059-00	RES, CHIP	2.7K	5%	1/10W
R357		VARIANT (SEE VARIANT PARTS LIST)			
R358		VARIANT (SEE VARIANT PARTS LIST)			
R359		VARIANT (SEE VARIANT PARTS LIST)			
R361		VARIANT (SEE VARIANT PARTS LIST)			
R362		VARIANT (SEE VARIANT PARTS LIST)			
R363		VARIANT (SEE VARIANT PARTS LIST)			
R364		VARIANT (SEE VARIANT PARTS LIST)			
R365		VARIANT (SEE VARIANT PARTS LIST)			
R366		VARIANT (SEE VARIANT PARTS LIST)			
R367		VARIANT (SEE VARIANT PARTS LIST)			
R368		VARIANT (SEE VARIANT PARTS LIST)			
R369		VARIANT (SEE VARIANT PARTS LIST)			
R370	1-216-033-00	RES, CHIP	220	5%	1/10W
R372		VARIANT (SEE VARIANT PARTS LIST)			
R373		VARIANT (SEE VARIANT PARTS LIST)			

REF.NO.	PART NO.	DESCRIPTION			REMARK
R374		VARIANT (SEE VARIANT PARTS LIST)			
R375		VARIANT (SEE VARIANT PARTS LIST)			
R376		VARIANT (SEE VARIANT PARTS LIST)			
R377		VARIANT (SEE VARIANT PARTS LIST)			
R378		VARIANT (SEE VARIANT PARTS LIST)			
R379		VARIANT (SEE VARIANT PARTS LIST)			
R380		VARIANT (SEE VARIANT PARTS LIST)			
R381		VARIANT (SEE VARIANT PARTS LIST)			
R387	1-216-073-00	RES, CHIP	10K	5%	1/10W
R388	1-216-073-00	RES, CHIP	10K	5%	1/10W
R399	1-216-295-91	SHORT			
R400	1-249-429-11	CARBON	10K	5%	1/4W
R401	1-216-097-91	RES, CHIP	100K	5%	1/10W
R402	1-216-121-91	RES, CHIP	1M	5%	1/10W
R403	1-247-815-91	CARBON	220	5%	1/4W
R404	1-247-815-91	CARBON	220	5%	1/4W
R405	1-216-097-91	RES, CHIP	100K	5%	1/10W
R406	1-216-025-91	RES, CHIP	100	5%	1/10W
R432	1-249-429-11	CARBON	10K	5%	1/4W
R501	1-247-843-11	CARBON	3.3K	5%	1/4W
R502	1-215-892-11	METAL OXIDE	1K	5%	2W F
R503	1-249-426-11	CARBON	5.6K	5%	1/4W F
R504	1-216-349-00	METAL OXIDE	1	5%	1W F
R505	1-249-401-11	CARBON	47	5%	1/4W
R506	1-215-860-11	METAL OXIDE	33	5%	1W F
R507	1-260-097-11	CARBON	680	5%	1/2W
R508	1-216-449-11	METAL OXIDE	56	5%	2W F
R509	1-216-481-11	METALOXIDE	1.2K	5%	3W F
R510	1-216-449-11	METAL OXIDE	56	5%	2W F
R520	1-215-861-00	METAL OXIDE	47	5%	1W F
R521	1-249-411-11	CARBON	330	5%	1/4W
R522	1-249-415-11	CARBON	680	5%	1/4W
R523	1-216-073-00	RES, CHIP	10K	5%	1/10W
R524	1-249-429-11	CARBON	10K	5%	1/4W
R525	1-249-427-11	CARBON	6.8K	5%	1/4W
R526	1-216-081-00	RES, CHIP	22K	5%	1/10W
R527	1-216-079-00	RES, CHIP	18K	5%	1/10W
R528	1-249-421-11	CARBON	2.2K	5%	1/4W
R529	1-216-101-00	RES, CHIP	150K	5%	1/10W
R530	1-216-097-91	RES, CHIP	100K	5%	1/10W
R532	1-215-437-00	METAL	4.7K	1%	1/4W
R533 ⚠	1-215-461-00	METAL	47K	1%	1/4W
R534	1-215-451-00	METAL	18K	1%	1/4W
R535	1-249-441-11	CARBON	100K	5%	1/4W
R541	1-249-430-11	CARBON	12K	5%	1/4W
R542	1-249-429-11	CARBON	10K	5%	1/4W
R543	1-249-429-11	CARBON	10K	5%	1/4W
R544	1-216-351-00	METAL OXIDE	1.5	5%	1W F

A COMMON PARTS LISTING

Note:

The components identified with shading and a critical symbol (⚠) are critical for safety. Replace only with part number specified.

The components identified by ⋈ in this manual have been carefully factory-selected for each set in order to satisfy regulations regarding X-ray radiation. Should replacement be required, replace only with the value originally used.

REF.NO.	PART NO.	DESCRIPTION			REMARK
R546	1-215-890-11	METAL OXIDE	470	5%	2W F
R547	1-249-385-11	CARBON	2.2	5%	1/4W F
R548	1-249-430-11	CARBON	12K	5%	1/4W
R549	1-249-429-11	CARBON	10K	5%	1/4W
R550	1-249-421-11	CARBON	2.2K	5%	1/4W
R551	1-249-413-11	CARBON	470	5%	1/4W
R552	1-247-887-00	CARBON	220K	5%	1/4W
R553	1-260-312-11	CARBON	47	5%	1/2W
R554	1-216-097-91	RES, CHIP	100K	5%	1/10W
R557	1-249-421-11	CARBON	2.2K	5%	1/4W
R558	1-216-065-91	RES, CHIP	4.7K	5%	1/10W
R559	1-216-113-00	RES, CHIP	470K	5%	1/10W
R561 ⚠	1-249-377-11	CARBON	0.47	5%	1/4W F
R562 ⚠	1-260-288-11	CARBON	0.47	5%	1/2W
R571	1-216-365-00	METAL OXIDE	0.47	5%	2W F
R572	1-249-429-11	CARBON	10K	5%	1/4W
R573	1-247-895-91	CARBON	470K	5%	1/4W
R574	1-249-418-11	CARBON	1.2K	5%	1/4W F
R575	1-247-895-91	CARBON	470K	5%	1/4W
R576	1-249-441-11	CARBON	100K	5%	1/4W
R577	1-249-429-11	CARBON	10K	5%	1/4W
R578	1-215-902-11	METAL OXIDE	47K	5%	1W F
R579	1-208-777-11	RES, CHIP	620	0.50%	1/10W
R580	1-249-441-11	CARBON	100K	5%	1/4W
R581	1-249-427-11	CARBON	6.8K	5%	1/4W
R582	1-208-806-11	RES, CHIP	10K	0.50%	1/10W
R583	1-208-830-11	RES, CHIP	100K	0.50%	1/10W
⋈R584	1-208-822-11	RES, CHIP	47K	0.50%	1/10W
R585	1-216-073-00	RES, CHIP	10K	5%	1/10W
R586	1-216-073-00	RES, CHIP	10K	5%	1/10W
R587	1-216-073-00	RES, CHIP	10K	5%	1/10W
R591	1-215-882-00	METAL OXIDE	22	5%	2W F
R600		VARIANT (SEE VARIANT PARTS LIST)			
R601		VARIANT (SEE VARIANT PARTS LIST)			
R602		VARIANT (SEE VARIANT PARTS LIST)			
R603		VARIANT (SEE VARIANT PARTS LIST)			
R604	1-260-131-11	CARBON	470K	5%	1/2W
R605	1-260-131-11	CARBON	470K	5%	1/2W
R606	1-220-926-11	FUSIBLE	0.47	10%	1/2W F
R608	1-220-388-21	METAL OXIDE	68K	5%	1WF
R609	1-220-388-21	METAL OXIDE	68K	5%	1W F
R610	1-220-388-21	METAL OXIDE	68K	5%	1W F
R611	1-220-388-21	METAL OXIDE	68K	5%	1W F
R612	1-216-353-00	METAL OXIDE	2.2	5%	1W F
R613	1-216-353-00	METAL OXIDE	2.2	5%	1W F
R618	1-212-857-00	FUSIBLE	10	5%	1/4W F
R622	1-249-393-11	CARBON	10	5%	1/4W
R623	1-249-441-11	CARBON	100K	5%	1/4W
R624	1-249-421-11	CARBON	2.2K	5%	1/4W
R630	1-249-421-11	CARBON	2.2K	5%	1/4W
R631	1-249-429-11	CARBON	10K	5%	1/4W
R641	1-216-389-11	METAL OXIDE	1	5%	3W F
R642	1-249-437-11	CARBON	47K	5%	1/4W
R647	1-249-429-11	CARBON	10K	5%	1/4W
R650	1-249-415-11	CARBON	680	5%	1/4W
R670	1-249-421-11	CARBON	2.2K	5%	1/4W
R671	1-249-417-11	CARBON	1K	5%	1/4W
R673	1-249-421-11	CARBON	2.2K	5%	1/4W
R674	1-247-863-91	CARBON	22K	5%	1/4W
R675	1-215-859-00	METAL OXIDE	22	5%	1W F
R690	1-216-355-11	METAL OXIDE	3.3	5%	1W F
R691	1-249-395-11	CARBON	15	5%	1/4W
R692	1-249-395-11	CARBON	15	5%	1/4W
R699	1-249-413-11	CARBON	470	5%	1/4W F

RELAY

RY601⚠	1-755-018-11	RELAY
RY602⚠	1-755-266-11	RELAY, AC POWER

SWITCH

S001	1-692-431-21	SWITCH, TACTILE
S002	1-692-431-21	SWITCH, TACTILE
S003	1-692-431-21	SWITCH, TACTILE
S004	1-692-431-21	SWITCH, TACTILE
S005	1-692-431-21	SWITCH, TACTILE
S006	1-692-431-21	SWITCH, TACTILE
S007	1-692-431-21	SWITCH, TACTILE

SWITCH

SW501	1-572-707-11	SWITCH, LEVER

TRANSFORMER

T501	1-437-210-11	TRANSFORMER, HORIZONTAL DRIVE
T502	1-431-731-11	TRANSFORMER, MODULATION
T504 ⚠	1-453-268-11	FLYBACK TRANSFORMER ASSY, NX-4005//X4J4
T602 ⚠	1-429-992-11	TRANSFORMER, CONVERTER (PRT)
T603 ⚠	1-431-837-11	TRANSFORMER, CONVERTER (PIT)

THERMISTOR

THP601		VARIANT (SEE VARIANT PARTS LIST)

TUNER

TU101⚠	8-598-431-00	TUNER, FSS	BTF-WA411

REF.NO.	PART NO.	DESCRIPTION	REMARK
	VARISTOR		
VDR602	1-809-267-41	VARISTOR ERZV10D471	
	CRYSTAL		
X300		VARIANT (SEE VARIANT PARTS LIST)	
X301	1-567-505-11	OSCILLATOR, CRYSTAL	
X302		VARIANT (SEE VARIANT PARTS LIST)	

REF.NO.	PART NO.	DESCRIPTION	REMARK

A BOARD VARIANT PARTS LIST

The parts on this page belong to the following model(s) only:

KV-27S40/29XL40M/29XL40P/29SL40

A BOARD VARIANT LIST: KV-27S40/29XL40M/29XL40P/29SL40

CAPACITOR

REF.NO.	PART NO.	DESCRIPTION			REMARK
C307	1-126-964-11	ELECT	10MF	20%	50V
C309	1-164-232-11	CERAMIC	0.01MF	10%	50V
C314	1-163-003-11	CERAMIC	330PF	10%	50V
C320	1-126-959-11	ELECT	0.47MF	20%	50V
C321	1-163-133-00	CERAMIC	470PF	5%	50V
C323	1-163-243-11	CERAMIC	47PF	5%	50V
C324	1-163-243-11	CERAMIC	47PF	5%	50V
C350	1-164-232-11	CERAMIC	0.01MF	10%	50V
C351	1-126-964-11	ELECT	10MF	20%	50V
C352	1-164-232-11	CERAMIC	0.01MF	10%	50V
C353	1-163-038-91	CERAMIC	0.1MF		25V
C354	1-163-038-91	CERAMIC	0.1MF		25V
C355	1-164-222-11	CERAMIC	0.22MF		25V
C356	1-163-038-91	CERAMIC	0.1MF		25V
C357	1-164-232-11	CERAMIC	0.01MF	10%	50V
C358	1-104-664-11	ELECT	47MF	20%	25V
C359	1-164-232-11	CERAMIC	0.01MF	10%	50V
C360	1-164-232-11	CERAMIC	0.01MF	10%	50V
C361	1-163-037-11	CERAMIC	0.022MF	10%	50V
C362	1-126-964-11	ELECT	10MF	20%	50V
C380	1-164-232-11	CERAMIC	0.01MF	10%	50V
C381	1-164-232-11	CERAMIC	0.01MF	10%	50V
C382	1-164-232-11	CERAMIC	0.01MF	10%	50V

DIODE

REF.NO.	PART NO.	DESCRIPTION	REMARK
D002	8-719-070-80	DIODE LNK0120022G	

FERRITE BEAD

REF.NO.	PART NO.	DESCRIPTION	REMARK
FB350	1-216-295-91	SHORT	

IC

REF.NO.	PART NO.	DESCRIPTION	REMARK
IC301	8-752-083-09	IC CXA2061S	
IC302	8-752-385-80	IC CXD2073S	

JACK

REF.NO.	PART NO.	DESCRIPTION	REMARK
J201	1-774-749-11	JACK BLOCK, PIN	

COIL

REF.NO.	PART NO.	DESCRIPTION			REMARK
L350	1-412-029-11	INDUCTOR	10UH		
L351	1-412-031-11	INDUCTOR	47UH		

TRANSISTOR

REF.NO.	PART NO.	DESCRIPTION			REMARK
Q350	8-729-216-22	TRANSISTOR 2SA1162-G			
Q351	8-729-422-27	TRANSISTOR 2SD601A-Q			
Q352	8-729-216-22	TRANSISTOR 2SA1162-G			
Q353	8-729-216-22	TRANSISTOR 2SA1162-G			
Q354	8-729-216-22	TRANSISTOR 2SA1162-G			
Q355	8-729-422-27	TRANSISTOR 2SD601A-Q			
Q356	8-729-216-22	TRANSISTOR 2SA1162-G			
Q357	8-729-216-22	TRANSISTOR 2SA1162-G			
Q358	8-729-422-27	TRANSISTOR 2SD601A-Q			
Q359	8-729-216-22	TRANSISTOR 2SA1162-G			
Q360	8-729-216-22	TRANSISTOR 2SA1162-G			

RESISTOR

REF.NO.	PART NO.	DESCRIPTION			REMARK
R307	1-216-065-91	RES, CHIP	4.7K	5%	1/10W
R308	1-216-025-91	RES, CHIP	100	5%	1/10W
R317	1-216-025-91	RES, CHIP	100	5%	1/10W
R318	1-216-025-91	RES, CHIP	100	5%	1/10W
R320	1-247-807-31	CARBON	100	5%	1/4W
R321	1-216-025-91	RES, CHIP	100	5%	1/10W
R322	1-216-025-91	RES, CHIP	100	5%	1/10W
R334	1-216-025-91	RES, CHIP	100	5%	1/10W
R350	1-208-766-11	RES, CHIP	220	0.50%	1/10W
R351	1-208-766-11	RES, CHIP	220	0.50%	1/10W
R352	1-208-794-11	RES, CHIP	3.3K	0.50%	1/10W
R353	1-216-295-91	SHORT			
R354	1-208-794-11	RES, CHIP	3.3K	0.50%	1/10W
R355	1-216-295-91	SHORT			
R357	1-216-091-00	RES, CHIP	56K	5%	1/10W
R358	1-216-043-91	RES, CHIP	560	5%	1/10W
R359	1-216-057-00	RES, CHIP	2.2K	5%	1/10W
R361	1-216-049-91	RES, CHIP	1K	5%	1/10W
R362	1-216-043-91	RES, CHIP	560	5%	1/10W
R363	1-216-037-00	RES, CHIP	330	5%	1/10W
R364	1-216-025-91	RES, CHIP	100	5%	1/10W
R365	1-216-025-91	RES, CHIP	100	5%	1/10W
R366	1-216-053-00	RES, CHIP	1.5K	5%	1/10W
R367	1-216-057-00	RES, CHIP	2.2K	5%	1/10W
R368	1-216-033-00	RES, CHIP	220	5%	1/10W

Note:

The components identified with shading and a critical symbol (⚠) are critical for safety. Replace only with part number specified.

Note:

Les composants identifies per un trame et une marque ⚠ sont critiques pout la securite. Ne les remplacer que par une piece portant le numero specifie.

A BOARD VARIANT PARTS LIST

The parts on this page belong to the following model(s) only:

KV-27S40/29XL40M/29XL40P/29SL40

REF.NO.	PART NO.	DESCRIPTION	REMARK		
R369	1-216-041-00	RES, CHIP	470	5%	1/10W
R372	1-216-035-00	RES, CHIP	270	5%	1/10W
R373	1-216-025-91	RES, CHIP	100	5%	1/10W
R374	1-216-025-91	RES, CHIP	100	5%	1/10W
R375	1-216-053-00	RES, CHIP	1.5K	5%	1/10W
R376	1-216-049-91	RES, CHIP	1K	5%	1/10W
R377	1-216-049-91	RES, CHIP	1K	5%	1/10W
R378	1-216-041-00	RES, CHIP	470	5%	1/10W
R379	1-216-049-91	RES, CHIP	1K	5%	1/10W
R380	1-208-790-11	RES, CHIP	2.2K	0.50%	1/10W
R381	1-216-053-00	RES, CHIP	1.5K	5%	1/10W
R601 ⚠	1-219-513-11	CARBON	4.7M	5%	1/2W
R602 ⚠	1-205-998-11	CEMENTED	1	5%	10W
R603 ⚠	1-205-998-11	CEMENTED	1	5%	10W

THERMISTOR

THP601	1-809-539-11	THERMISTOR, POSITIVE

REF.NO.	PART NO.	DESCRIPTION	REMARK

A BOARD VARIANT PARTS LIST

The parts on this page belong to the following model(s) only:

KV-29SL65C

A BOARD VARIANT LIST: KV-29SL65C

REF.NO.	PART NO.	DESCRIPTION			REMARK
	CAPACITOR				
C200	1-126-959-11	ELECT	0.47MF	20%	50V
C250	1-126-960-11	ELECT	1MF	20%	50V
C251	1-126-960-11	ELECT	1MF	20%	50V
C252	1-126-959-11	ELECT	0.47MF	20%	50V
C307	1-126-964-11	ELECT	10MF	20%	50V
C309	1-164-232-11	CERAMIC	0.01MF	10%	50V
C314	1-163-003-11	CERAMIC	330PF	10%	50V
C320	1-126-959-11	ELECT	0.47MF	20%	50V
C321	1-163-133-00	CERAMIC	470PF	5%	50V
C323	1-163-243-11	CERAMIC	47PF	5%	50V
C324	1-163-243-11	CERAMIC	47PF	5%	50V
C350	1-164-232-11	CERAMIC	0.01MF	10%	50V
C351	1-126-964-11	ELECT	10MF	20%	50V
C352	1-164-232-11	CERAMIC	0.01MF	10%	50V
C353	1-163-038-91	CERAMIC	0.1MF		25V
C354	1-163-038-91	CERAMIC	0.1MF		25V
C355	1-164-222-11	CERAMIC	0.22MF		25V
C356	1-163-038-91	CERAMIC	0.1MF		25V
C357	1-164-232-11	CERAMIC	0.01MF	10%	50V
C358	1-104-664-11	ELECT	47MF	20%	25V
C359	1-164-232-11	CERAMIC	0.01MF	10%	50V
C360	1-164-232-11	CERAMIC	0.01MF	10%	50V
C361	1-163-037-11	CERAMIC	0.022MF	10%	50V
C362	1-126-964-11	ELECT	10MF	20%	50V
	CONNECTOR				
CN150	1-691-616-11	CONNECTOR, BOARD TO BOARD 15P			
CN302	1-691-616-11	CONNECTOR, BOARD TO BOARD 15P			
	DIODE				
D002	8-719-070-80	DIODE LNK0120022G			
	FERRITE BEAD				
FB350	1-216-295-91	SHORT			
	IC				
IC010	8-759-710-85	IC NJM2233BD			
IC301	8-752-083-09	IC CXA2061S			
IC302	8-752-385-80	IC CXD2073S			

REF.NO.	PART NO.	DESCRIPTION			REMARK
	JACK				
J201	1-774-751-11	TERMINAL BLOCK, S			
J202	1-774-749-11	JACK BLOCK, 3P			
	COIL				
L350	1-412-029-11	INDUCTOR	10UH		
L351	1-412-031-11	INDUCTOR	47UH		
	TRANSISTOR				
Q350	8-729-216-22	TRANSISTOR 2SA1162-G			
Q351	8-729-422-27	TRANSISTOR 2SD601A-Q			
Q352	8-729-216-22	TRANSISTOR 2SA1162-G			
Q353	8-729-216-22	TRANSISTOR 2SA1162-G			
Q354	8-729-216-22	TRANSISTOR 2SA1162-G			
Q355	8-729-422-27	TRANSISTOR 2SD601A-Q			
Q356	8-729-216-22	TRANSISTOR 2SA1162-G			
Q357	8-729-216-22	TRANSISTOR 2SA1162-G			
Q358	8-729-422-27	TRANSISTOR 2SD601A-Q			
Q359	8-729-216-22	TRANSISTOR 2SA1162-G			
Q360	8-729-216-22	TRANSISTOR 2SA1162-G			
	RESISTOR				
R278	1-216-295-91	SHORT			
R307	1-216-065-91	RES, CHIP	4.7K	5%	1/10W
R308	1-216-025-91	RES, CHIP	100	5%	1/10W
R317	1-216-025-91	RES, CHIP	100	5%	1/10W
R318	1-216-025-91	RES, CHIP	100	5%	1/10W
R320	1-247-807-31	CARBON	100	5%	1/4W
R321	1-216-025-91	RES, CHIP	100	5%	1/10W
R322	1-216-025-91	RES, CHIP	100	5%	1/10W
R334	1-216-025-91	RES, CHIP	100	5%	1/10W
R350	1-208-766-11	RES, CHIP	220	0.50%	1/10W
R351	1-208-766-11	RES, CHIP	220	0.50%	1/10W
R352	1-208-794-11	RES, CHIP	3.3K	0.50%	1/10W
R353	1-216-295-91	SHORT			
R354	1-208-794-11	RES, CHIP	3.3K	0.50%	1/10W
R355	1-216-295-91	SHORT			
R357	1-216-091-00	RES, CHIP	56K	5%	1/10W
R358	1-216-043-91	RES, CHIP	560	5%	1/10W
R359	1-216-057-00	RES, CHIP	2.2K	5%	1/10W
R361	1-216-049-91	RES, CHIP	1K	5%	1/10W
R362	1-216-043-91	RES, CHIP	560	5%	1/10W

Note:

The components identified with shading and a critical symbol (⚠) are critical for safety. Replace only with part number specified.

Note:

Les composants identifies per un trame et une marque ⚠ sont critiques pout la securite. Ne les remplacer que par une piece portant le numero specifie.

A BOARD VARIANT PARTS LIST

The parts on this page belong to the following model(s) only:

KV-29SL65C

REF.NO.	PART NO.	DESCRIPTION		REMARK	
R363	1-216-037-00	RES, CHIP	330	5%	1/10W
R364	1-216-025-91	RES, CHIP	100	5%	1/10W
R365	1-216-025-91	RES, CHIP	100	5%	1/10W
R366	1-216-053-00	RES, CHIP	1.5K	5%	1/10W
R367	1-216-057-00	RES, CHIP	2.2K	5%	1/10W
R368	1-216-033-00	RES, CHIP	220	5%	1/10W
R369	1-216-041-00	RES, CHIP	470	5%	1/10W
R372	1-216-035-00	RES, CHIP	270	5%	1/10W
R373	1-216-025-91	RES, CHIP	100	5%	1/10W
R374	1-216-025-91	RES, CHIP	100	5%	1/10W
R375	1-216-053-00	RES, CHIP	1.5K	5%	1/10W
R376	1-216-049-91	RES, CHIP	1K	5%	1/10W
R377	1-216-049-91	RES, CHIP	1K	5%	1/10W
R378	1-216-041-00	RES, CHIP	470	5%	1/10W
R379	1-216-049-91	RES, CHIP	1K	5%	1/10W
R380	1-208-790-11	RES, CHIP	2.2K	0.50%	1/10W
R381	1-216-053-00	RES, CHIP	1.5K	5%	1/10W
R600 ⚠	1-247-289-00	CARBON	8.2M	5%	1W
R602 ⚠	1-205-997-11	CEMENTED	2.2	5%	10W
R603 ⚠	1-205-997-11	CEMENTED	2.2	5%	10W

THERMISTOR

THP601	1-809-827-11	THERMISTOR, POSITIVE

REF.NO.	PART NO.	DESCRIPTION	REMARK

A BOARD VARIANT PARTS LIST

The parts on this page belong to the following model(s) only:

KV-27S45/29SL45

A BOARD VARIANT LIST: KV-27S45/29SL45

CAPACITOR

REF.NO.	PART NO.	DESCRIPTION			REMARK
C200	1-136-161-00	FILM	0.047MF	5%	50V
C307	1-126-964-11	ELECT	10MF	20%	50V
C309	1-164-232-11	CERAMIC	0.01MF	10%	50V
C314	1-163-003-11	CERAMIC	330PF	10%	50V
C320	1-126-959-11	ELECT	0.47MF	20%	50V
C321	1-163-133-00	CERAMIC	470PF	5%	50V
C323	1-163-243-11	CERAMIC	47PF	5%	50V
C324	1-163-243-11	CERAMIC	47PF	5%	50V
C350	1-164-232-11	CERAMIC	0.01MF	10%	50V
C351	1-126-964-11	ELECT	10MF	20%	50V
C352	1-164-232-11	CERAMIC	0.01MF	10%	50V
C353	1-163-038-91	CERAMIC	0.1MF		25V
C354	1-163-038-91	CERAMIC	0.1MF		25V
C355	1-164-222-11	CERAMIC	0.22MF		25V
C356	1-163-038-91	CERAMIC	0.1MF		25V
C357	1-164-232-11	CERAMIC	0.01MF	10%	50V
C358	1-104-664-11	ELECT	47MF	20%	25V
C359	1-164-232-11	CERAMIC	0.01MF	10%	50V
C360	1-164-232-11	CERAMIC	0.01MF	10%	50V
C361	1-163-037-11	CERAMIC	0.022MF	10%	50V
C362	1-126-964-11	ELECT	10MF	20%	50V

CONNECTOR

CN302	1-691-616-11	CONNECTOR, BOARD TO BOARD 15P

DIODE

D002	8-719-070-80	DIODE LNK0120022G

FERRITE BEAD

FB350	1-216-295-91	SHORT

IC

IC301	8-752-083-09	IC CXA2061S
IC302	8-752-385-80	IC CXD2073S

JACK

J201	1-774-751-11	TERMINAL BLOCK, S
J202	1-774-749-11	JACK BLOCK, 3P

COIL

REF.NO.	PART NO.	DESCRIPTION			REMARK
L350	1-412-029-11	INDUCTOR	10UH		
L351	1-412-031-11	INDUCTOR	47UH		

TRANSISTOR

Q350	8-729-216-22	TRANSISTOR 2SA1162-G
Q351	8-729-422-27	TRANSISTOR 2SD601A-Q
Q352	8-729-216-22	TRANSISTOR 2SA1162-G
Q353	8-729-216-22	TRANSISTOR 2SA1162-G
Q354	8-729-216-22	TRANSISTOR 2SA1162-G
Q355	8-729-422-27	TRANSISTOR 2SD601A-Q
Q356	8-729-216-22	TRANSISTOR 2SA1162-G
Q357	8-729-216-22	TRANSISTOR 2SA1162-G
Q358	8-729-422-27	TRANSISTOR 2SD601A-Q
Q359	8-729-216-22	TRANSISTOR 2SA1162-G
Q360	8-729-216-22	TRANSISTOR 2SA1162-G

RESISTOR

REF.NO.	PART NO.	DESCRIPTION			REMARK
R307	1-216-065-91	RES, CHIP	4.7K	5%	1/10W
R308	1-216-025-91	RES, CHIP	100	5%	1/10W
R317	1-216-025-91	RES, CHIP	100	5%	1/10W
R318	1-216-025-91	RES, CHIP	100	5%	1/10W
R320	1-247-807-31	CARBON	100	5%	1/4W
R321	1-216-025-91	RES, CHIP	100	5%	1/10W
R322	1-216-025-91	RES, CHIP	100	5%	1/10W
R334	1-216-025-91	RES, CHIP	100	5%	1/10W
R350	1-208-766-11	RES, CHIP	220	0.50%	1/10W
R351	1-208-766-11	RES, CHIP	220	0.50%	1/10W
R352	1-208-794-11	RES, CHIP	3.3K	0.50%	1/10W
R353	1-216-295-91	SHORT			
R354	1-208-794-11	RES, CHIP	3.3K	0.50%	1/10W
R355	1-216-295-91	SHORT			
R357	1-216-091-00	RES, CHIP	56K	5%	1/10W
R358	1-216-043-91	RES, CHIP	560	5%	1/10W
R359	1-216-057-00	RES, CHIP	2.2K	5%	1/10W
R361	1-216-049-91	RES, CHIP	1K	5%	1/10W
R362	1-216-043-91	RES, CHIP	560	5%	1/10W
R363	1-216-037-00	RES, CHIP	330	5%	1/10W
R364	1-216-025-91	RES, CHIP	100	5%	1/10W
R365	1-216-025-91	RES, CHIP	100	5%	1/10W
R366	1-216-053-00	RES, CHIP	1.5K	5%	1/10W
R367	1-216-057-00	RES, CHIP	2.2K	5%	1/10W
R368	1-216-033-00	RES, CHIP	220	5%	1/10W

Note:

The components identified with shading and a critical symbol (⚠) are critical for safety. Replace only with part number specified.

Note:

Les composants identifies per un trame et une marque ⚠ sont critiques pout la securite. Ne les remplacer que par une piece portant le numero specifie.

A BOARD VARIANT PARTS LIST

The parts on this page belong to the following model(s) only:

KV-27S45/29SL45

REF.NO.	PART NO.	DESCRIPTION	REMARK		
R369	1-216-041-00	RES, CHIP	470	5%	1/10W
R372	1-216-035-00	RES, CHIP	270	5%	1/10W
R373	1-216-025-91	RES, CHIP	100	5%	1/10W
R374	1-216-025-91	RES, CHIP	100	5%	1/10W
R375	1-216-053-00	RES, CHIP	1.5K	5%	1/10W
R376	1-216-049-91	RES, CHIP	1K	5%	1/10W
R377	1-216-049-91	RES, CHIP	1K	5%	1/10W
R378	1-216-041-00	RES, CHIP	470	5%	1/10W
R379	1-216-049-91	RES, CHIP	1K	5%	1/10W
R380	1-208-790-11	RES, CHIP	2.2K	0.50%	1/10W
R381	1-216-053-00	RES, CHIP	1.5K	5%	1/10W
R601 ⚠	1-219-513-11	CARBON	4.7M	5%	1/2W
R602 ⚠	1-205-998-11	CEMENTED	1	5%	10W
R603 ⚠	1-205-998-11	CEMENTED	1	5%	10W

THERMISTOR

THP601	1-809-539-11	THERMISTOR, POSITIVE

REF.NO.	PART NO.	DESCRIPTION	REMARK

A BOARD VARIANT PARTS LIST

The parts on this page belong to the following model(s) only:

KV-27S65/29SL65

A BOARD VARIANT LIST: KV-27S65/29SL65

REF.NO.	PART NO.	DESCRIPTION			REMARK
	CAPACITOR				
C200	1-136-161-00	FILM	0.047MF	5%	50V
C250	1-126-960-11	ELECT	1MF	20%	50V
C251	1-126-960-11	ELECT	1MF	20%	50V
C252	1-136-173-00	FILM	0.47MF	5%	50V
C307	1-126-964-11	ELECT	10MF	20%	50V
C309	1-164-232-11	CERAMIC	0.01MF	10%	50V
C314	1-163-003-11	CERAMIC	330PF	10%	50V
C320	1-126-959-11	ELECT	0.47MF	20%	50V
C321	1-163-133-00	CERAMIC	470PF	5%	50V
C323	1-163-243-11	CERAMIC	47PF	5%	50V
C324	1-163-243-11	CERAMIC	47PF	5%	50V
C350	1-164-232-11	CERAMIC	0.01MF	10%	50V
C351	1-126-964-11	ELECT	10MF	20%	50V
C352	1-164-232-11	CERAMIC	0.01MF	10%	50V
C353	1-163-038-91	CERAMIC	0.1MF		25V
C354	1-163-038-91	CERAMIC	0.1MF		25V
C355	1-164-222-11	CERAMIC	0.22MF		25V
C356	1-163-038-91	CERAMIC	0.1MF		25V
C357	1-164-232-11	CERAMIC	0.01MF	10%	50V
C358	1-104-664-11	ELECT	47MF	20%	25V
C359	1-164-232-11	CERAMIC	0.01MF	10%	50V
C360	1-164-232-11	CERAMIC	0.01MF	10%	50V
C361	1-163-037-11	CERAMIC	0.022MF	10%	50V
C362	1-126-964-11	ELECT	10MF	20%	50V
	CONNECTOR				
CN150	1-691-616-11	CONNECTOR, BOARD TO BOARD 15P			
CN302	1-691-616-11	CONNECTOR, BOARD TO BOARD 15P			
	DIODE				
D002	8-719-070-80	DIODE LNK0120022G			
	FERRITE BEAD				
FB350	1-216-295-91	SHORT			
	IC				
IC010	8-759-710-85	IC NJM2233BD			
IC301	8-752-083-09	IC CXA2061S			
IC302	8-752-385-80	IC CXD2073S			

REF.NO.	PART NO.	DESCRIPTION			REMARK
	JACK				
J201	1-774-751-11	TERMINAL BLOCK, S			
J202	1-774-749-11	JACK BLOCK, 3P			
	COIL				
L350	1-412-029-11	INDUCTOR	10UH		
L351	1-412-031-11	INDUCTOR	47UH		
	TRANSISTOR				
Q350	8-729-216-22	TRANSISTOR 2SA1162-G			
Q351	8-729-422-27	TRANSISTOR 2SD601A-Q			
Q352	8-729-216-22	TRANSISTOR 2SA1162-G			
Q353	8-729-216-22	TRANSISTOR 2SA1162-G			
Q354	8-729-216-22	TRANSISTOR 2SA1162-G			
Q355	8-729-422-27	TRANSISTOR 2SD601A-Q			
Q356	8-729-216-22	TRANSISTOR 2SA1162-G			
Q357	8-729-216-22	TRANSISTOR 2SA1162-G			
Q358	8-729-422-27	TRANSISTOR 2SD601A-Q			
Q359	8-729-216-22	TRANSISTOR 2SA1162-G			
Q360	8-729-216-22	TRANSISTOR 2SA1162-G			
	RESISTOR				
R278	1-216-295-91	SHORT			
R307	1-216-065-91	RES, CHIP	4.7K	5%	1/10W
R308	1-216-025-91	RES, CHIP	100	5%	1/10W
R317	1-216-025-91	RES, CHIP	100	5%	1/10W
R318	1-216-025-91	RES, CHIP	100	5%	1/10W
R320	1-247-807-31	CARBON	100	5%	1/4W
R321	1-216-025-91	RES, CHIP	100	5%	1/10W
R322	1-216-025-91	RES, CHIP	100	5%	1/10W
R334	1-216-025-91	RES, CHIP	100	5%	1/10W
R350	1-208-766-11	RES, CHIP	220	0.50%	1/10W
R351	1-208-766-11	RES, CHIP	220	0.50%	1/10W
R352	1-208-794-11	RES, CHIP	3.3K	0.50%	1/10W
R353	1-216-295-91	SHORT			
R354	1-208-794-11	RES, CHIP	3.3K	0.50%	1/10W
R355	1-216-295-91	SHORT			
R357	1-216-091-00	RES, CHIP	56K	5%	1/10W
R358	1-216-043-91	RES, CHIP	560	5%	1/10W
R359	1-216-057-00	RES, CHIP	2.2K	5%	1/10W
R361	1-216-049-91	RES, CHIP	1K	5%	1/10W
R362	1-216-043-91	RES, CHIP	560	5%	1/10W

Note:

The components identified with shading and a critical symbol (⚠) are critical for safety. Replace only with part number specified.

Note:

Les composants identifies per un trame et une marque ⚠ sont critiques pout la securite. Ne les remplacer que par une piece portant le numero specifie.

A BOARD VARIANT PARTS LIST

The parts on this page belong to the following model(s) only:

KV-27S65/29SL65

REF.NO.	PART NO.	DESCRIPTION	REMARK		
R363	1-216-037-00	RES, CHIP	330	5%	1/10W
R364	1-216-025-91	RES, CHIP	100	5%	1/10W
R365	1-216-025-91	RES, CHIP	100	5%	1/10W
R366	1-216-053-00	RES, CHIP	1.5K	5%	1/10W
R367	1-216-057-00	RES, CHIP	2.2K	5%	1/10W
R368	1-216-033-00	RES, CHIP	220	5%	1/10W
R369	1-216-041-00	RES, CHIP	470	5%	1/10W
R372	1-216-035-00	RES, CHIP	270	5%	1/10W
R373	1-216-025-91	RES, CHIP	100	5%	1/10W
R374	1-216-025-91	RES, CHIP	100	5%	1/10W
R375	1-216-053-00	RES, CHIP	1.5K	5%	1/10W
R376	1-216-049-91	RES, CHIP	1K	5%	1/10W
R377	1-216-049-91	RES, CHIP	1K	5%	1/10W
R378	1-216-041-00	RES, CHIP	470	5%	1/10W
R379	1-216-049-91	RES, CHIP	1K	5%	1/10W
R380	1-208-790-11	RES, CHIP	2.2K	0.50%	1/10W
R381	1-216-053-00	RES, CHIP	1.5K	5%	1/10W
R601 ⚠	1-219-513-11	CARBON	4.7M	5%	1/2W
R602 ⚠	1-205-998-11	CEMENTED	1	5%	10W
R603 ⚠	1-205-998-11	CEMENTED	1	5%	10W
	THERMISTOR				
THP601	1-809-539-11	THERMISTOR	POSITIVE		

REF.NO.	PART NO.	DESCRIPTION	REMARK

A BOARD VARIANT PARTS LIST

The parts on this page belong to the following model(s) only:

KV-29SL40C

A BOARD VARIANT LIST: KV-29SL40C

CAPACITOR

REF.NO.	PART NO.	DESCRIPTION			REMARK
C307	1-126-964-11	ELECT	10MF	20%	50V
C309	1-164-232-11	CERAMIC	0.01MF	10%	50V
C314	1-163-003-11	CERAMIC	330PF	10%	50V
C320	1-126-959-11	ELECT	0.47MF	20%	50V
C321	1-163-133-00	CERAMIC	470PF	5%	50V
C323	1-163-243-11	CERAMIC	47PF	5%	50V
C324	1-163-243-11	CERAMIC	47PF	5%	50V
C350	1-164-232-11	CERAMIC	0.01MF	10%	50V
C351	1-126-964-11	ELECT	10MF	20%	50V
C352	1-164-232-11	CERAMIC	0.01MF	10%	50V
C353	1-163-038-91	CERAMIC	0.1MF		25V
C354	1-163-038-91	CERAMIC	0.1MF		25V
C355	1-164-222-11	CERAMIC	0.22MF		25V
C356	1-163-038-91	CERAMIC	0.1MF		25V
C357	1-164-232-11	CERAMIC	0.01MF	10%	50V
C358	1-104-664-11	ELECT	47MF	20%	25V
C359	1-164-232-11	CERAMIC	0.01MF	10%	50V
C360	1-164-232-11	CERAMIC	0.01MF	10%	50V
C361	1-163-037-11	CERAMIC	0.022MF	10%	50V
C362	1-126-964-11	ELECT	10MF	20%	50V
C380	1-164-232-11	CERAMIC	0.01MF	10%	50V
C381	1-164-232-11	CERAMIC	0.01MF	10%	50V
C382	1-164-232-11	CERAMIC	0.01MF	10%	50V

DIODE

REF.NO.	PART NO.	DESCRIPTION	REMARK
D002	8-719-070-80	DIODE LNK0120022G	

FERRITE BEAD

REF.NO.	PART NO.	DESCRIPTION	REMARK
FB350	1-216-295-91	SHORT	

IC

REF.NO.	PART NO.	DESCRIPTION	REMARK
IC301	8-752-083-09	IC CXA2061S	
IC302	8-752-385-80	IC CXD2073S	

JACK

REF.NO.	PART NO.	DESCRIPTION	REMARK
J201	1-774-749-11	JACK BLOCK, PIN	

COIL

REF.NO.	PART NO.	DESCRIPTION		REMARK
L350	1-412-029-11	INDUCTOR	10UH	
L351	1-412-031-11	INDUCTOR	47UH	

TRANSISTOR

REF.NO.	PART NO.	DESCRIPTION	REMARK
Q350	8-729-216-22	TRANSISTOR 2SA1162-G	
Q351	8-729-422-27	TRANSISTOR 2SD601A-Q	
Q352	8-729-216-22	TRANSISTOR 2SA1162-G	
Q353	8-729-216-22	TRANSISTOR 2SA1162-G	
Q354	8-729-216-22	TRANSISTOR 2SA1162-G	
Q355	8-729-422-27	TRANSISTOR 2SD601A-Q	
Q356	8-729-026-49	TRANSISTOR 2SA1037AK-T146-R	
Q357	8-729-216-22	TRANSISTOR 2SA1162-G	
Q358	8-729-422-27	TRANSISTOR 2SD601A-Q	
Q359	8-729-216-22	TRANSISTOR 2SA1162-G	
Q360	8-729-216-22	TRANSISTOR 2SA1162-G	

RESISTOR

REF.NO.	PART NO.	DESCRIPTION			REMARK
R307	1-216-065-91	RES, CHIP	4.7K	5%	1/10W
R308	1-216-025-91	RES, CHIP	100	5%	1/10W
R317	1-216-025-91	RES, CHIP	100	5%	1/10W
R318	1-216-025-91	RES, CHIP	100	5%	1/10W
R320	1-247-807-31	CARBON	100	5%	1/4W
R321	1-216-025-91	RES, CHIP	100	5%	1/10W
R322	1-216-025-91	RES, CHIP	100	5%	1/10W
R334	1-216-025-91	RES, CHIP	100	5%	1/10W
R350	1-208-766-11	RES, CHIP	220	0.50%	1/10W
R351	1-208-766-11	RES, CHIP	220	0.50%	1/10W
R352	1-208-794-11	RES, CHIP	3.3K	0.50%	1/10W
R353	1-216-295-91	SHORT			
R354	1-208-794-11	RES, CHIP	3.3K	0.50%	1/10W
R355	1-216-295-91	SHORT			
R357	1-216-091-00	RES, CHIP	56K	5%	1/10W
R358	1-216-043-91	RES, CHIP	560	5%	1/10W
R359	1-216-057-00	RES, CHIP	2.2K	5%	1/10W
R361	1-216-049-91	RES, CHIP	1K	5%	1/10W
R362	1-216-043-91	RES, CHIP	560	5%	1/10W
R363	1-216-037-00	RES, CHIP	330	5%	1/10W
R364	1-216-025-91	RES, CHIP	100	5%	1/10W
R365	1-216-025-91	RES, CHIP	100	5%	1/10W
R366	1-216-053-00	RES, CHIP	1.5K	5%	1/10W
R367	1-216-057-00	RES, CHIP	2.2K	5%	1/10W
R368	1-216-033-00	RES, CHIP	220	5%	1/10W
R369	1-216-041-00	RES, CHIP	470	5%	1/10W
R372	1-216-035-00	RES, CHIP	270	5%	1/10W
R373	1-216-025-91	RES, CHIP	100	5%	1/10W
R374	1-216-025-91	RES, CHIP	100	5%	1/10W
R375	1-216-053-00	RES, CHIP	1.5K	5%	1/10W

Note:

The components identified with shading and a critical symbol (⚠) are critical for safety. Replace only with part number specified.

Note:

Les composants identifies per un trame et une marque ⚠ sont critiques pout la securite. Ne les remplacer que par une piece portant le numero specifie.

A BOARD VARIANT PARTS LIST

The parts on this page belong to the following model(s) only:

KV-29SL40C

REF.NO.	PART NO.	DESCRIPTION	REMARK		
R376	1-216-049-91	RES, CHIP	1K	5%	1/10W
R377	1-216-049-91	RES, CHIP	1K	5%	1/10W
R378	1-216-041-00	RES, CHIP	470	5%	1/10W
R379	1-216-049-91	RES, CHIP	1K	5%	1/10W
R380	1-208-790-11	RES, CHIP	2.2K	0.50%	1/10W
R381	1-216-053-00	RES, CHIP	1.5K	5%	1/10W
R602 ⚠	1-205-997-11	CEMENTED	2.2	5%	10W
R603 ⚠	1-205-997-11	CEMENTED	2.2	5%	10W

THERMISTOR

THP601	1-809-827-11	THERMISTOR	POSITIVE

REF.NO.	PART NO.	DESCRIPTION	REMARK

A BOARD VARIANT PARTS LIST

The parts on this page belong to the following model(s) only:

KV-29XT11A/29SL40A

Note:

The components identified with shading and a critical symbol (⚠) are critical for safety. Replace only with part number specified.

Note:

Les composants identifies per un trame et une marque ⚠ sont critiques pout la securite. Ne les remplacer que par une piece portant le numero specifie.

A BOARD VARIANT LIST: KV-29XT11A/20SL40A

REF.NO.	PART NO.	DESCRIPTION			REMARK
	CAPACITOR				
C300	1-163-099-00	CERAMIC	18PF	5%	50V
C302	1-163-099-00	CERAMIC	18PF	5%	50V
C309	1-163-017-00	CERAMIC	0.0047MF	10%	50V
C320	1-126-957-11	ELECT	0.22MF	20%	50V
C321	1-163-259-91	CERAMIC	220PF	5%	50V
C380	1-164-232-11	CERAMIC	0.01MF	10%	50V
C381	1-164-232-11	CERAMIC	0.01MF	10%	50V
C382	1-164-232-11	CERAMIC	0.01MF	10%	50V
	DIODE				
D002	8-719-070-79	DIODE LNK0120022G1			
	IC				
IC301	8-752-082-35	IC CXA2060AS			
	JACK				
J201	1-774-749-11	JACK BLOCK, PIN			
	RESISTOR				
R064	1-216-295-91	SHORT			
R081	1-249-413-11	CARBON	470	5%	1/4W
R300	1-216-295-91	SHORT			
R302	1-216-295-91	SHORT			
R307	1-216-051-00	RES, CHIP	1.2K	5%	1/10W
R600 ⚠	1-247-289-00	CARBON	8.2M	5%	1W
R602 ⚠	1-205-997-11	CEMENTED	2.2	5%	10W
R603 ⚠	1-205-997-11	CEMENTED	2.2	5%	10W
	THERMISTOR				
THP601	1-809-827-11	THERMISTOR, POSITIVE			
	CRYSTAL				
X300	1-579-972-11	VIBRATOR, CRYSTAL			
X302	1-579-973-11	VIBRATOR, CRYSTAL			

REF.NO.	PART NO.	DESCRIPTION	REMARK

Note:

The components identified with shading and a critical symbol (⚠) are critical for safety. Replace only with part number specified.

Note:

Les composants identifies per un trame et une marque ⚠ sont critiques pout la securite. Ne les remplacer que par une piece portant le numero specifie.

COMPLETE PARTS LISTING C E

REF.NO.	PART NO.	DESCRIPTION			REMARK

C

*** A-1331-775-A C BOARD, COMPLETE (all models)**

CAPACITOR

C1751	1-107-652-11	ELECT	10MF	20%	250V
C1752	1-162-114-00	CERAMIC	0.0047MF		2KV

CONNECTOR

CN1751*	1-564-509-11	PLUG, CONNECTOR 6P
CN1752*	1-564-509-11	PLUG, CONNECTOR 6P
CN1753	1-695-915-11	TAB (CONTACT)
CN1754	1-695-915-11	TAB (CONTACT)

DIODE

D1751	8-719-110-08	DIODE RD8.2ESB2
D1752	8-719-991-33	DIODE 1SS133T-77
D1753	8-719-991-33	DIODE 1SS133T-77
D1754	8-719-901-83	DIODE 1SS83
D1755	8-719-901-83	DIODE 1SS83
D1756	8-719-901-83	DIODE 1SS83

IC

IC1751	8-759-535-08	IC TDA6108Q
	4-382-854-11	SCREW (M3X10), P, SW (+) (for IC1751)

JACK

J1751 ⚠	1-251-688-11	SOCKET, CRT

COIL

L1751	1-408-613-31	INDUCTOR	68UH

TRANSISTOR

Q1751	8-729-119-78	TRANSISTOR 2SC2785-HFE

RESISTOR

R1751	1-249-441-11	CARBON	100K	5%	1/4W
R1752	1-249-427-11	CARBON	6.8K	5%	1/4W
R1753	1-249-421-11	CARBON	2.2K	5%	1/4W
R1754	1-249-429-11	CARBON	10K	5%	1/4W
R1755	1-249-413-11	CARBON	470	5%	1/4W
R1756	1-260-099-11	CARBON	1K	5%	1/2W
R1757	1-260-099-11	CARBON	1K	5%	1/2W
R1758	1-260-099-11	CARBON	1K	5%	1/2W
R1759	1-260-087-11	CARBON	100	5%	1/2W
R1760	1-260-123-11	CARBON	100K	5%	1/2W
R1761	1-216-373-11	METAL OXIDE	2.2	5%	2WF
R1762	1-216-375-00	METAL OXIDE	3.3	5%	2WF
R1763	1-247-807-31	CARBON	100	5%	1/4W
R1764	1-247-807-31	CARBON	100	5%	1/4W
R1765	1-247-807-31	CARBON	100	5%	1/4W

E

***A-1343-525-A E BOARD, COMPLETE** (KV-27S45, 29SL45, 27S40, 29XL40M, 29XL40P, 29SL40, 27S65, 29SL65)

***A-1343-526-A E BOARD, COMPLETE** (KV-29SL65C, 29SL40C, 29XT11A, 29SL40A)

CAPACITOR

C5000	1-107-652-11	ELECT	10MF	20%	250V
C5002	1-107-652-11	ELECT	10MF	20%	250V
C5003	1-136-601-11	FILM	0.01MF	10%	630V
C5004	1-130-471-00	MYLAR	0.001MF	5%	50V
C5006	1-130-471-00	MYLAR	0.001MF	5%	50V
C5007	1-130-467-00	MYLAR	470PF	5%	50V
C5008	1-130-471-00	MYLAR	0.001MF	5%	50V
C5009	1-126-965-11	ELECT	22MF	20%	50V
C5010	1-115-804-91	ELECT	120MF	20%	35V
C5020 ⚠	1-113-941-11	CERAMIC	0.0047MF	20%	125V
C5050 ⚠	1-136-311-51	FILM	0.47MF	20%	125V
KV-27S40/27S45/27S65/29SL40/29SL45/29SL65/29XL40M/29XL40P only)					
C5050 ⚠	1-136-311-61	FILM	0.47MF	20%	300V
(KV-29SL40A/29SL40C/29SL65C/29XT11A only)					

CONNECTOR

CN5000*	1-580-843-11	PIN, CONNECTOR	(POWER)
CN5001*	1-564-506-11	PLUG, CONNECTOR 3P	
CN5002*	1-580-844-11	PIN, CONNECTOR	(POWER)
CN5003	1-508-786-00	PIN, CONNECTOR	(5MM PITCH) 2P

DIODE

D5001	8-719-911-55	DIODE U05G
D5002	8-719-911-55	DIODE U05G
D5003	8-719-055-18	DIODE ERA22-08TP3
D5004	8-719-991-33	DIODE 1SS133T-77
D5005	8-719-991-33	DIODE 1SS133T-77

E K COMPLETE PARTS LISTING

Note:
The components identified with shading and a critical symbol (⚠) are critical for safety. Replace only with part number specified.

Note:
Les composants identifies per un trame et une marque ⚠ sont critiques pout la securite. Ne les remplacer que par une piece portant le numero specifie.

REF.NO.	PART NO.	DESCRIPTION	REMARK
D5006	8-719-109-93	DIODE RD6.2ESB2	
D5007	8-719-510-48	DIODE D1N20R	
D5008	8-719-510-26	DIODE D1NL20-TA	

FUSE

F5050 ⚠	1-576-193-11	FUSE	6.3A/125V
(KV-27S40/27S45/27S65/29SL40/29SL45/29SL65/29XL40M/29XL40P only)			
F5050 ⚠	1-532-506-51	FUSE	6.3A/250V
(KV-29SL40A/29SL40C/29SL65C/29XT11A only)			

TRANSISTOR

Q5001	8-729-044-30	TRANSISTOR 2SK2845-LB102	
Q5002	8-729-119-78	TRANSISTOR 2SC2785-HFE	

RESISTOR

R5001	1-249-389-11	CARBON	4.7	5%	1/4WF
R5002	1-215-485-00	METAL	470K	1%	1/4W
R5003	1-240-205-91	CARBON	22M	5%	1/2W
R5007	1-249-421-11	CARBON	2.2K	5%	1/4W
R5008	1-249-429-11	CARBON	10K	5%	1/4W
R5009	1-249-437-11	CARBON	47K	5%	1/4W
R5010	1-249-415-11	CARBON	680	5%	1/4W
R5011	1-260-302-51	CARBON	6.8	5%	1/2W
R5012	1-249-417-11	CARBON	1K	5%	1/4W
R5013	1-249-415-11	CARBON	680	5%	1/4W
R5050	1-219-512-11	CARBON	2.2M	5%	1/2W

TRANSFORMER

T5001 ⚠	1-431-852-11	TRANSFORMER, CONVERTER (SRT)
T5050 ⚠	1-426-717-11	TRANSFORMER, LINE FILTER (LFT)

VARISTOR

VDR5050 1-801-074-41 VARISTOR ERZV10D271
(KV-27S40/27S45/27S65/29SL40/29SL45/29SL65/29XL40M/29XL40P only)

VDR5050 1-809-267-41 VARISTOR ERZV10D471
(KV-29SL40A/29SL40C/29SL65C/29XT11A only)

REF.NO.	PART NO.	DESCRIPTION	REMARK

K

*** A-1380-579-A K BOARD, COMPLETE (KV-29SL65C, 27S65, 29SL65)**

CAPACITOR

C1001	1-126-968-11	ELECT	100MF	20%	50V
C1002	1-104-664-11	ELECT	47MF	20%	25V
C1003	1-126-964-11	ELECT	10MF	20%	50V
C1004	1-126-969-11	ELECT	220MF	20%	50V
C1005	1-126-960-11	ELECT	1MF	20%	50V
C1006	1-137-368-11	FILM	0.0047MF	5%	50V
C1007	1-126-960-11	ELECT	1MF	20%	50V

CONNECTOR

CN1001*	1-691-632-11	CONNECTOR, BOARD TO BOARD 15P
CN1002*	1-564-507-11	PLUG, CONNECTOR 4P

COIL

L1001	1-408-421-00	INDUCTOR	100UH
L1002	1-410-470-11	INDUCTOR	10UH

TRANSISTOR

Q1001	8-729-119-78	TRANSISTOR 2SC2785-HFE
Q1002	8-729-026-41	TRANSISTOR 2SA933AS-QRT
Q1003	8-729-026-41	TRANSISTOR 2SA933AS-QRT
Q1004	8-729-026-41	TRANSISTOR 2SA933AS-QRT
Q1005	8-729-026-41	TRANSISTOR 2SA933AS-QRT

RESISTOR

R1001	1-247-807-31	CARBON	100	5%	1/4W
R1002	1-247-807-31	CARBON	100	5%	1/4W
R1003	1-249-434-11	CARBON	27K	5%	1/4W
R1004	1-249-436-11	CARBON	39K	5%	1/4W
R1006	1-249-419-11	CARBON	1.5K	5%	1/4W
R1007	1-247-863-91	CARBON	22K	5%	1/4W
R1008	1-247-863-91	CARBON	22K	5%	1/4W
R1009	1-247-863-91	CARBON	22K	5%	1/4W
R1010	1-247-863-91	CARBON	22K	5%	1/4W
R1011	1-249-414-11	CARBON	560	5%	1/4W
R1012	1-249-414-11	CARBON	560	5%	1/4W
R1013	1-247-807-31	CARBON	100	5%	1/4W
R1014	1-247-807-31	CARBON	100	5%	1/4W
R1015	1-249-419-11	CARBON	1.5K	5%	1/4W

TUNER

TU1002⚠	8-598-430-00	TUNER, FSS BTF-FA401

REF.NO.	PART NO.	DESCRIPTION			REMARK

P

***A-1190-306-A P BOARD, COMPLETE (KV-27S45, 29SL45, 29SL65C, 27S65, 29SL65)**

CAPACITOR

C3319	1-163-031-11	CERAMIC CHIP	0.01MF		50V
C3320	1-126-960-11	ELECT	1MF	20%	50V
C3321	1-163-239-11	CERAMIC CHIP	33PF	5%	50V
C3322	1-163-239-11	CERAMIC CHIP	33PF	5%	50V
C3323	1-163-031-11	CERAMIC CHIP	0.01MF		50V
C3324	1-126-967-11	ELECT	47MF	20%	16V
C3328	1-126-967-11	ELECT	47MF	20%	16V
C3329	1-126-967-11	ELECT	47MF	20%	16V
C3330	1-163-031-11	CERAMIC CHIP	0.01MF		50V
C3331	1-126-967-11	ELECT	47MF	20%	16V
C3332	1-104-664-11	ELECT	47MF	20%	25V
C3334	1-163-031-11	CERAMIC CHIP	0.01MF		50V
C3335	1-163-038-91	CERAMIC CHIP	0.1MF		25V
C3336	1-163-038-91	CERAMIC CHIP	0.1MF		25V
C3337	1-164-005-11	CERAMIC CHIP	0.47MF		25V
C3340	1-163-031-11	CERAMIC CHIP	0.01MF		50V
C3346	1-163-251-11	CERAMIC CHIP	100PF	5%	50V
C3347	1-126-960-11	ELECT	1MF	20%	50V
C3348	1-126-967-11	ELECT	47MF	20%	16V
C3350	1-163-259-91	CERAMIC CHIP	220PF	5%	50V
C3352	1-163-031-11	CERAMIC CHIP	0.01MF		50V
C3353	1-164-346-11	CERAMIC CHIP	1MF		16V
C3354	1-163-031-11	CERAMIC CHIP	0.01MF		50V
C3355	1-126-967-11	ELECT	47MF	20%	16V
C3359	1-163-038-91	CERAMIC CHIP	0.1MF		25V
C3360	1-163-038-91	CERAMIC CHIP	0.1MF		25V
C3361	1-163-038-91	CERAMIC CHIP	0.1MF		25V
C3362	1-126-967-11	ELECT	47MF	20%	16V
C3363	1-163-031-11	CERAMIC CHIP	0.01MF		50V
C3364	1-163-231-11	CERAMIC CHIP	15PF	5%	50V
C3365	1-163-133-00	CERAMIC CHIP	470PF	5%	50V
C3366	1-164-005-11	CERAMIC CHIP	0.47MF		25V
C3367	1-126-963-11	ELECT	4.7MF	20%	50V
C3368	1-164-005-11	CERAMIC CHIP	0.47MF		25V
C3369	1-163-251-11	CERAMIC CHIP	100PF	5%	50V
C3370	1-164-346-11	CERAMIC CHIP	1MF		16V
C3371	1-163-017-00	CERAMIC CHIP	0.0047MF	10%	50V
C3372	1-164-005-11	CERAMIC CHIP	0.47MF		25V

REF.NO.	PART NO.	DESCRIPTION			REMARK

CONNECTOR

CN3301*	1-691-632-11	CONNECTOR, BOARD TO BOARD 15P			

IC

IC3302	8-759-231-53	IC TA7805S			
IC3303	8-759-438-61	IC SDA9288X-A141			
IC3304	8-752-078-83	IC CXA2019Q			

COIL

L3302	1-410-473-11	INDUCTOR	18UH		

TRANSISTOR

Q3301	8-729-422-27	TRANSISTOR 2SD601A-Q			
Q3307	8-729-422-27	TRANSISTOR 2SD601A-Q			
Q3309	8-729-422-27	TRANSISTOR 2SD601A-Q			
Q3310	8-729-422-27	TRANSISTOR 2SD601A-Q			
Q3312	8-729-216-22	TRANSISTOR 2SA1162-G			
Q3314	8-729-216-22	TRANSISTOR 2SA1162-G			

RESISTOR

R3301	1-216-295-91	SHORT			
R3302	1-216-295-91	SHORT			
R3312	1-216-037-00	RES, CHIP	330	5%	1/10W
R3313	1-216-295-91	SHORT			
R3314	1-216-049-91	RES, CHIP	1K	5%	1/10W
R3322	1-216-295-91	SHORT			
R3324	1-216-295-91	SHORT			
R3329	1-216-069-00	RES, CHIP	6.8K	5%	1/10W
R3330	1-216-035-00	RES, CHIP	270	5%	1/10W
R3331	1-216-295-91	SHORT			
R3335	1-216-295-91	SHORT			
R3337	1-216-033-00	RES, CHIP	220	5%	1/10W
R3338	1-216-033-00	RES, CHIP	220	5%	1/10W
R3339	1-216-057-00	RES, CHIP	2.2K	5%	1/10W
R3340	1-216-041-00	RES, CHIP	470	5%	1/10W
R3341	1-216-057-00	RES, CHIP	2.2K	5%	1/10W
R3342	1-216-057-00	RES, CHIP	2.2K	5%	1/10W
R3343	1-216-073-00	RES, CHIP	10K	5%	1/10W
R3344	1-216-065-91	RES, CHIP	4.7K	5%	1/10W
R3346	1-216-049-91	RES, CHIP	1K	5%	1/10W

COMPLETE PARTS LISTING P HZ

Note:

The components identified with shading and a critical symbol (⚠) are critical for safety. Replace only with part number specified.

Note:

Les composants identifies per un trame et une marque ⚠ sont critiques pout la securite. Ne les remplacer que par une piece portant le numero specifie.

REF.NO.	PART NO.	DESCRIPTION			REMARK
R3347	1-216-073-00	RES, CHIP	10K	5%	1/10W
R3352	1-216-049-91	RES, CHIP	1K	5%	1/10W
R3358	1-216-295-91	SHORT			
R3360	1-216-295-91	SHORT			
R3362	1-216-043-91	RES, CHIP	560	5%	1/10W
R3363	1-216-043-91	RES, CHIP	560	5%	1/10W
R3364	1-216-043-91	RES, CHIP	560	5%	1/10W
R3369	1-216-053-00	RES, CHIP	1.5K	5%	1/10W
R3370	1-216-053-00	RES, CHIP	1.5K	5%	1/10W
R3371	1-216-033-00	RES, CHIP	220	5%	1/10W
R3375	1-216-037-00	RES, CHIP	330	5%	1/10W
R3376	1-216-071-00	RES, CHIP	8.2K	5%	1/10W
R3377	1-216-073-00	RES, CHIP	10K	5%	1/10W
R3378	1-216-053-00	RES, CHIP	1.5K	5%	1/10W
R3379	1-216-077-00	RES, CHIP	15K	5%	1/10W
R3380	1-216-025-91	RES, CHIP	100	5%	1/10W
R3381	1-216-025-91	RES, CHIP	100	5%	1/10W
R3382	1-216-057-00	RES, CHIP	2.2K	5%	1/10W
R3383	1-216-025-91	RES, CHIP	100	5%	1/10W
R3384	1-216-033-00	RES, CHIP	220	5%	1/10W
R3385	1-216-109-00	RES, CHIP	330K	5%	1/10W
R3387	1-216-295-91	SHORT			
R3388	1-216-295-91	SHORT			
R3392	1-216-295-91	SHORT			
R3393	1-216-025-91	RES, CHIP	100	5%	1/10W
R3394	1-216-025-91	RES, CHIP	100	5%	1/10W
R3395	1-216-061-00	RES, CHIP	3.3K	5%	1/10W
R3401	1-216-295-91	SHORT			

CRYSTAL

X3302	1-760-095-21	VIBRATOR, CRYSTAL
X3303	1-577-611-11	OSCILALTOR, CERAMIC
X3304	1-567-505-11	OSCILLATOR, CRYSTAL

REF.NO. PART NO. DESCRIPTION REMARK

HZ

***A-1372-117-A HZ BOARD, COMPLETE (KV-29XT11A, 29SL40A)**

CONNECTOR

CN901	*	1-580-843-11	PIN, CONNECTOR (POWER)
CN902	*	1-580-843-11	PIN, CONNECTOR (POWER)

SWITCH

S901	⚠	1-571-433-21	SWITCH, PUSH (AC POWER)

ACCESSORIES AND PACKING MATERIAL

3-861-824-41		MANUAL, INSTRUCTION	KV-29XT11A/29SL40A (only)
3-861-907-21		MANUAL, INSTRUCTION	KV-27S40/27S45/27S65 (US models only)
3-861-907-31		MANUAL, INSTRUCTION	KV-27S40/27S45/27S65 (CND models only)
3-861-918-41		MANUAL, INSTRUCTION	KV-29SL40/29XL40M/29XL40P/29SL40C/ 29SL45/29SL65C/29SL65 (only)
4-041-255-01	*	BAG, PROTECTION	
4-064-061-01	*	CARTON, INDIVIDUAL	KV-29XL40M/29XT11A (only)
4-064-062-01	*	CARTON, INDIVIDUAL	KV-29SL40/29SL40C/29SL45/29SL65C/ 29SL65/29SL40A (only)
4-064-063-01	*	CARTON, INDIVIDUAL	KV-29XL40P (only)
4-064-065-01	*	CARTON, INDIVIDUAL	KV-27S40/27S45/27S65 (only)
4-064-069-01	*	CUSHION ASSY, UPPER	
4-064-071-01	*	CUSHION ASSY, LOWER	

REMOTE COMMANDER

1-475-801-11	REMOTE COMMANDER (RM- Y165)	KV-27S40/29SL40/29XL40M/ 29XL40P/29XT11A/29SL40C/ 29SL40A (only)
1-475-802-11	REMOTE COMMANDER (RM-Y167)	KV-27S45/27S65/29SL45/ 29SL65C/29SL65 (only)
4-978-977-01	BATTERY COVER (for remote)	

Sony Corporation

Sony Technology Center

Product Quality Division

Service Promotion Department

9-965-841-01

English

98DJ74425-1

Printed in U.S.A.