Installing the Battery 2
Low Battery Indications 3
Setting The Channel 3
Using More Than One Wireless System 4
Operation 6
Using the Standby Setting 7
Specifications 7

3-Channel 170MHz Wireless Microphone

32-1230A B OWNER'S MANUAL — Please read before using this equipment.

Your RadioShack 3-Channel 170MHz Wireless Microphone is designed for use as a public address microphone or for professional music performances.

- The system's long range (150 feet), high fidelity frequency response (100 – 10,000 Hz), wide dynamic range (90 dB), and low distortion (1.0%) let you use it anywhere you would use a conventional microphone.
- The microphone's low battery indicator and three-position switch (**ON/STBY/OFF**) help you avoid last minute battery failures.
- The selectable channel switch allows you to use more than one wireless microphone system in the same location.

This professional quality multi-channel system is designed for both single and multiple performer applications. Up to three different people can perform at the same time, without microphone interference. Each performer uses one microphone and one receiver. Since the microphones and receivers are available separately, you can mix and match

RadioShack®
www.radioshack.com℠

© 2001 RadioShack Corporation. All Rights Reserved. RadioShack and RadioShack.com are trademarks used by RadioShack Corporation.

the mics and receivers that have the features that best fit your needs.

This device complies with Part 90 of the *FCC Rules*. There are a total of eight frequencies available for this microphone. Each microphone has channels that can operate on three of these frequencies. You must get a license for each frequency you plan to use before you use the microphone. Licensing eligibility depends on how you will use the microphone. Contact your nearest FCC office to get the necessary application.

INSTALLING THE BATTERY

The microphone's transmitter is powered by a single 9-volt battery. For the longest battery life, we recommend an alkaline battery.

Caution: Use only fresh batteries of the required size and recommended type.

1. While holding the body of the microphone, carefully unscrew the ball grill assembly far enough to remove the battery door.

2. Insert the battery into the battery compartment on top of the ribbon, being sure the + and – terminals are connected correctly as shown on the inside of the battery compartment.

3. Replace the battery compartment cover and tighten the ball grill assembly.

Low Battery Indications

The microphone's BATT LOW indicator tells you the condition of the battery.

If the indicator flickers when you move the microphone's switch from **OFF** to **STBY**, the battery is good.

If the indicator lights when you are using the microphone (in the **ON** or **STBY** position), battery power is low and you should replace the battery.

Warning: Dispose of old batteries promptly and properly. Do not burn or bury them.

Caution: If you do not plan to use the microphone for several weeks, remove the battery. Batteries can leak chemicals that can destroy electronic parts.

SETTING THE CHANNEL

Your transmitter can transmit on three different channels so you can use more than one system at the same time without interference. If you intend to operate more than one system, you must set a different channel for each transmitter and receiver system. Each channel frequency is identified by a different letter. If your transmitter is set to

channel **B**, your receiver must also be set to channel **B**. Do not operate two systems in the same location on the same channel or on adjacent channels.

Notes:

- System microphones are sold in three channel combinations:

  A E H, B D G, or C F H

- If you are using only one system, you do not have to change the transmitter channel. Instead, set the receiver channel to match the transmitter channel.

Using More Than One Wireless System

If you intend to use more than two wireless microphone systems in the same location, follow the recommended channel combinations listed for best performance.

Combinations	Combinations
1: C E H	5: B D H
2: A C F	6: C F H
3: A D F	7: B E G
4: B D G	8: B E H

Important: Always use the **STBY** setting on your transmitter to mute a microphone. Using the **STBY** setting

minimizes interference when you use more than one wireless system.

To set the transmitter channel, do the following.

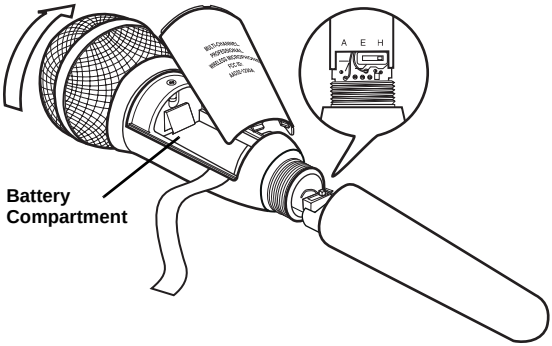

1. While holding the body of the microphone, carefully unscrew and remove the tapered lower section of the microphone.

   Caution: Static electricity can damage your microphone. To avoid possible damage, you should discharge any static electricity from your body by touching a faucet or other grounded metal object before you set the transmitter channel.

2. Set the transmitter switch to the desired channel. Do not handle the printed circuit board or remove the protective shield.

3. Replace the lower section of the microphone body.

OPERATION

1. Fully extend the receiver's antenna.

2. Turn on your amplifier, tape recorder, mixing board, and other necessary components of your audio system. Set the volume control (or input level controls) to moderate settings.

3. Set the receiver's volume control to its minimum setting.

4. Press the receiver's power button to the on position. The green power indicator lights.

5. Set the receiver channel switch to the same channel as the transmitter.

6. Set the microphone's **ON/STBY/OFF** switch to **ON**. The receiver's red READY indicator lights.

7. Begin talking into the microphone and adjust the receiver's volume control to the desired level.

Note: Experiment with the receiver's volume setting and the settings of other components in your audio system to obtain the best results.

Using the Standby Setting

The microphone's **STBY** setting lets you turn off the microphone without turning off the microphone's transmitter.

If you move the switch from **ON** or **STBY** to **OFF** while your amplifier is on, there is a loud pop. There is no pop when you move the switch from **STBY** to **ON**, or from **ON** to **STBY**.

To conserve battery power, be sure to set the switch to **OFF** when you finish using the microphone.

SPECIFICATIONS

Sensitivity	100 dB SPL @ ± 7 kHz FM
Frequency Response	100 – 10,000 Hz
RF Output Power	50 mW (Max)
Current Consumption	30 mA (Average)
Battery Life (Alkaline)	8 Hours (Average)
Dimensions (Diameter × Length)	$2^{3}/_{8} \times 9^{11}/_{16}$ Inches (61 × 246 mm)

Operating Frequencies

Channel	Frequency (MHz)
A	169.445
B	169.505
C	170.245
D	170.305

E.....171.045
F.....171.105
G.....171.845
H.....171.905

Limited Ninety-Day Warranty

This product is warranted by RadioShack against manufacturing defects in material and workmanship under normal use for ninety (90) days from the date of purchase from RadioShack company-owned stores and authorized RadioShack franchisees and dealers. EXCEPT AS PROVIDED HEREIN, RadioShack MAKES NO EXPRESS WARRANTIES AND ANY IMPLIED WARRANTIES, INCLUDING THOSE OF MERCHANTABILITY AND FITNESS FOR A PARTICULAR PURPOSE, ARE LIMITED IN DURATION TO THE DURATION OF THE WRITTEN LIMITED WARRANTIES CONTAINED HEREIN. EXCEPT AS PROVIDED HEREIN, RadioShack SHALL HAVE NO LIABILITY OR RESPONSIBILITY TO CUSTOMER OR ANY OTHER PERSON OR ENTITY WITH RESPECT TO ANY LIABILITY, LOSS OR DAMAGE CAUSED DIRECTLY OR INDIRECTLY BY USE OR PERFORMANCE OF THE PRODUCT OR ARISING OUT OF ANY BREACH OF THIS WARRANTY, INCLUDING, BUT NOT LIMITED TO, ANY DAMAGES RESULTING FROM INCONVENIENCE, LOSS OF TIME, DATA, PROPERTY, REVENUE, OR PROFIT OR ANY INDIRECT, SPECIAL, INCIDENTAL, OR CONSEQUENTIAL DAMAGES, EVEN IF RadioShack HAS BEEN ADVISED OF THE POSSIBILITY OF SUCH DAMAGES.

Some states do not allow limitations on how long an implied warranty lasts or the exclusion or limitation of incidental or consequential damages, so the above limitations or exclusions may not apply to you.

In the event of a product defect during the warranty period, take the product and the RadioShack sales receipt as proof of purchase date to any RadioShack store. RadioShack will, at its option, unless otherwise provided by law: (a) correct the defect by product repair without charge for parts and labor; (b) replace the product with one of the same or similar design; or (c) refund the purchase price. All replaced parts and products, and products on which a refund is made, become the property of RadioShack. New or reconditioned parts and products may be used in the performance of warranty service. Repaired or replaced parts and products are warranted for the remainder of the original warranty period. You will be charged for repair or replacement of the product made after the expiration of the warranty period.

This warranty does not cover: (a) damage or failure caused by or attributable to acts of God, abuse, accident, misuse, improper or abnormal usage, failure to follow instructions, improper installation or maintenance, alteration, lightning or other incidence of excess voltage or current; (b) any repairs other than those provided by a RadioShack Authorized Service Facility; (c) consumables such as fuses or batteries; (d) cosmetic damage; (e) transportation, shipping or insurance costs; or (f) costs of product removal, installation, set-up service adjustment or reinstallation.

This warranty gives you specific legal rights, and you may also have other rights which vary from state to state.

RadioShack Customer Relations, 200 Taylor Street, 6th Floor, Fort Worth, TX 76102

12/99

09A01 AO0075AAA1
32-1230A B Printed in China