Model No. WESY78732
Serial No. _____

Write the serial number in the space above for future reference.

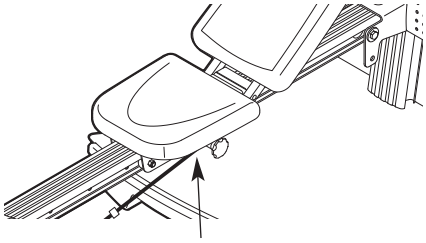

Serial Number Decal (under seat)

QUESTIONS?

As a manufacturer, we are committed to providing complete customer satisfaction. If you have questions, or if there are missing or damaged parts, we will guarantee complete satisfaction through direct assistance from our factory.

TO AVOID DELAYS, PLEASE CALL DIRECT TO OUR TOLL-FREE CUSTOMER HOT LINE. The trained technicians on our customer hot line will provide immediate assistance, free of charge.

CUSTOMER HOT LINE:
1-877-992-5999
Mon.–Fri., 6 a.m.–6 p.m. MST

⚠ CAUTION

Read all precautions and instructions in this manual before using this equipment. Save this manual for future reference.

W E I D E R®

PLATINUM

USER'S MANUAL

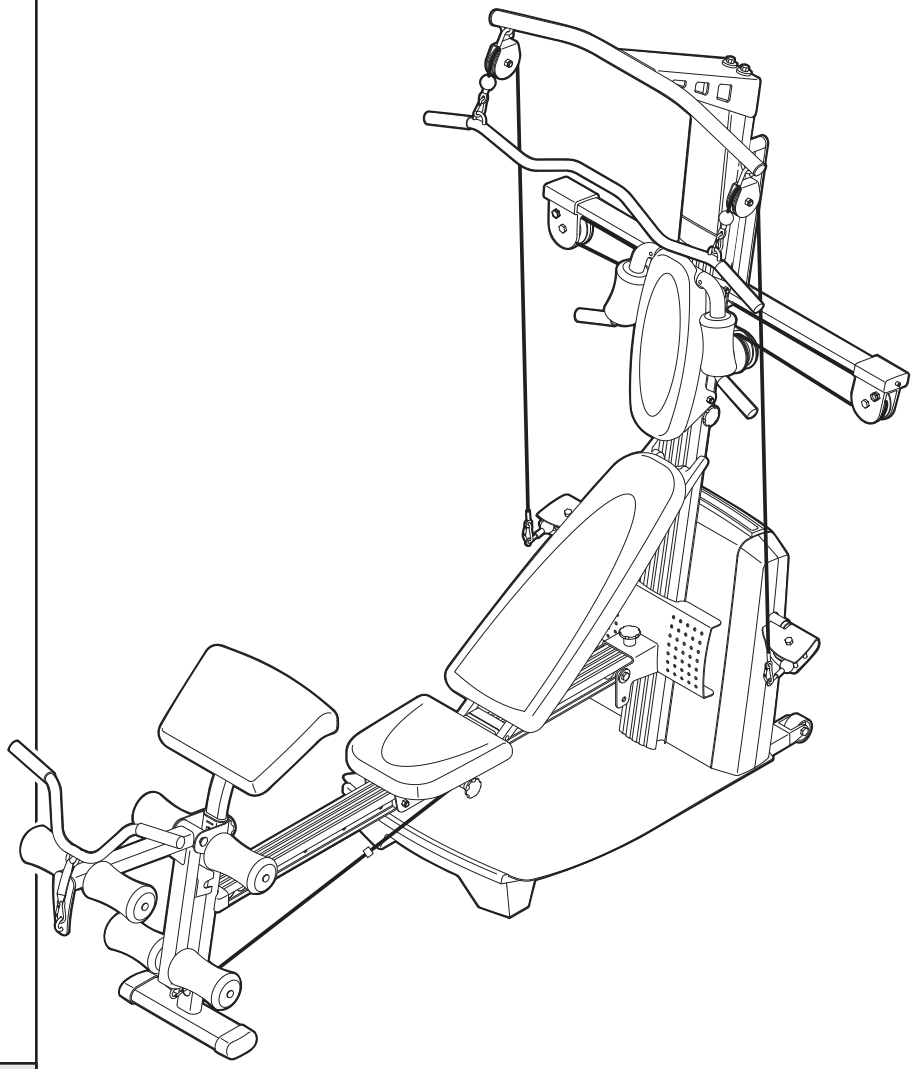

Visit our website at

www.weiderplatinum.com

TABLE OF CONTENTS

WARNING DECAL PLACEMENT 3
IMPORTANT PRECAUTIONS 4
BEFORE YOU BEGIN 5
ASSEMBLY 6
UPPER CABLE ADJUSTMENT 12
ADJUSTMENTS 13
CONSOLE OPERATION 17
CABLE DIAGRAM 19
TROUBLESHOOTING 20
EXERCISE GUIDELINES 21
ORDERING REPLACEMENT PARTS . . . . . .Back Cover
LIMITED WARRANTY . . . . . Back Cover

Note: A PART IDENTIFICATION CHART and a PART LIST/EXPLODED DRAWING are attached in the center of this manual. Remove the PART IDENTIFICATION CHART and PART LIST/EXPLODED DRAWING before beginning assembly.

WEIDER is a registered trademark of ICON Health & Fitness, Inc.

WARNING DECAL PLACEMENT

The decals shown here have been placed on the resistance system. If a decal is missing or illegible, please call our Customer Service Department toll-free at 1-877-992-5999, Monday through Friday, 6 a.m. until 6 p.m. Mountain Time, to order a free replacement decal. Apply the decal in the location shown.

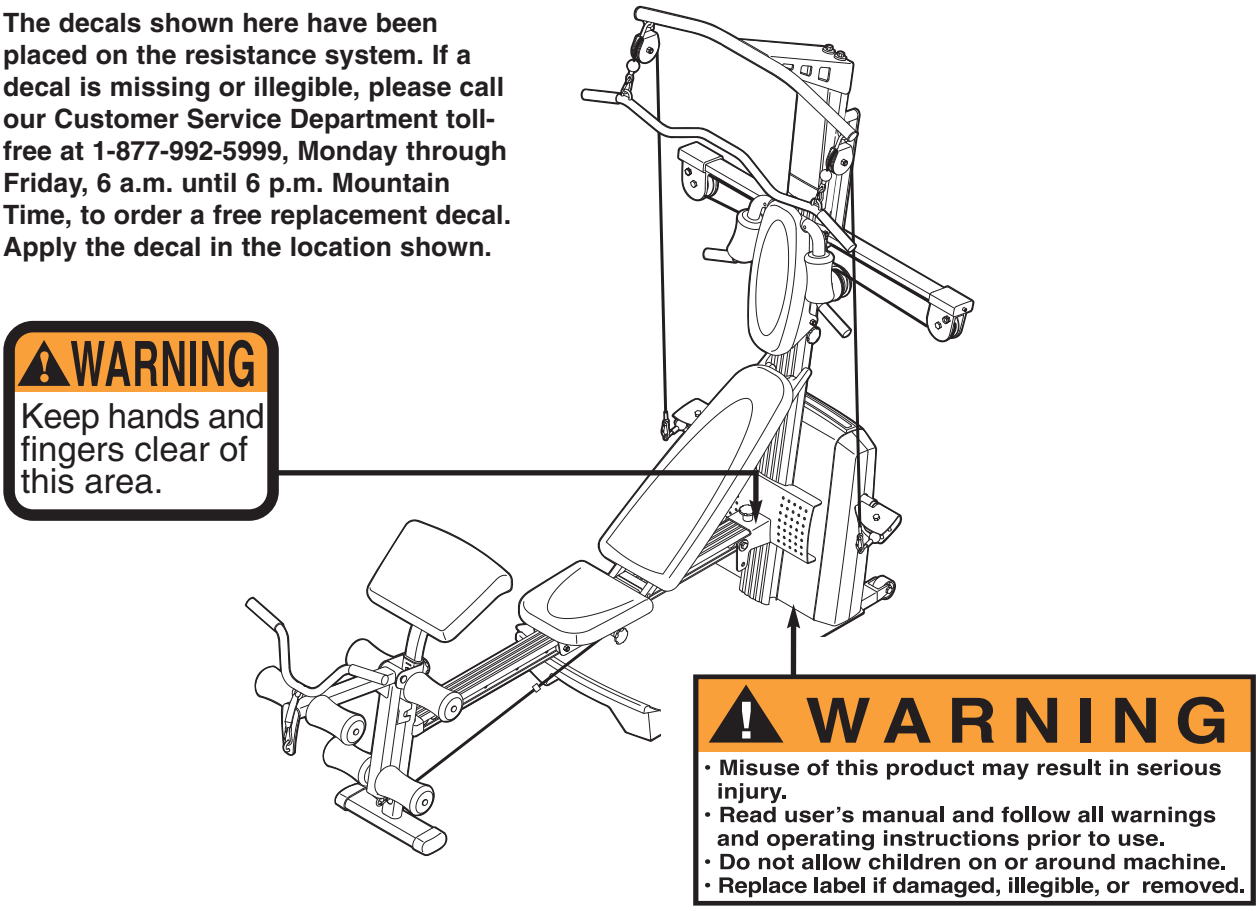

IMPORTANT PRECAUTIONS

⚠WARNING: To reduce the risk of serious injury, read the following important precautions before using the resistance system.

1. Read all instructions in this manual before using the resistance system. Use the resistance system only as described in this manual.
2. It is the responsibility of the owner to ensure that all users of the resistance system are adequately informed of all precautions.
3. The resistance system is intended for home use only. Do not use the resistance system in any commercial, rental, or institutional setting.
4. Use the resistance system only on a level surface. Cover the floor beneath the resistance system to protect the floor.
5. Make sure that all parts are properly tightened each time the resistance system is used. Replace any worn parts immediately.
6. Keep children under 12 and pets away from the resistance system at all times.
7. Keep hands and feet away from moving parts.
8. Always wear athletic shoes for foot protection while exercising.
9. The resistance system is designed to support a maximum user weight of 300 pounds.
10. The crossbar on the top frame is not designed to be used for pull-up exercises. Do not hang on the crossbar.
11. Pull on the lower cable only while sitting on the bench or standing on the base plate. Pull on the high cables only while sitting on the bench, with the seat in one of the three positions closest to the upright base, or while standing on the base plate.
12. The resistance system is designed to be used with the included resistance. Do not use the resistance system with any other type of resistance.
13. Always disconnect the lat bar from the high cables when performing an exercise that does not require it.
14. Make sure the storage knob is in place and fully tightened each time the resistance system is used.
15. Make sure that the cables remain on the pulleys at all times. If the cables bind as you are exercising, stop immediately and make sure that the cables are on the pulleys.
16. Do not pull on the cables while the resistance level is being adjusted.
17. If you feel pain or dizziness while exercising, stop immediately and begin cooling down.

⚠WARNING: Before beginning this or any exercise program, consult your physician. This is especially important for persons over the age of 35 or persons with pre-existing health problems. Read all instructions before using. ICON assumes no responsibility for personal injury or property damage sustained by or through the use of this product.

BEFORE YOU BEGIN

Thank you for selecting the innovative WEIDER® PLATINUM resistance system. The resistance system offers a selection of stations designed to develop every major muscle group of the body. Whether your goal is to tone your body, build dramatic muscle size and strength, or improve your cardiovascular system, the resistance system will help you to achieve the specific results you want.

For your benefit, read this manual carefully before using the resistance system. If you have questions after reading this manual, please call our Customer Service Department toll-free at 1-877-992-5999, Monday through Friday, 6 a.m. until 6 p.m. Mountain Time (excluding holidays). To help us assist you, please note the product model number and serial number before calling. The model number is WESY78732. The serial number can be found on a decal attached to the resistance system (see the front cover of this manual).

Before reading further, please review the drawing below and familiarize yourself with the parts that are labeled.

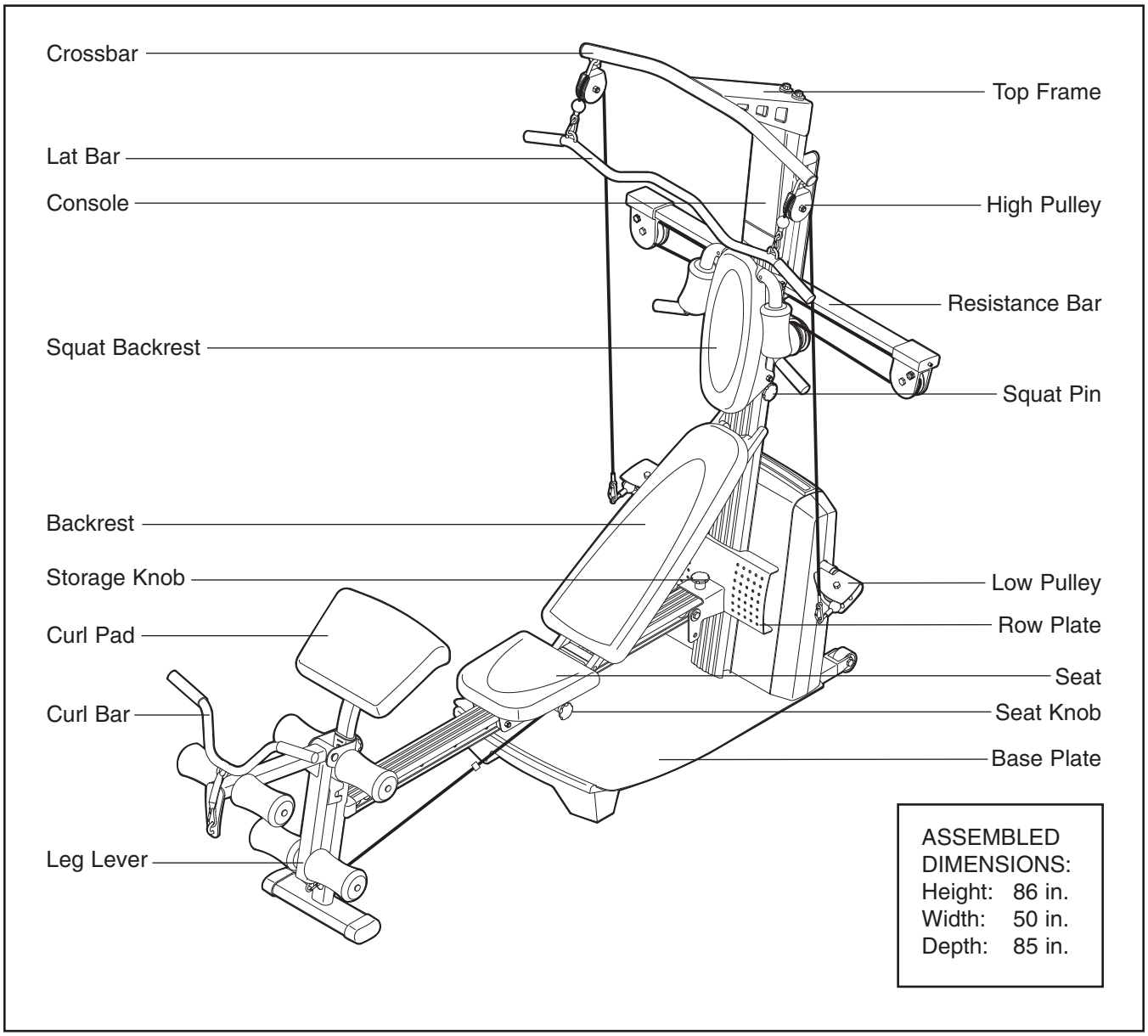

ASSEMBLY

Make Things Easier for Yourself

This manual is designed to ensure that the resistance system can be assembled successfully by most people. However, it is important to realize that the versatile resistance system has many parts and that the assembly process will take time. Most people find that by setting aside plenty of time, assembly will go smoothly.

Before beginning assembly, carefully read the following information and instructions:

- Assembly requires two persons.
- Place all parts in a cleared area and remove the packing materials. Do not dispose of the packing materials until assembly is completed.
- ***For help identifying small parts, use the PART IDENTIFICATION CHART.*** Note: Some small parts may have been pre-attached for shipping. If a part is not in the parts bag, check to see if it has been pre-attached.
- Tighten all parts as you assemble them, unless instructed to do otherwise.
- As you assemble the resistance system, make sure all parts are oriented as shown in the drawings.

The included Allen wrenches and the following tools (not included) are required for assembly:

- **Two adjustable wrenches**
- **One rubber mallet**
- **One standard screwdriver**
- **One Phillips screwdriver**
- **Lubricant, such as grease or petroleum jelly, and soapy water.**

Assembly will be more convenient if you have a socket set, a set of open-end or closed-end wrenches, or a set of ratchet wrenches.

1. **Before beginning assembly, make sure that you have read and understand the information in the box above. Refer to the PART IDENTIFICATION CHART for help identifying small parts.**

   Pull the lower end of the Upper Wire Harness (71) out of the hole in the back of the Upright (2).

   Attach the Upright (2) to the Base Plate (1) with an M10 x 25mm Button Screw (88), an M10 Washer (106), an M10 x 92mm Button Bolt (83), and an M10 Nylon Locknut (103).

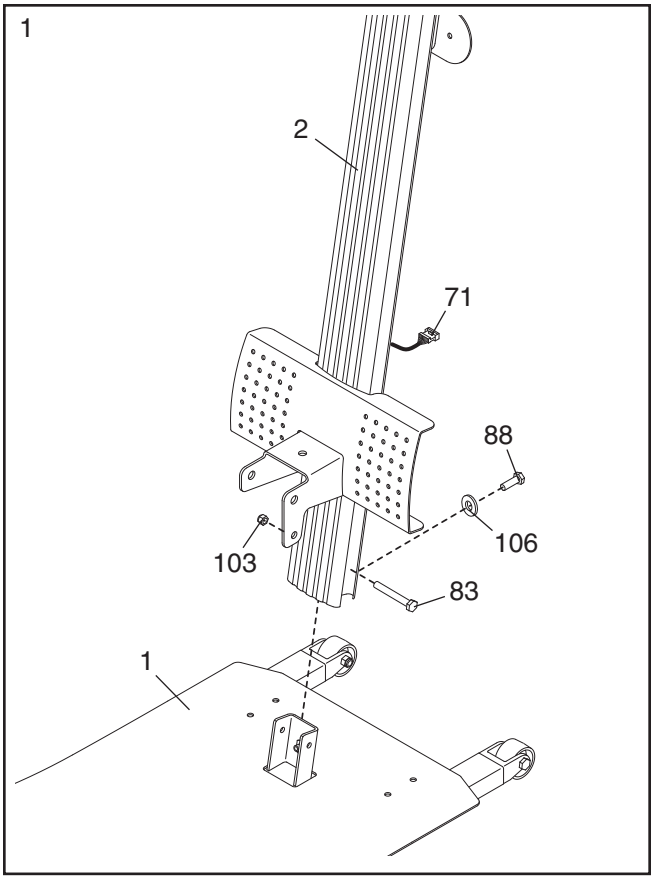

2. Insert the connector of the Upper Wire Harness (71) into the socket of the lower wire harness (C). **The connector should slide easily into the socket and snap into place.** If the connector does not slide easily and snap into place, turn the connector over and then insert it.

   Make sure that the connector and wires appear as shown in the inset drawing. **IF THE CONNECTOR IS NOT INSERTED PROPERLY, THE CONSOLE MAY BE DAMAGED WHEN THE POWER IS TURNED ON.**

   Insert the Mech Frame (6) into the Base Plate (1). Attach the Mech Frame to the Upright (2) with a 1/2" x 25mm Screw (85) and a 1/2" Lock Washer (12). **Do not tighten the Screw yet.**

   Attach the Mech Frame (6) to the Base Plate (1) with four M10 Nylon Locknuts (103).

   Tighten the 1/2" x 25mm Screw (85).

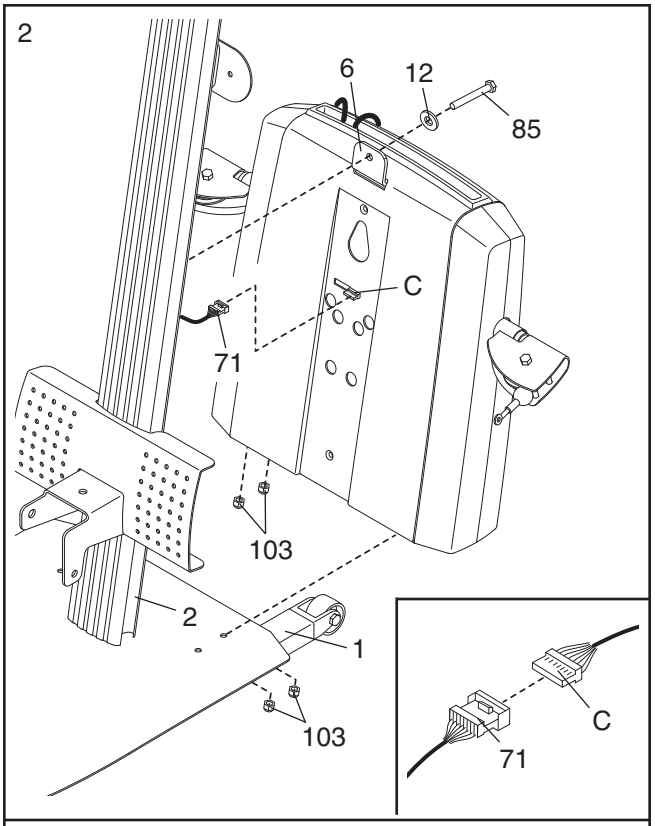

3. Press the Rail Cap (49) onto the Leg (5). Attach the Leg to the Rail (4) with two M10 x 64mm Button Bolts (80), four M10 Washers (106), and two M10 Nylon Locknuts (103).

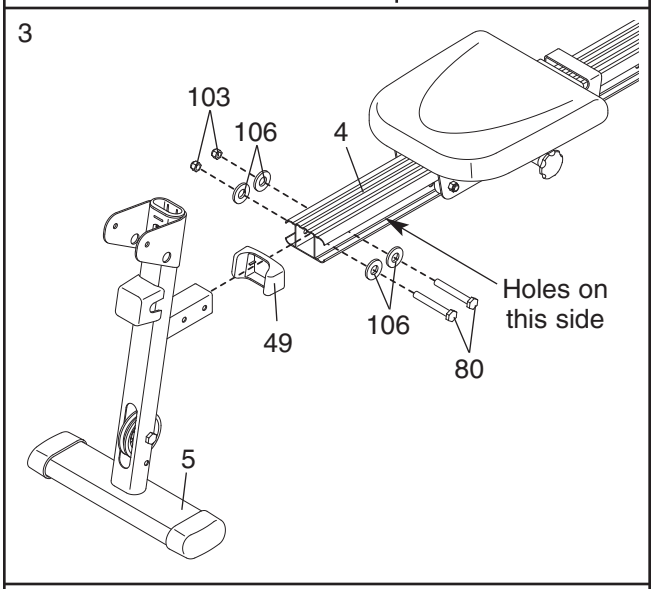

4. Lubricate an M10 x 125mm Button Bolt (89) with grease. Attach the Rail (4) to the Row Plate (28) with the Bolt, two M10 Washers (106), two 31mm Spacers (30), and an M10 Nylon Locknut (103). **Do not overtighten the Locknut; the Rail must be able to pivot easily.**

   Tighten the Storage Knob (29) into the Row Plate (28) and the Rail (4).

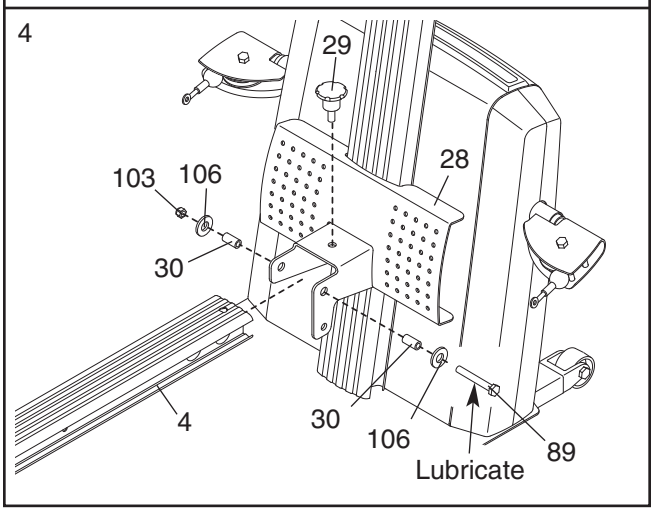

5. Insert the Squat Pin (66) into the Upright (2).

   Slide the Squat Carriage (19) onto the Upright (2).

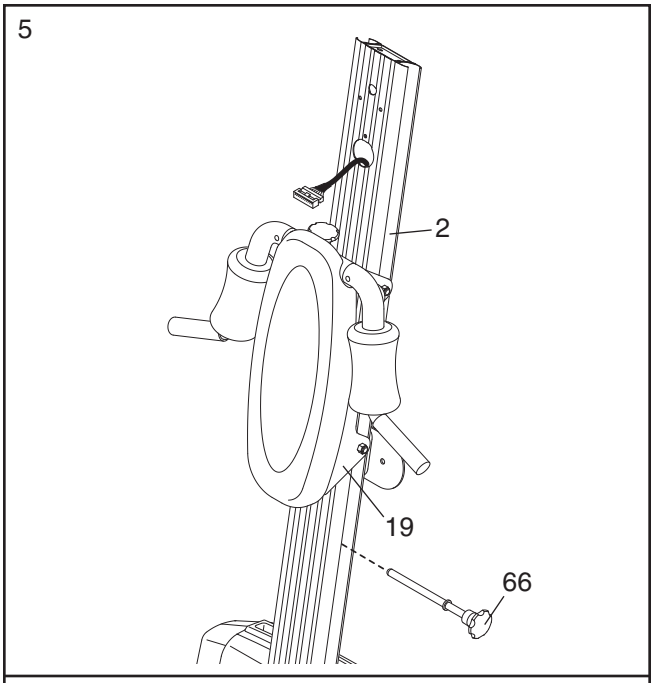

6. Attach the Top Frame (37) to the Upright (2) with two M10 x 25mm Button Screws (88), an M10 x 75mm Button Screw (84), three M10 Lock Washers (75), and an M10 Washer (106).

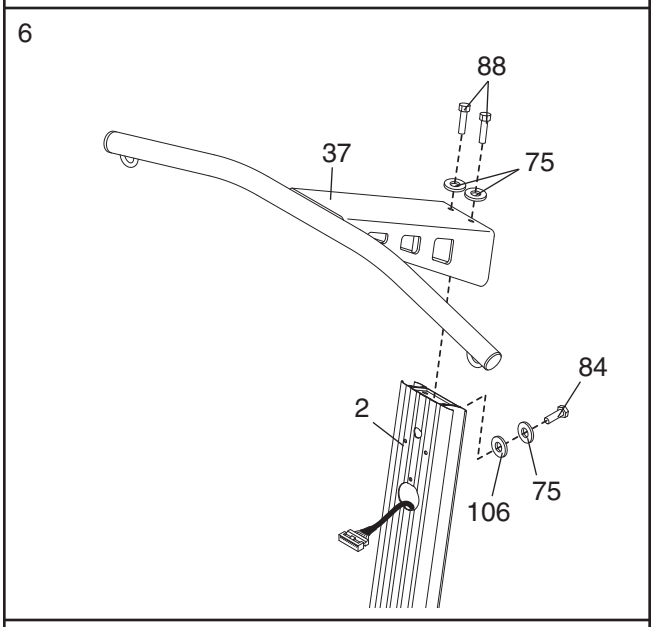

7. Pull the excess Upper Wire Harness (71) out of the Upright (2). Insert the connector on the Console (67) into the socket on the Upper Wire Harness. **The connector should slide easily into the socket and snap into place.** If the connector does not slide easily and snap into place, turn the connector over and then insert it.

   Make sure that the connector and wires appear as shown in the inset drawing. **IF THE CONNECTOR IS NOT INSERTED PROPERLY, THE CONSOLE MAY BE DAMAGED WHEN THE POWER IS TURNED ON.**

   Push the excess Upper Wire Harness (71) into the Upright (2).

   Attach the Console (67) to the Upright (2) with four M4 x 70mm Screws (114).

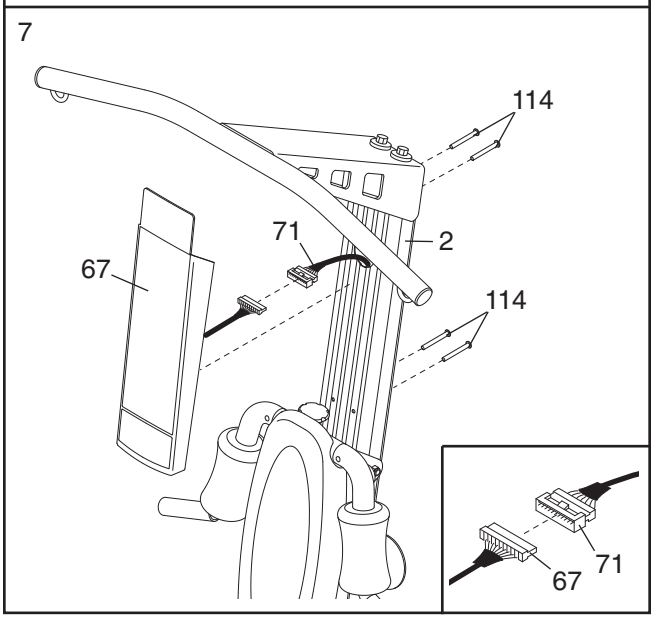

8. Attach a Large Pulley (14) and the Pulley Plate (68) to the Upright (2) with an M12 x 62mm Button Bolt (81) and an M12 Nylon Locknut (13). **Do not tighten the Locknut yet.**

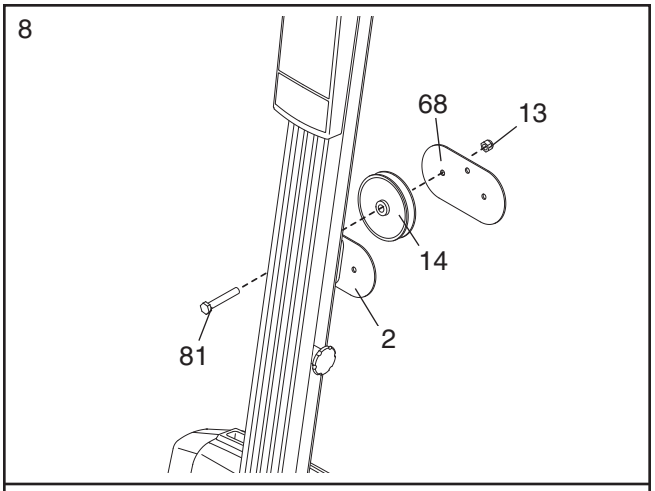

9. Pull the upper cable (A), which is attached inside of the Mech Frame (not shown), up between the Upright (2) and the Pulley Plate (68).

   Attach another Large Pulley (14) to the Upright (2) and Pulley Plate (68) with an M12 x 62mm Button Bolt (81) and an M12 Nylon Locknut (13). **Make sure that the upper cable (A) is between the two Pulleys.**

   Hold the 38mm Spacer (90) inside the loop of the upper cable (A), and between the Upright (2) and the Pulley Plate (68). Attach the Spacer with an M10 x 58mm Button Screw (11). **Make sure the ends of the cable do not wrap around each other below the Spacer and the Large Pulleys (14) used in steps 8 and 9 (refer to the CABLE DIAGRAM on page 18).**

   Tighten the M12 Nylon Locknuts (13) used in steps 8 and 9.

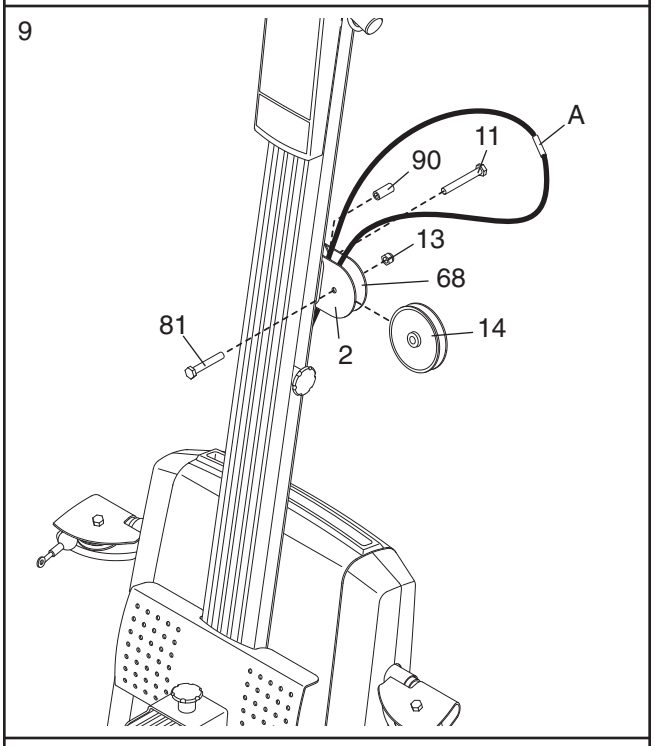

10. Attach a Small Guide Spacer (18), a Large Guide Spacer (17), and two Crossbar Guides (15) to the Upright (2) with an M10 x 152mm Bolt (86).

    Pull the upper cable (A) up between the Crossbar Guides (15). Press the metal cover on the cable into the groove in the Crossbar Block (16). Attach a Small Guide Spacer (18), the Crossbar Block, the two Crossbar Guides (15), an M10 Thick Washer (54), and the two Tethers (70) to the Upright (2) with another M10 x 152mm Bolt (86). **Do not tighten the Bolt yet.**

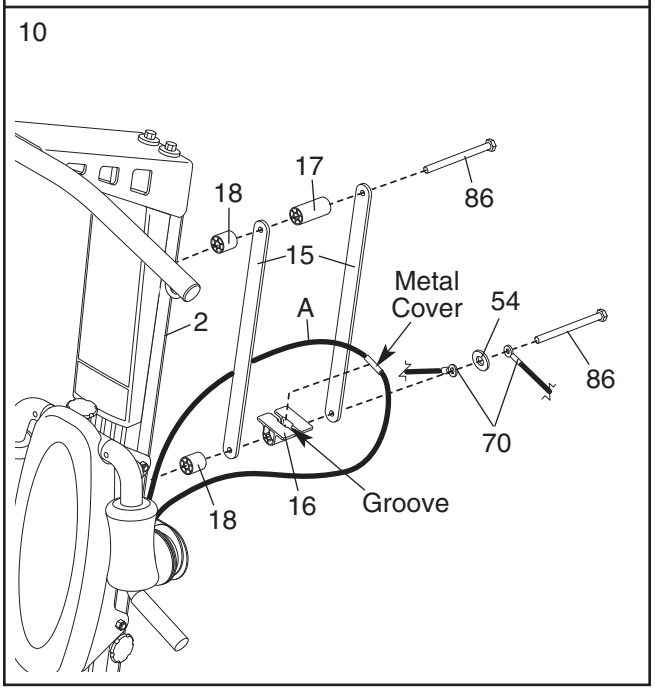

11. Insert the Resistance Bar (9) between the Crossbar Guides (15), and center it on the Crossbar Block (not shown).

    Press a Pulley Bracket (10) onto the Resistance Bar (9). Screw a 3/8” x 38mm Tension Screw (117) into the Pulley Bracket a couple of turns. **Make sure the hexagonal hole in the Screw is on the outside of the Bracket.**

    Attach a Tether (70) to the Pulley Bracket (10) at the upper hole, with an M10 x 64mm Button Bolt (80), an M10 Thick Washer (54), and an M10 Nylon Locknut (103).

    Repeat on the other side of the Resistance Bar (9). Then, tighten the lower M10 x 152mm Bolt (86) used in step 10.

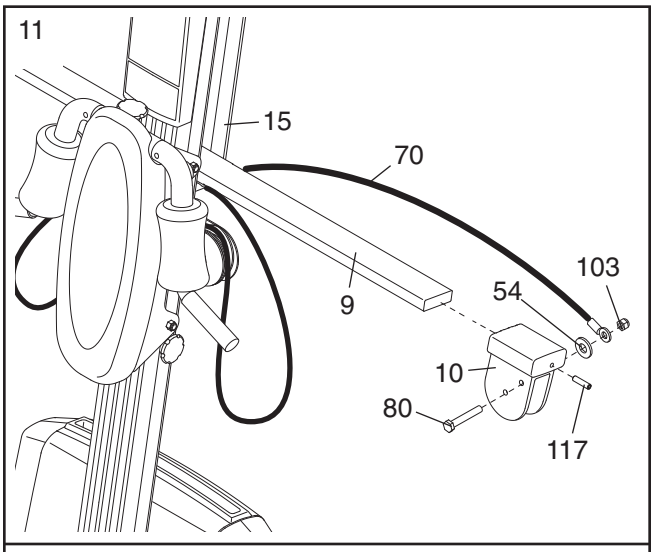

12. Hold a Large Pulley (14) inside the upper cable (A). Attach the Pulley to a Pulley Bracket (10) with an M12 x 58mm Button Bolt (87) and an M12 Nylon Locknut (13). **Make sure that the cable is routed as shown in the CABLE DIAGRAM on page 19.**

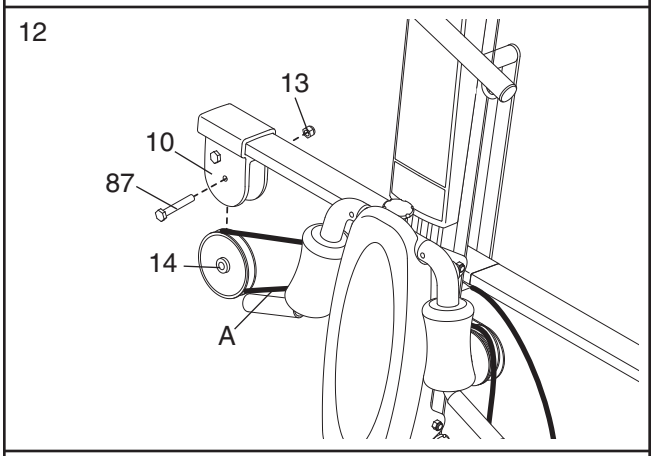

13. Hold a Large Pulley (14) inside the upper cable (A). Attach the Pulley to the other Pulley Bracket (10) with an M12 x 58mm Button Bolt (87) and an M12 Nylon Locknut (13). **Make sure that the cable is routed as shown in the CABLE DIAGRAM on page 19.**

    Tighten the two 3/8” x 38mm Tension Screws (117) an equal number of turns.

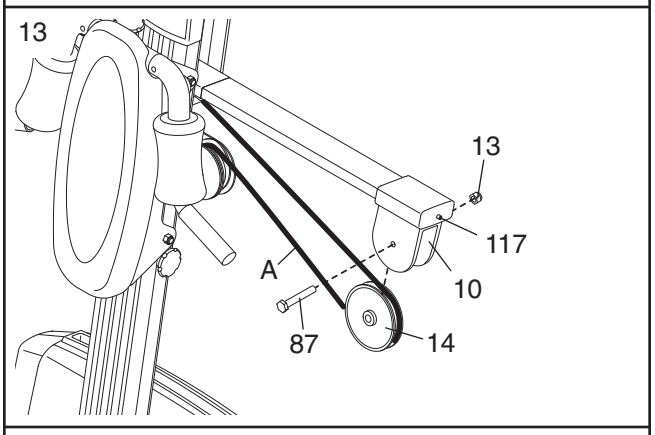

14. Attach the Leg Lever (56) to the Leg (5) with a Leg Station Pin (60). Slide a Cotter Pin (113) onto the Leg Station Pin.

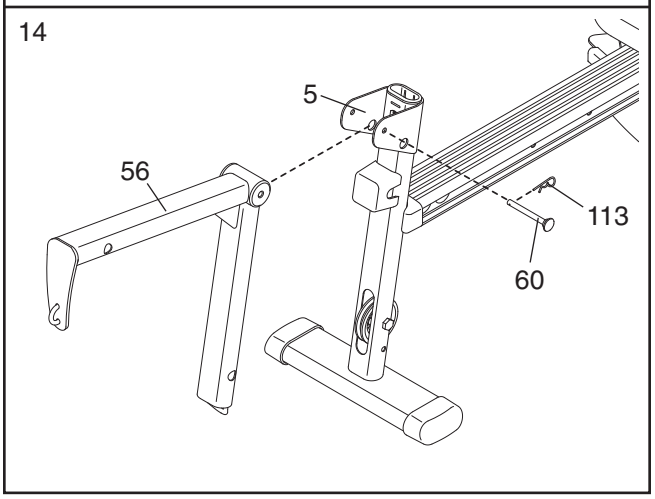

15. Slide the Pad Tube (50) into the Leg Lever (56). Slide two Large Foam Pads (52) onto the Pad Tube.

Attach the other two Pad Tubes (50) to the Leg Lever (56) and the Leg (5) in the same manner.

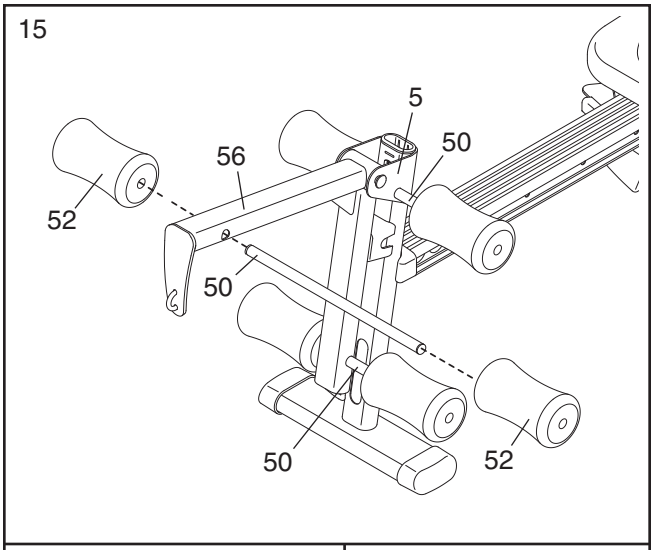

16. Insert the rod on the Backrest Frame (32) into the slot in the Seat Carriage (44). **Hold the Backrest Frame vertically over the Seat Carriage and slide the rod into the slot, as shown in the inset drawing.**

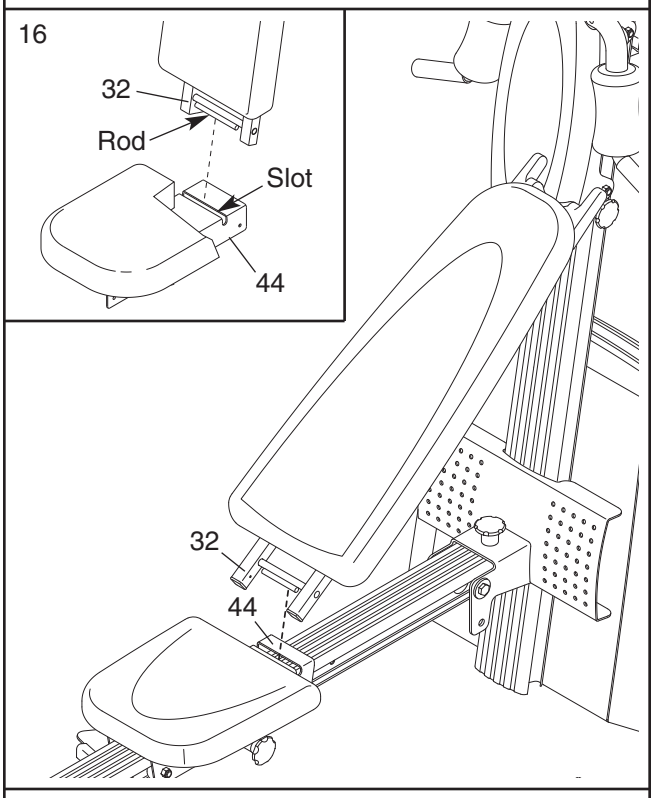

17. Attach the Curl Pad (43) to the Curl Post (42) with two M6 x 16mm Screws (41).

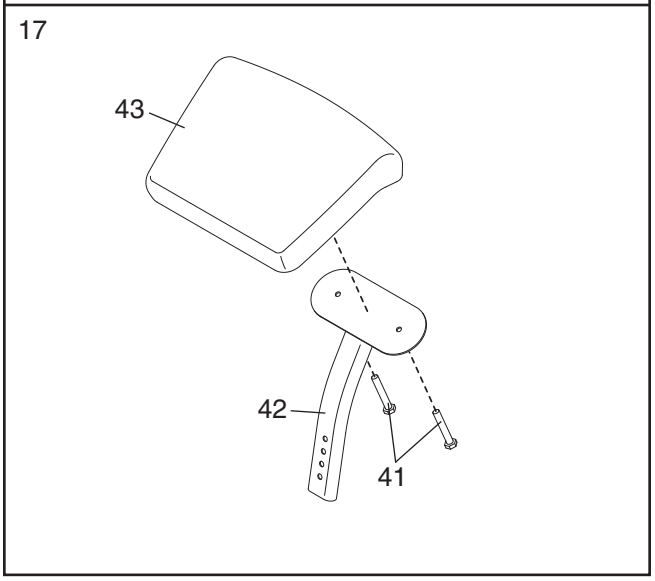

18. Adjust the tension on the upper cable (not shown) as described in UPPER CABLE ADJUSTMENT on the following page.

19. Make sure that all parts have been properly tightened. The use of the remaining parts will be explained in ADJUSTMENTS, beginning on page 13.

Before using the resistance system, turn on the console and change the resistance setting as described in CONSOLE OPERATION on page 17.

UPPER CABLE ADJUSTMENT

After completing the assembly of the resistance system, the tension on the upper cable (A) will need to be adjusted. Also, the upper cable can stretch slightly when it is first used. When this occurs, the upper cable tension will need to be readjusted. Follow the steps below to adjust the upper cable tension.

1. Connect the two Tension Gauges (118, 119) together using the magnet.

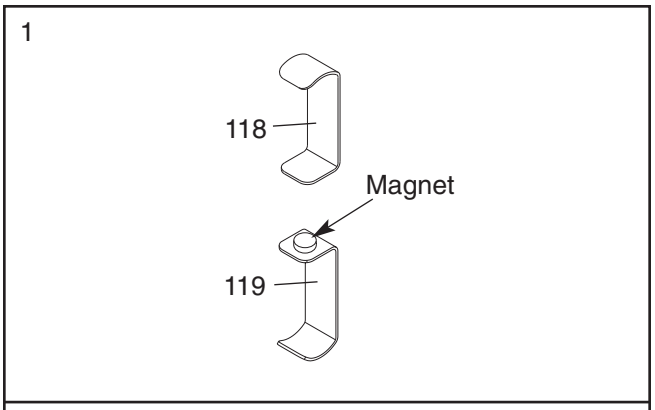

2. Plug in the resistance system as described in PLUGGING IN THE RESISTANCE SYSTEM on page 17. Use the Console (not shown) to adjust the resistance setting of the system to the highest setting, as described in Select a resistance setting on page 17.

   Squeeze the upper cable (A) together near a Large Pulley (14). Hook the ends of the Tension Gauges (118, 119) around the upper cable as shown. **Do not hook the ends of the Tension Gauges around the Tether (70); which is attached to the back of the Pulley Bracket (10).**

   Slide the Tension Gauges (118, 119) next to the Large Pulley (14) as shown in the inset drawing.

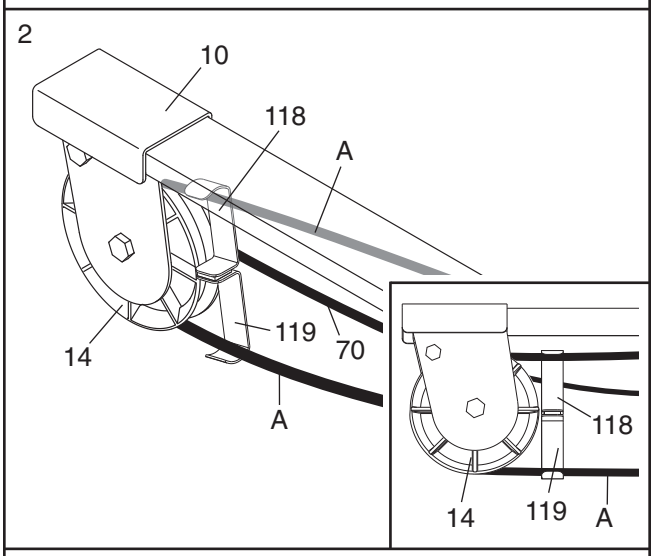

3. Locate the 3/8” x 38mm Tension Screw (117) on each end of the Resistance Bar (9). Alternately tighten each Screw one turn at a time until the two Tension Gauges (118, 119) are pulled apart by the upper cable (A).

   The upper cable tension is now properly adjusted.

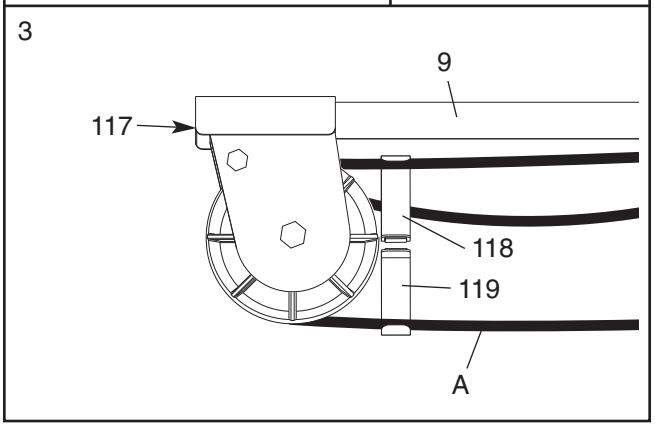

ADJUSTMENTS

This section explains how to adjust the resistance system. See the EXERCISE GUIDELINES on page 21 for important information about how to get the most benefit from your exercise program. Also, refer to the accompanying exercise guide to see the correct form for each exercise.

Make sure all parts are properly tightened each time the resistance system is used. Replace worn parts immediately. The resistance system can be cleaned with a damp cloth and a mild, non-abrasive detergent. Do not use solvents. The resistance bar can be cleaned with a vinyl and rubber protectant, available at an automotive or department store.

ATTACHING THE HIGH PULLEYS

To use a high pulley, slide the hook on the Pulley Housing (39) onto an hook on the Top Frame (37). Attach the end of the High Cable (101) without the ball to the end of the lower cable (B) with a Cable Clip (94). **Attach the other high pulley in the same manner.**

Remove the high pulleys when not in use.

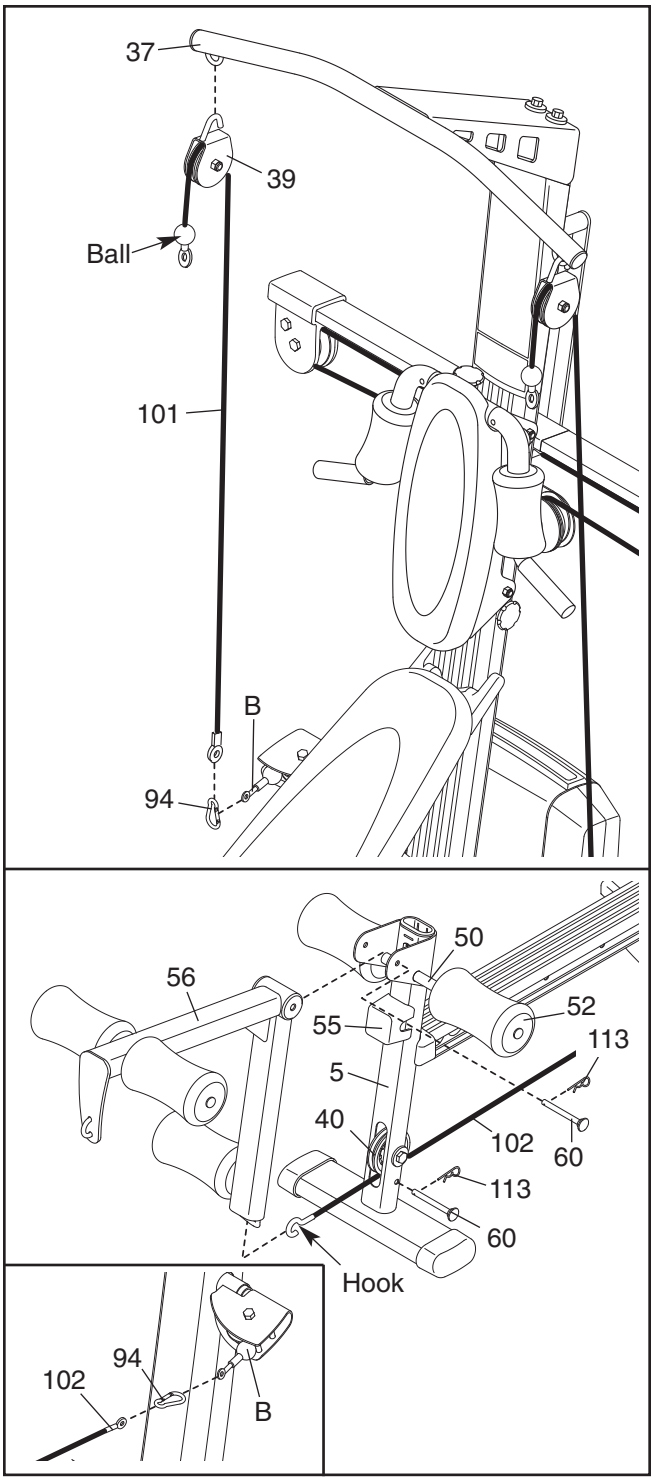

USING THE LEG LEVER

To use the Leg Lever (56), attach it to the Leg (5) with a Leg Station Pin (60). Slide a Cotter Pin (113) onto the Leg Station Pin.

Route the hook end of the Leg Lever Cable (102) under the 90mm Pulley (40) in the Leg (5), and attach it to the Leg Lever (56). **Make sure the hook is oriented as shown when attaching it to the Leg Lever.** Insert a Leg Station Pin (60) into the Leg, under the Cable. Slide a Cotter Pin (113) onto the Leg Station Pin.

See the inset drawing. Attach a long end of the Leg Lever Cable (102) to one end of the lower cable (B) with a Cable Clip (94). **Attach the other long end of the Leg Lever Cable to the other end of the low cable in the same manner.**

To perform the leg extension exercise, the indicated Pad Tube (50) should be inserted through the Leg (5) as shown.

To perform the leg curl exercise, remove a Large Foam Pad (52) from the Pad Tube (50). Remove the Pad Tube and insert it through the hole in the Leg Lever Bumper (55).

ATTACHING THE ACCESSORIES

To attach the Lat Bar (82) to the high pulleys, first attach the high pulley to the resistance system (see ATTACHING THE HIGH PULLEYS on page 13). Then, attach the Lat Bar to a High Cable (101) with a Cable Clip (94). **Attach the Lat Bar to the other High Cable in the same manner.**

The Handles (not shown) and the Ankle Strap (not shown) can be attached to the High Cables (101) or the lower cable (not shown) with Cable Clips (94). Attach the Hip Strap (not shown) to the ends of the lower cable with two Cable Clips.

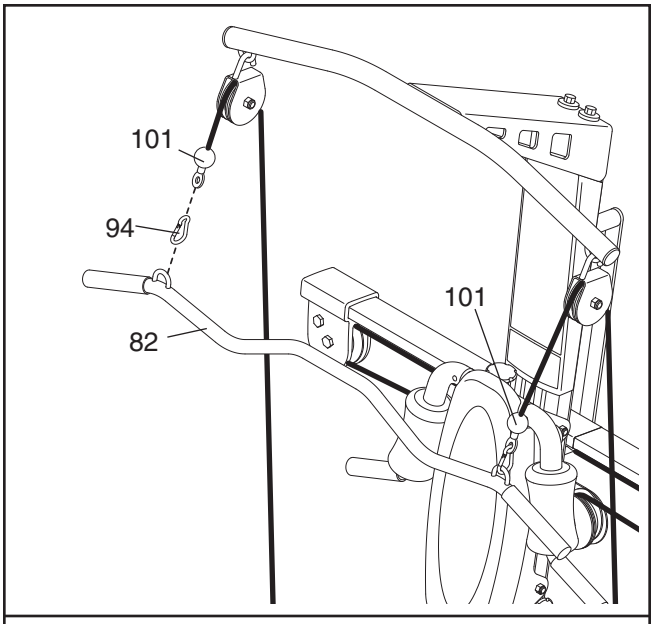

ATTACHING THE CURL PAD

To attach the Curl Pad (43), insert the Curl Post (42) into the Leg (5). Secure the Curl Post with the Curl Knob (59).

Remove the Curl Pad (43) from the resistance system when performing an exercise that does not require it.

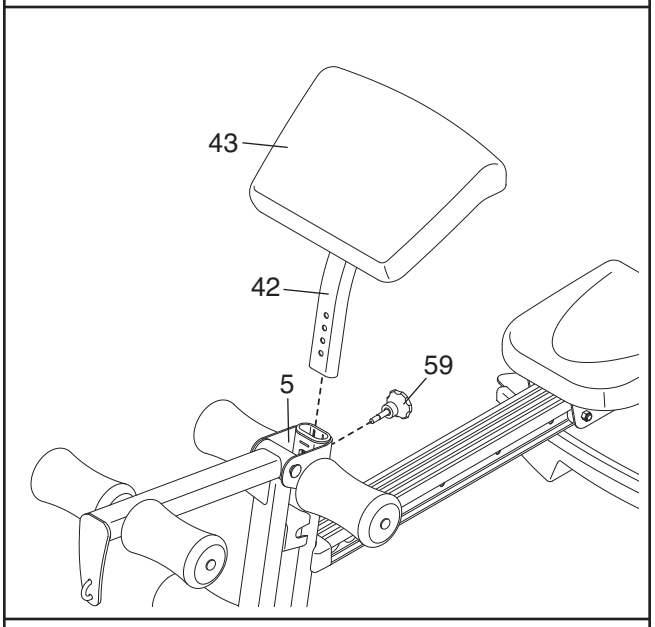

ATTACHING THE CURL BAR

To use the Curl Bar (53), first attach the leg lever to the leg (see USING THE LEG LEVER on page 13). Attach the Curl Bar to the hook on the Leg Lever (56) with a Cable Clip (94).

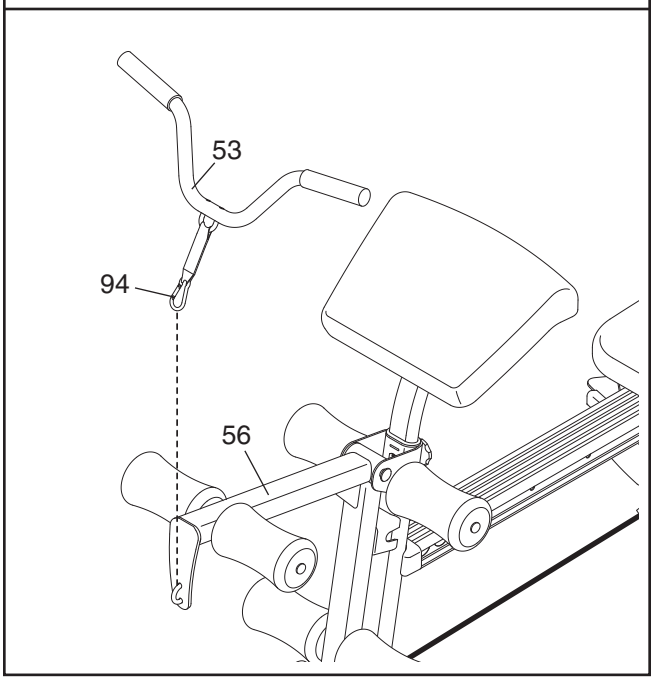

ADJUSTING THE SQUAT ARM

To adjust the Squat Arm (20), remove the Squat Knob (27) from Squat Carriage (19). Move the Arm to the up or down position, and reengage the Knob into the Squat Carriage.

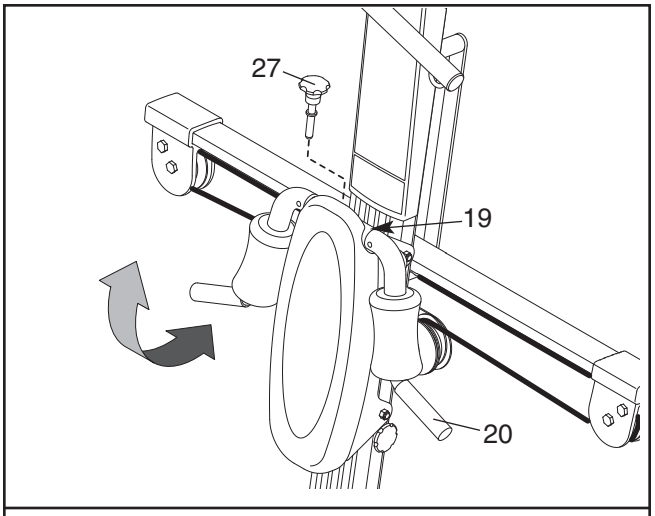

ATTACHING THE SQUAT STATION

To use the squat station, first remove the backrest (see ADJUSTING THE BACKREST below). Next, adjust the squat arm to the up position (see ADJUSTING THE SQUAT ARM above). Then, insert a Squat Pin (66) into the correct hole in the Upright (2). Finally, attach each end of the lower cable (B) to the Squat Carriage (19) with a Carriage Strap (77) and two Cable Clips (94).

Note: The Squat Pin (66) will determine the lowest point to which the Squat Carriage (19) can descend. The Squat Carriage should not be able to descend so low that the user could become trapped under the Squat Arm (20).

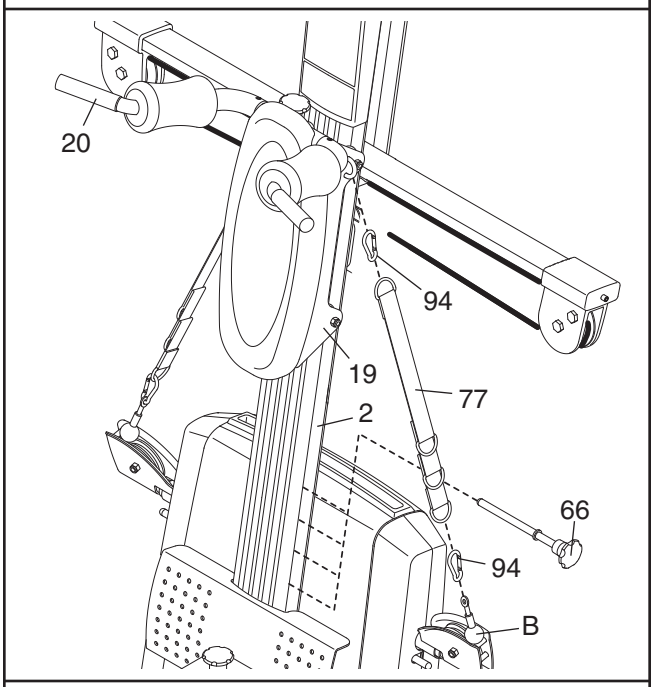

ADJUSTING THE BACKREST

The Backrest (35) can be used in a level position or an inclined position. To use the Backrest in a level position, secure the Seat Carriage (44) at the adjustment hole in the Rail (4) closest to the Leg (not shown) (see ADJUSTING THE SEAT on page 16).

To use the Backrest (35) in an inclined position, secure the Seat Carriage (44) at one of the other adjustment holes in the Rail (4). Rest the Backrest against the Upright (2).

For row exercises, remove the Backrest (35) from the Seat Carriage (44). Hold the Backrest vertically over the Seat Carriage and lift the rod out of the slot (see the inset drawing).

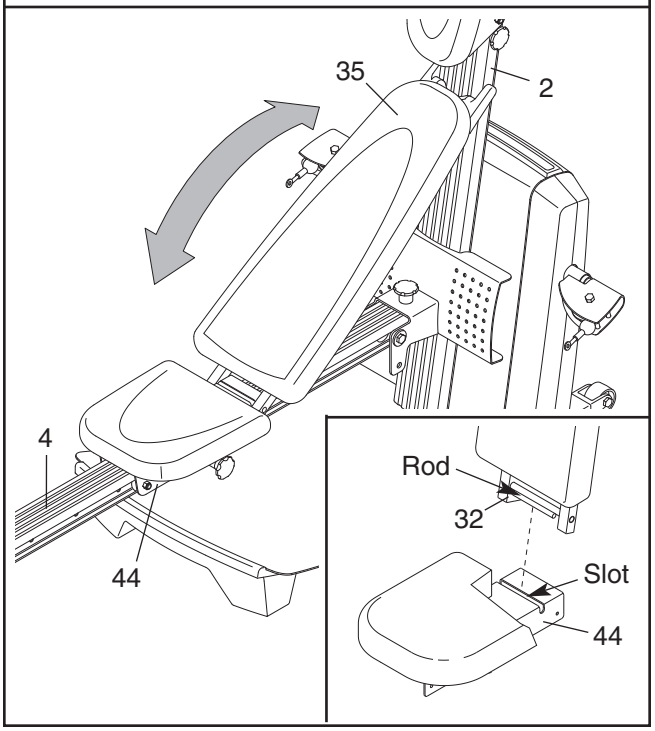

ADJUSTING THE SEAT

The Seat (45) can be secured at various positions on the Rail (4). To move the Seat, pull the Seat Knob (48) out as far as it will go and slide the Seat to the desired position. Engage the Seat Knob into an adjustment hole in the Rail.

To perform row exercises, the hip strap must be attached to the mech cable (see ATTACHING THE ACCESSORIES, on page 14), and the Seat Carriage (44) must be able to roll along the Rail (4). First, remove the Backrest (35) from the Seat Carriage (see ADJUSTING THE BACKREST on page 15). Then, pull the Seat Knob (48) out as far as it will go, and turn the Knob so that the pin rests at the end of the "L"-shaped slot (see the inset drawing).

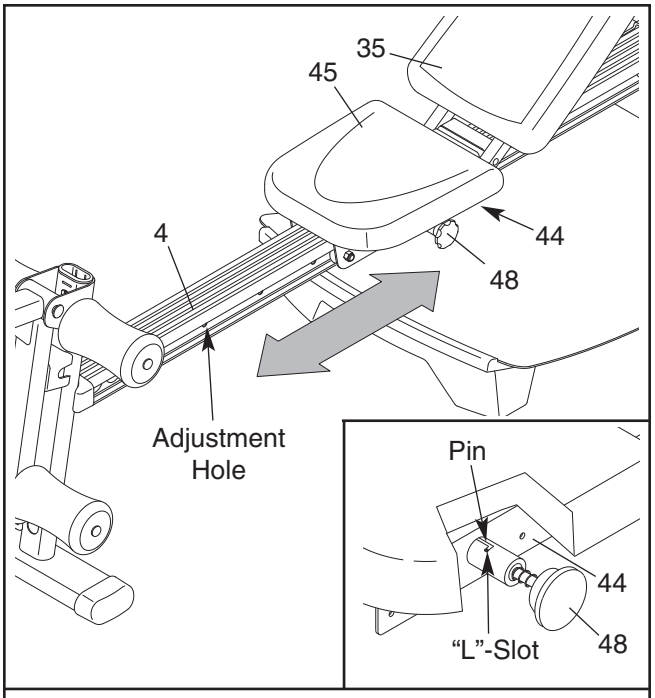

STORING THE RESISTANCE SYSTEM

To store the resistance system, first remove the Curl Pad (not shown) and the Leg Lever (not shown) from the resistance system. Secure the Seat Carriage (44) at the position closest to the Leg (5) (see ADJUSTING THE SEAT above). Next, remove the Storage Knob (29) from the Row Plate (28). Lift the Leg toward the Top Frame (37), and tighten the Storage Knob into the side of the Row Plate and into the Rail (4).

To move the resistance system, stand behind the Upright (2) and place the toe of your shoe on the end of the Base Plate (1) and hold the resistance system in the indicated area. Tilt the resistance system back onto the Wheels (65) and roll it to the new location.

⚠ WARNING: Make sure that Storage Knob (29) is in place and fully tightened each time the resistance system is used.

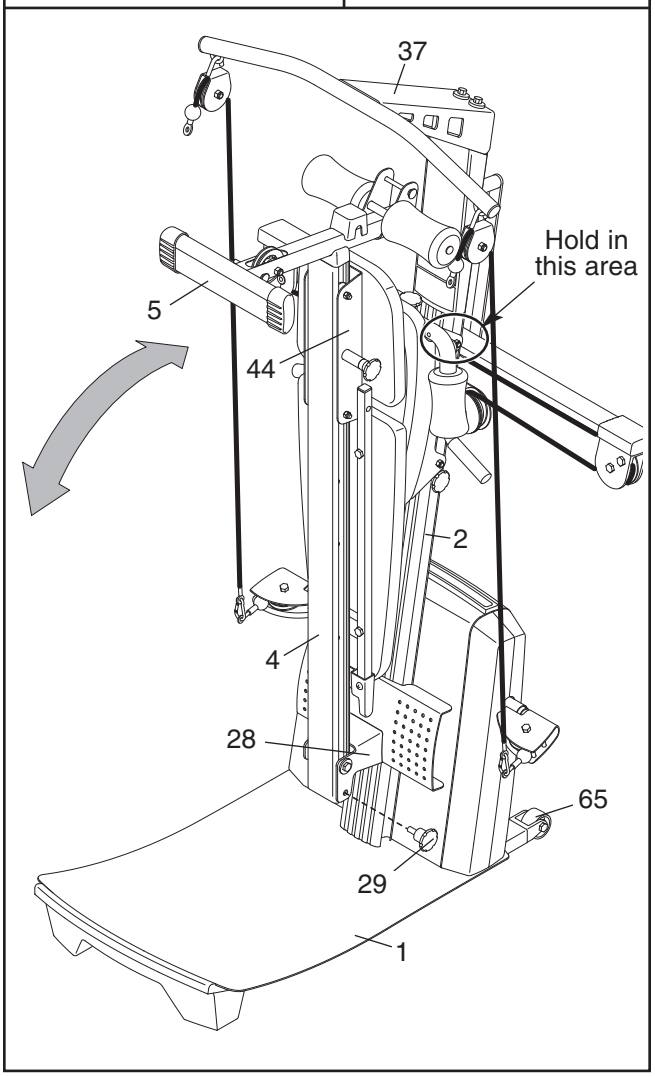

CONSOLE OPERATION

FEATURES OF THE CONSOLE

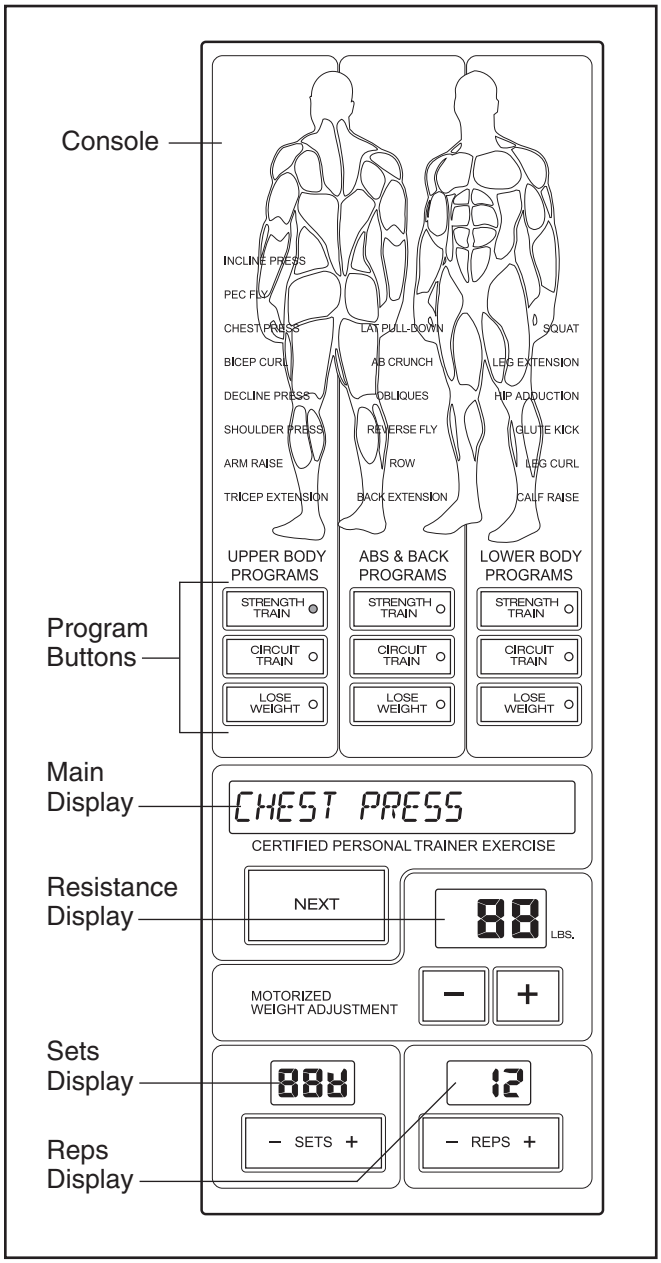

The heart of the resistance system is the digital resistance training console. The console offers both a manual mode and nine workout programs. When the manual mode is selected, the resistance setting can be changed with the touch of a button. When a program is selected, the console will guide you through an effective upper body, ab and back, or lower body workout.

To use the manual mode of the console, follow the steps at the right. To use a program, see page 18.

PLUGGING IN THE RESISTANCE SYSTEM

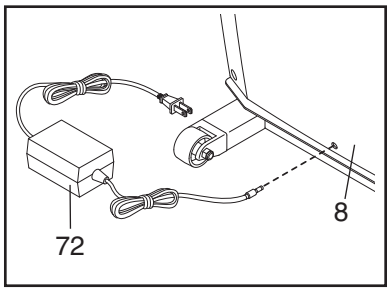

Plug the indicated end of the Transformer (72) into the Back Mech Cover (8). Plug the other end of the Transformer into a 120-volt outlet. All indicators and displays on the console will flash once; the console will then be ready for use. The motor may be heard while the resistance system calibrates itself. **Important: Always plug in the transformer when using the resistance system.**

MANUAL OPERATION

1. **Plug in the transformer.**

   Plug the transformer into a 120-volt outlet (see PLUGGING IN THE RESISTANCE SYSTEM above). **Important: Always plug in the transformer when using the resistance system.**

   Note: When the power is on, the words SELECT PROGRAM will appear in the main display. To use a program, see PROGRAM OPERATION on page 18. If you want to return to the manual mode while the console is running a program, press and hold the NEXT button.

   If no buttons are pressed and no cables are pulled for ten minutes, the console will go to sleep. Press any button to resume exercising.

2. **Select a resistance setting.**

   The current resistance setting will appear in the resistance display. To select a different resistance setting, first **make sure that no cables are being pulled.** Next, press the resistance + and – buttons. Each time a button is pressed, the resistance setting will increase or decrease by 1 pound. To change the resistance setting quickly, hold down one of the buttons.

   Note: While the resistance setting is changing, the motor will be heard. **To prevent damage to the motor, do not pull any of the cables while the resistance setting is changing.** If a cable is pulled, the words RELEASE HANDLES AND READJUST RESISTANCE AS DESIRED may appear in the main display.

Note: The resistance system uses progressive resistance. As the resistance bar begins to bend, the amount of resistance will increase gradually. As the bar bends further, the resistance will increase rapidly.

3. **Enter the numbers of sets and repetitions that you plan to complete for an exercise.**

   To enter the number of sets that you plan to do, press the SETS + and – buttons. To enter the number of repetitions that you plan to do, press the REPS + and – buttons.

   Note: If you do not enter the numbers of sets and repetitions that you plan to do, the console will count the total number of repetitions that you complete during your workout.

4. **Perform the exercise.**

   If you have entered numbers of sets and repetitions, the console will count down the repetitions and sets you have completed. When you complete the exercise, repeat steps 2 and 3 above for the next exercises.

5. **Unplug the transformer.**

   When you complete your workout, unplug the transformer from the 120-volt outlet.

PROGRAM OPERATION

1. **Plug in the transformer.**

   Plug the transformer into a 120-volt outlet (see PLUGGING IN THE RESISTANCE SYSTEM on page 17). **Important: Always plug in the transformer when using the resistance system.**

   Note: If no buttons are pressed and no cables are pulled for ten minutes, the console will go to sleep. Press any button to resume exercising.

2. **Select a program.**

   When the power is on, the words SELECT PROGRAM will appear in the main display. To select a program, press one of the nine program buttons. The indicator on the button you press will light.

   Note: The console offers three upper body programs, three ab and back programs, and three lower body programs. If you wish to exercise your upper body and if your goal is to lose weight, for example, press the LOSE WEIGHT button below the words UPPER BODY PROGRAMS.

3. **Row for five minutes to warm up.**

   When a program is selected, the words CARDIO ROW will appear in the main display. To warm up, perform the cardio row exercise while the main display counts down from 5 minutes.

   Note: To see the correct form for the cardio row exercise, see the included exercise guide. If the resistance setting is too high or too low, select a different resistance setting by pressing the resistance + and – buttons.

4. **Adjust the resistance setting and the numbers of sets and repetitions for the exercise if desired.**

   The name of an exercise in the program will appear in the main display. The recommended resistance setting and the recommended numbers of sets and repetitions for the exercise will appear in the three displays below the main display.

   The recommended resistance setting and the recommended numbers of sets and repetitions may be too high or too low for you, depending on such factors as your body size and your physical condition. If desired, adjust the resistance setting and the numbers of sets and repetitions by pressing the + and – buttons below each display.

5. **Perform the exercise.**

   As you perform the exercise, the console will count down the numbers of sets and repetitions you have completed.

   When you complete the exercise, the word RESTING will appear in the main display. It is recommended that you rest while the main display counts down.

6. **Perform the remaining exercises in the program.**

   After you have completed an exercise in the program, press the NEXT button and the name of the next exercise will appear in the main display. Repeat steps 4 and 5 above for the exercise.

   Note: The program may include the same exercise twice, with different resistance settings and different numbers of sets and repetitions. If you wish to skip any part of the program, press the NEXT button to advance to the next part of the program.

   When you complete the program, the words WORKOUT COMPLETE will appear in the main display.

7. **Unplug the transformer.**

   When you complete your workout, unplug the transformer from the 120-volt outlet.

CABLE DIAGRAM

The cable diagram shows the proper routing of the upper cable (A). Use the diagram to make sure that the cable has been assembled correctly. If the cable has not been correctly routed, the resistance system will not function properly and damage may occur. The numbers show the correct route for the cable. **Make sure that the ends of the cable do not wrap around each other between positions 1 and 2, and 5 and 6.**

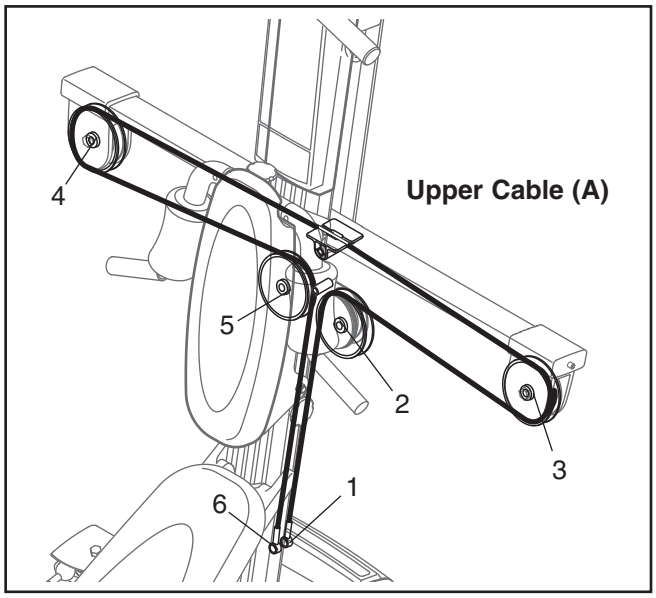

TROUBLESHOOTING

CLEANING THE BAR GUIDES

Over time, dust may build up on the Crossbar Guides (15), causing a squeaking noise as the resistance system is used. If this occurs, wipe off the Crossbar Guides with a damp cloth and a mild, non-abrasive detergent. Do not use solvents.

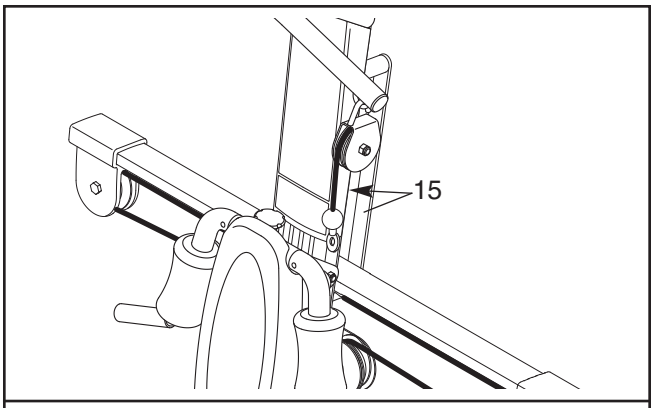

ADJUSTING THE RESISTANCE

When the resistance setting changes, the motor will be heard. **To prevent damage to the motor, do not pull any of the cables while the resistance setting is changing.** If a cable is pulled, the words RELEASE HANDLES AND READJUST RESISTANCE AS DESIRED may appear in the main display on the console.

If this message is displayed repeatedly but no cable is being pulled, there may be too much tension on the upper cable (A). Adjust the tension as described below.

To decrease the tension on the upper cable (A), turn the two 3/8” x 38mm Tension Screws (117) twice, counterclockwise. Select the desired resistance setting. Repeat this step if necessary.

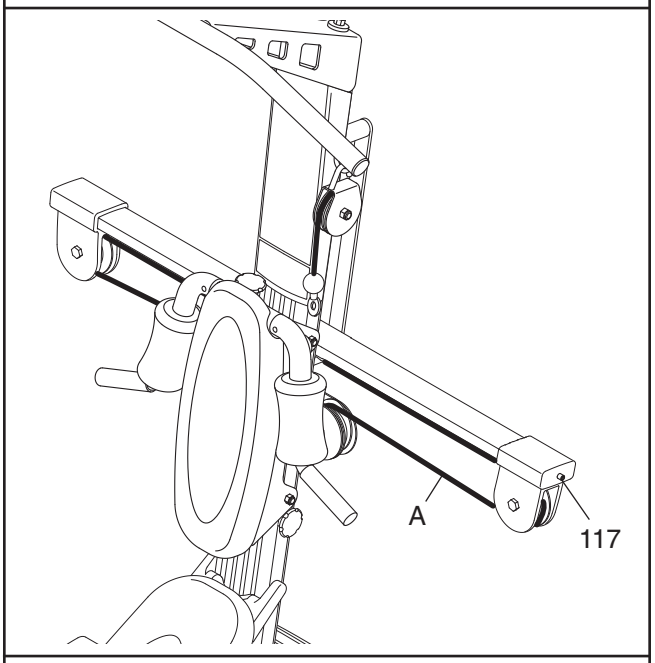

RECALIBRATING THE CONSOLE

To recalibrate the Console (67), first plug in the resistance system (see PLUGGING IN THE RESISTANCE SYSTEM on page 17). Then, press and hold the NEXT button and the MOTORIZED WEIGHT ADJUSTMENT + button for five seconds. When the buttons are released, a number will appear in the REPS display. Press the NEXT button again, then press the MOTORIZED WEIGHT ADJUSTMENT + button; this will start the recalibration process. This may take a few minutes as the motor moves between the lowest and highest resistance settings. When the motor finishes, unplug the transformer from the 120-volt outlet.

The Console (67) will be recalibrated. Use the resistance system as described in the CONSOLE OPERATION section, starting on page 17.

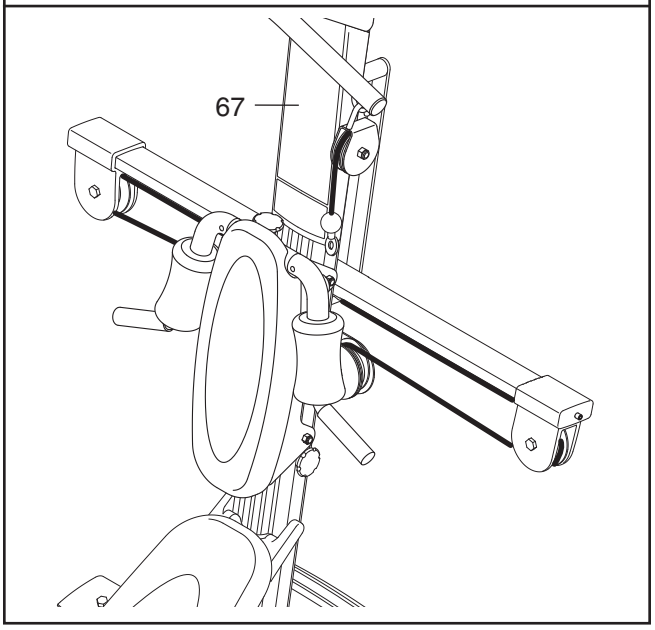

EXERCISE GUIDELINES

THE FOUR BASIC TYPES OF WORKOUTS

Muscle Building
To increase the size and strength of your muscles, push them close to their maximum capacity. Your muscles will continually adapt and grow as you progressively increase the intensity of your exercise. You can adjust the intensity level of an individual exercise in two ways:
- by changing the amount of resistance used
- by changing the number of repetitions or sets performed. (A “repetition” is one complete cycle of an exercise, such as one sit-up. A “set” is a series of repetitions.)

The proper amount of resistance for each exercise depends upon the individual user. You must gauge your limits and select the amount of resistance that is right for you. Begin with 3 sets of 8 repetitions for each exercise you perform. Rest for 3 minutes after each set. When you can complete 3 sets of 12 repetitions without difficulty, increase the amount of resistance.

Toning
You can tone your muscles by pushing them to a moderate percentage of their capacity. Select a moderate amount of resistance and increase the number of repetitions in each set. Complete as many sets of 15 to 20 repetitions as possible without discomfort. Rest for 1 minute after each set. Work your muscles by completing more sets rather than by using high amounts of resistance.

Weight Loss
To lose weight, use a low amount of resistance and increase the number of repetitions in each set. Exercise for 20 to 30 minutes, resting for a maximum of 30 seconds between sets.

Cross Training
Cross training is an efficient way to get a complete and well-balanced fitness program. An example of a balanced program is:
- Plan strength training workouts on Monday, Wednesday, and Friday.
- Plan 20 to 30 minutes of aerobic exercise, such as running on a treadmill or riding on an elliptical or exercise bike, on Tuesday and Thursday.
- Rest from both strength training and aerobic exercise for at least one full day each week to give your body time to regenerate.

The combination of strength training and aerobic exercise will reshape and strengthen your body, plus develop your heart and lungs.

PERSONALIZING YOUR EXERCISE PROGRAM

Determining the exact length of time for each workout, as well as the number of repetitions or sets completed, is an individual matter. It is important to avoid overdoing it during the first few months of your exercise program. You should progress at your own pace and be sensitive to your body’s signals. If you experience pain or dizziness at any time while exercising, stop immediately and begin cooling down. Find out what is wrong before continuing. Remember that adequate rest and a proper diet are important factors in any exercise program.

WARMING UP

Begin each workout with 5 to 10 minutes of stretching and light exercise to warm up. Warming up prepares your body for more strenuous exercise by increasing circulation, raising your body temperature and delivering more oxygen to your muscles.

WORKING OUT

Each workout should include 6 to 10 different exercises. Select exercises for every major muscle group, emphasizing areas that you want to develop most. To give balance and variety to your workouts, vary the exercises from session to session.

Schedule your workouts for the time of day when your energy level is the highest. Each workout should be followed by at least one day of rest. Once you find the schedule that is right for you, stick with it.

EXERCISE FORM

Maintaining proper form is an essential part of an effective exercise program. This requires moving through the full range of motion for each exercise, and moving only the appropriate parts of the body. Exercising in an uncontrolled manner will leave you feeling exhausted. On the exercise guide accompanying this manual you will find photographs showing the correct form for several exercises, and a list of the muscles affected. Refer to the muscle chart on the next page to find the names of the muscles.

The repetitions in each set should be performed smoothly and without pausing. The exertion stage of each repetition should last about half as long as the return stage. Proper breathing is important. Exhale during the exertion stage of each repetition and inhale during the return stroke. Never hold your breath.

Rest for a short period of time after each set. The ideal resting periods are:

- Rest for three minutes after each set for a muscle building workout.
- Rest for one minute after each set for a toning workout.
- Rest for 30 seconds after each set for a weight loss workout.

Plan to spend the first couple of weeks familiarizing yourself with the equipment and learning the proper form for each exercise.

COOLING DOWN

End each workout with 5 to 10 minutes of stretching. Include stretches for both your arms and legs. Move slowly as you stretch and do not bounce. Ease into each stretch gradually and go only as far as you can without strain. Stretching at the end of each workout is an effective way to increase flexibility.

STAYING MOTIVATED

For motivation, keep a record of each workout. The chart on page 23 of this manual can be photocopied and used to schedule and record your workouts. List the date, the exercises performed, the resistance used, and the numbers of sets and repetitions completed. Record your weight and key body measurements at the end of every month. Remember, the key to achieving the greatest results is to make exercise a regular and enjoyable part of your everyday life.

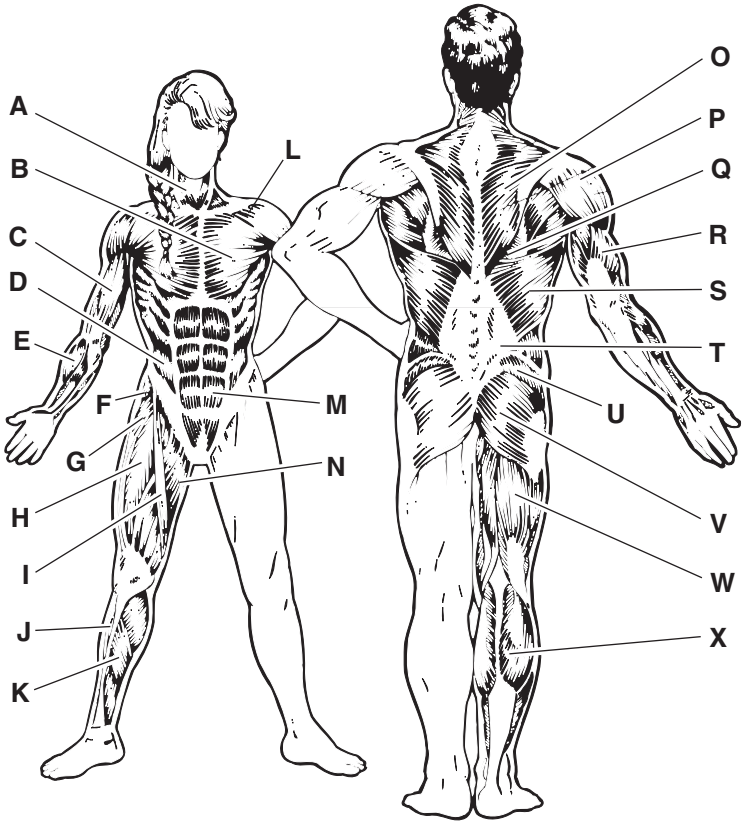

MUSCLE CHART

A. Sternomastoid (neck)
B. Pectoralis Major (chest)
C. Biceps (front of arm)
D. Obliques (waist)
E. Brachioradials (forearm)
F. Hip Flexors (upper thigh)
G. Abductor (outer thigh)
H. Quadriceps (front of thigh)
I. Sartorius (front of thigh)
J. Tibialis Anterior (front of calf)
K. Soleus (front of calf)
L. Anterior Deltoid (shoulder)
M. Rectus Abdominus (stomach)
N. Adductor (inner thigh)
O. Trapezius (upper back)
P. Rhomboideus (upper back)
Q. Posterior Deltoid (shoulder)
R. Triceps (back of arm)
S. Latissimus Dorsi (mid back)
T. Spinae Erectors (lower back)
U. Gluteus Medius (hip)
V. Gluteus Maximus (buttocks)
W. Hamstring (back of leg)
X. Gastrocnemius (back of calf)

MONDAY
Date:
____/____/____

EXERCISE	WEIGHT	SETS	REPS

TUESDAY
Date:
____/____/____

AEROBIC EXERCISE

WEDNESDAY
Date:
____/____/____

EXERCISE	WEIGHT	SETS	REPS

THURSDAY
Date:
____/____/____

AEROBIC EXERCISE

FRIDAY
Date:
____/____/____

EXERCISE	WEIGHT	SETS	REPS

Make photocopies of this page for scheduling and recording your workouts.

REMOVE THIS PART IDENTIFICATION CHART AND PART LIST/ EXPLODED DRAWING. SAVE THIS PART IDENTIFICATION CHART AND PART LIST/EXPLODED DRAWING FOR FUTURE REFERENCE.

PART IDENTIFICATION CHART—Model No. WESY78732

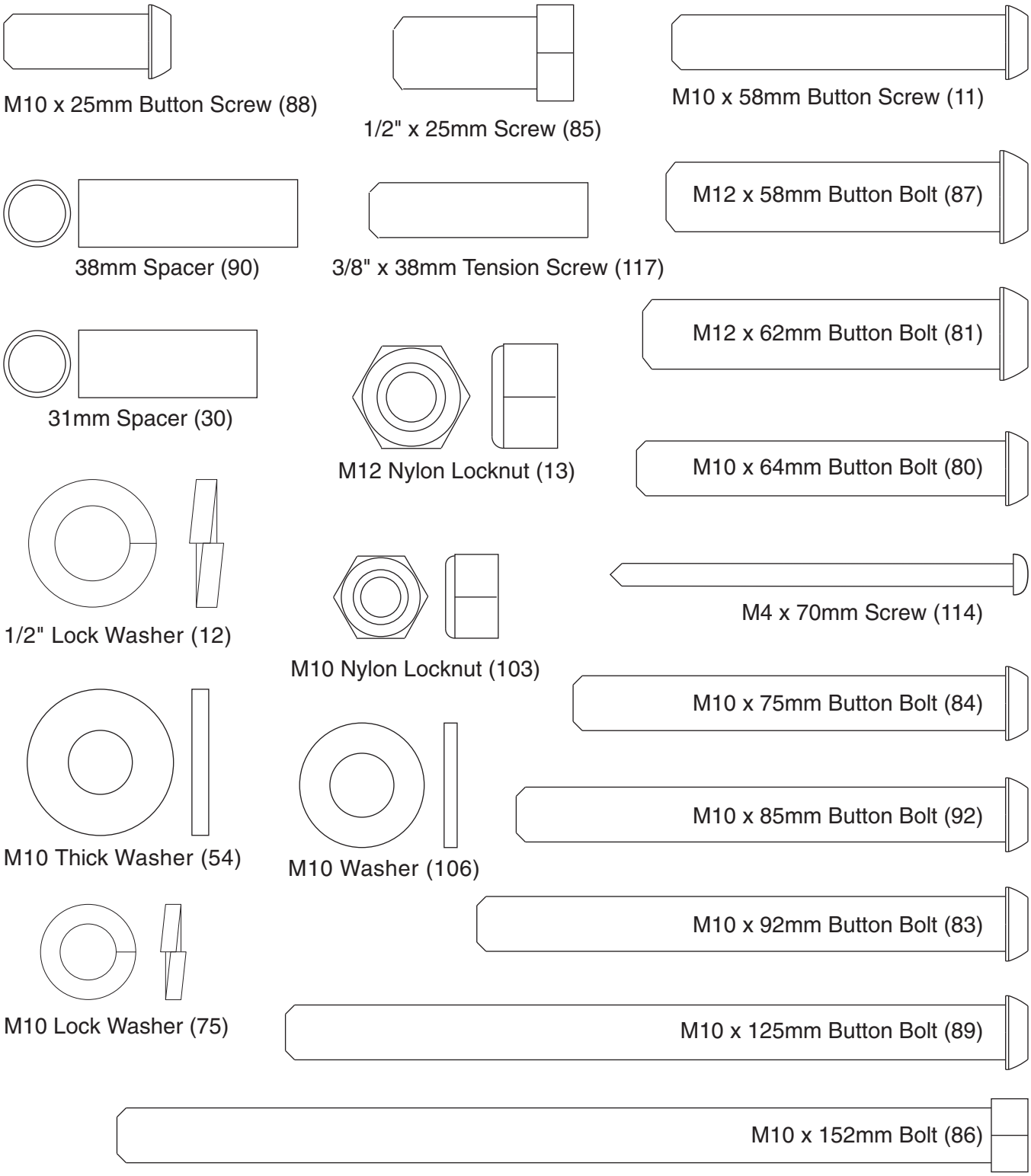

PART LIST—Model No. WESY78732

R0204A

Key No.	Qty.	Description
1	1	Base Plate
2	1	Upright
3	1	Upright Cover
4	1	Rail
5	1	Leg
6	1	Mech Frame
7	1	Front Mech Cover
8	1	Back Mech Cover
9	1	Resistance Bar
10	2	Pulley Bracket
11	1	M10 x 58mm Button Screw
12	1	1/2” Lock Washer
13	4	M12 Nylon Locknut
14	4	Large Pulley
15	2	Crossbar Guide
16	1	Crossbar Block
17	1	Large Guide Spacer
18	2	Small Guide Spacer
19	1	Squat Carriage
20	2	Squat Arm
21	6	Short Handgrip
22	1	Squat Pivot Tube
23	2	Squat Arm Roll Pin
24	2	Small Foam Pad
25	1	Squat Backrest
26	8	Carriage Wheel
27	1	Squat Knob
28	1	Row Plate
29	1	Storage Knob
30	2	31mm Spacer
31	1	Rail Insert
32	1	Backrest Frame
33	1	Backrest Cap
34	2	25mm Square Inner Cap
35	1	Backrest
36	3	Plastic Foot
37	1	Top Frame
38	2	38mm Round Inner Cap
39	2	Pulley Housing
40	5	90mm Pulley
41	10	M6 x 16mm Screw
42	1	Curl Post
43	1	Curl Pad
44	1	Seat Carriage
45	1	Seat
46	1	Pop Pin
47	1	Knob Spring
48	1	Seat Knob
49	1	Rail Cap
50	3	Pad Tube
51	6	19mm Round Inner Cap
52	6	Large Foam Pad
53	1	Curl Bar
54	3	M10 Thick Washer
55	1	Leg Lever Bumper
56	1	Leg Lever
57	2	Leg Lever Bushing
58	1	Leg Station Bushing
59	1	Curl Knob
60	2	Leg Station Pin
61	2	22mm Spacer
62	2	Leg Outer Cap
63	1	Base Plate Foot
64	2	Wheel Insert
65	2	Wheel
66	1	Squat Pin
67	1	Console
68	1	Pulley Plate
69	1	Cable Guide
70	2	Tether
71	1	Upper Wire Harness
72	1	Transformer
73	2	Pulley Pivot Bracket
74	2	Pivot Bracket Bushing
75	3	M10 Lock Washer
76	1	M5 x 35mm Screw
77	2	Carriage Strap
78	4	M10 x 40mm Button Bolt
79	4	16mm Spacer
80	6	M10 x 64mm Button Bolt
81	2	M12 x 62mm Button Bolt
82	1	Lat Bar
83	1	M10 x 92mm Button Bolt
84	5	M10 x 75mm Button Bolt
85	1	1/2” x 25mm Screw
86	2	M10 x 152mm Bolt
87	2	M12 x 58mm Button Bolt
88	3	M10 x 25mm Button Screw
89	1	M10 x 125mm Button Bolt
90	1	38mm Spacer
91	1	Reed Sensor
92	1	M10 x 85mm Button Bolt
93	4	M10 x 44mm Button Bolt
94	4	Cable Clip
95	2	Long Handle
96	2	Short Handle
97	1	Hip Strap
98	1	Ankle Strap
99	2	M10 x 78mm Button Bolt
100	2	M4 x 38mm Screw
101	2	High Cable
102	1	Leg Lever Cable
103	31	M10 Nylon Locknut
104	4	M10 x 34mm Button Bolt
105	4	M6 x 38mm Screw
106	14	M10 Washer
107	4	M6 Washer
108	2	M5 x 56mm Screw
109	2	M4 x 7mm Machine Screw
110	1	45mm Square Inner Cap
111	4	M4 x 20mm Screw
112	2	M4 x 5mm Screw (Round Head)
113	2	Cotter Pin
114	4	M4 x 70mm Screw
115	4	11mm Spacer
116	9	M4 x 16mm Screw
117	2	3/8" x 38mm Tension Screw
118	1	Tension Gauge
119	1	Tension Gauge w/magnet
#	1	User’s Manual
#	1	Exercise Guide
#	1	Large Allen Wrench
#	1	Small Allen Wrench

Note: “#” indicates a non-illustrated part. Specifications are subject to change without notice. See the back cover of the user’s manual for information about ordering replacement parts.

EXPLODED DRAWING—Model No. WESY78732

R0204A

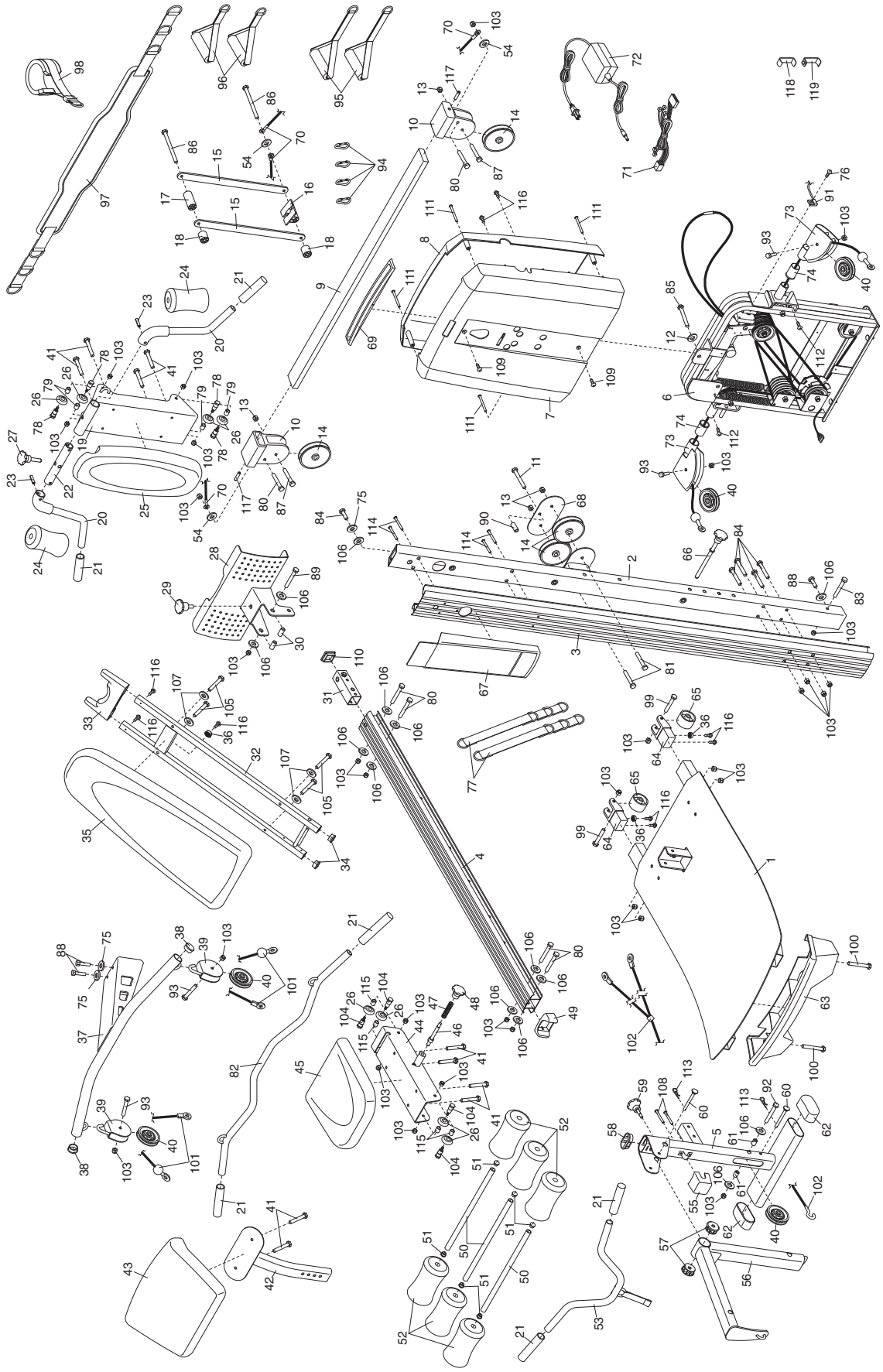

ORDERING REPLACEMENT PARTS

To order replacement parts, simply call our Customer Service Department toll-free at 1-877-992-5999, Monday through Friday, 6 a.m. until 6 p.m. Mountain Time (excluding holidays). To help us assist you, please be prepared to give the following information:

- The MODEL NUMBER of the product (WESY78732)
- The NAME of the product (WEIDER™ PLATINUM resistance system)
- The SERIAL NUMBER of the product (see the front cover of this manual)
- The KEY NUMBER and DESCRIPTION of the part(s) (see the PART LIST and EXPLODED DRAWING in the center of this manual)

LIMITED WARRANTY

ICON Health & Fitness, Inc. (ICON), warrants this product to be free from defects in workmanship and material, under normal use and service conditions, for a period of ten (10) years from the date of purchase. ICON warrants the resistance bar for the lifetime of the product. This warranty extends only to the original purchaser. ICON's obligation under this warranty is limited to replacing the warranted parts. This warranty does not extend to any product or damage to a product caused by or attributable to freight damage, abuse, misuse, improper or abnormal usage or repairs not provided by an ICON authorized service center; products used for commercial or rental purposes; or products used as store display models. No other warranty beyond that specifically set forth above is authorized by ICON.

ICON is not responsible or liable for indirect, special or consequential damages arising out of or in connection with the use or performance of the product or damages with respect to any economic loss, loss of property, loss of revenues or profits, loss of enjoyment or use, costs of removal or installation or other consequential damages of whatsoever nature. Some states do not allow the exclusion or limitation of incidental or consequential damages. Accordingly, the above limitation may not apply to you.

The warranty extended hereunder is in lieu of any and all other warranties and any implied warranties of merchantability or fitness for a particular purpose is limited in its scope and duration to the terms set forth herein. Some states do not allow limitations on how long an implied warranty lasts. Accordingly, the above limitation may not apply to you.

This warranty gives you specific legal rights. You may also have other rights which vary from state to state.

ICON HEALTH & FITNESS, INC., 1500 S. 1000 W., LOGAN, UT 84321-9813

Part No. 208608 R0204A

Printed in China © 2004 ICON Health & Fitness, Inc.