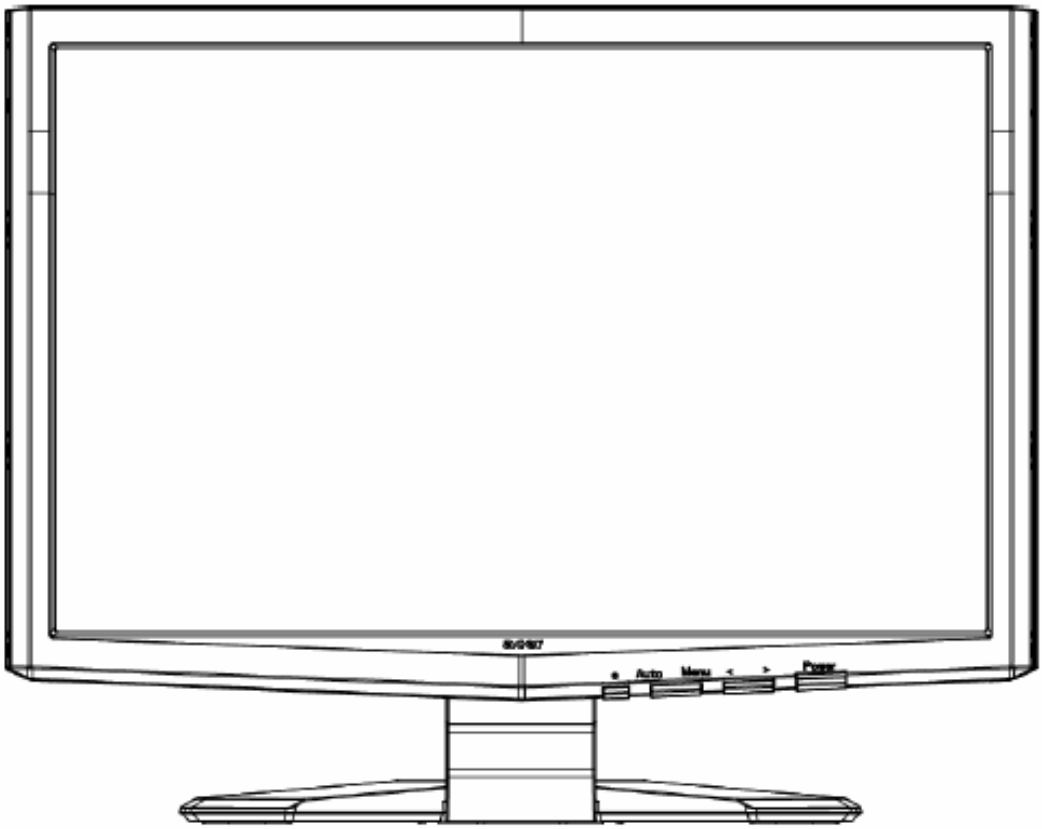

Acer X233H

Service Guide

Service Guide Version and Revision

Version	Release Date	Revision History	Customer model	TPV model
A00	Dec.-02-2008	Initial Release	X233H	TDRSNDD8Y2ABPN

Copyright

Copyright © 2003 by Acer Incorporated. All rights reserved. No part of this publication may be reproduced, Transmitted, transcribed, stored in a retrieval system, or translated into any language or computer language, in any form or by any means, electronic, mechanical, magnetic, optical, chemical, manual or otherwise, without the prior written permission of Acer Incorporated.

Disclaimer

The information in this guide is subject to change without notice. Acer Incorporated makes no representations or warranties, either expressed or implied, with respect to the contents hereof and specifically disclaims any warranties of merchantability or fitness for any particular purpose. Any Acer Incorporated software described in this manual is sold or licensed "as is". Should the programs prove defective following their purchase, the buyer (and not Acer Incorporated, its distributor, or its dealer) assumes the entire cost of all necessary servicing, repair, and any incidental or consequential damages resulting from any defect in the software.

Intel is a registered trademark of Intel Corporation.
Pentium and Pentium II/III are trademarks of Intel Corporation.
Other brand and product names are trademarks and/or registered trademarks of their respective holders.

Trademarks

Acer is a registered trademark of Acer Incorporated.
All other trademarks are property of their respective owners.

Conventions

The following conventions are used in this manual:

Screen messages	Denotes actual messages that appear on screen.
Note	Gives bits and pieces of additional information related to the current topic.
Warning	Alerts you to any damage that might result from doing or not doing specific actions.
Caution	Gives precautionary measures to avoid possible hardware or software problems.
Important	Remind you to do specific actions relevant to the accomplishment of procedures.

Preface

Before using this information and the product it supports, please read the following general information.

1. This Service Guide provides you with all technical information relating to the BASIC CONFIGURATION decided for Acer's "global" product offering. To better fit local market requirements and enhance product competitiveness, your regional office may have decided to extend the functionality of a machine (e.g. add-on card, modem, or extra memory capability). These LOCALIZED FEATURES will NOT be covered in this generic service guide. In such cases, please contact your regional offices or the responsible personnel/channel to provide you with further technical details.

2. Please note WHEN ORDERING FRU PARTS, that you should check the most up-to-date information available on your regional web or channel. If, for whatever reason, a part number change is made, it will not be noted in the printed Service Guide. For ACER-AUTHORIZED SERVICE PROVIDERS, your Acer office may have a DIFFERENT part number code to those given in the FRU list of this printed Service Guide. You MUST use the list provided by your regional Acer office to order FRU parts for repair and service of customer machines.

Warning: (For FCC Certified Models)

Note: This equipment has been tested and found to comply with the limits for a Class B digital device, pursuant to Part 15 of the FCC Rules. These limits are designed to provide reasonable protection against harmful interference in a residential installation. This equipment generates, uses and can radiate radio frequency energy, and if not installed and used in accordance with the instructions, may cause harmful interference to radio communications. However, there is no guarantee that interference will not occur in a particular installation. If this equipment does cause harmful interference to radio or television reception, which can be determined by turning the equipment off and on, the user is encouraged to try to correct the interference by one or more of the following measures:

1. Reorient or relocate the receiving antenna.
2. Increase the separation between the equipment and receiver.
3. Connect the equipment into an outlet on a circuit different from that to which the receiver is connected.
4. Consult the dealer or an experienced radio/TV technician for help.

Notice:

1. The changes or modifications not expressly approved by the party responsible for compliance could void the user's authority to operate the equipment.
2. Shielded interface cables and AC power cord, if any, must be used in order to comply with the emission limits.
3. The manufacturer is not responsible for any radio or TV interference caused by unauthorized modification to this equipment. It is the responsibility of the user to correct such interference.

   As ENERGY STAR® Partner our company has determined that this product meets the ENERGY STAR® guidelines for energy efficiency.

Warning:

To prevent fire or shock hazard, do not expose the monitor to rain or moisture. Dangerous high voltages are present inside the monitor. Do not open the cabinet. Refer servicing to qualified personnel only.

Precautions

- Do not use the monitor near water, e.g. near a bathtub, washbowl, kitchen sink, laundry tub, swimming pool or in a wet basement.
- Do not place the monitor on an unstable trolley, stand, or table. If the monitor falls, it can injure a person and cause serious damage to the appliance. Use only a trolley or stand recommended by the manufacturer or sold with the monitor. If you mount the monitor on a wall or shelf, uses a mounting kit approved by the manufacturer and follow the kit instructions.
- Slots and openings in the back and bottom of the cabinet are provided for ventilation. To ensure reliable operation of the monitor and to protect it from overheating, be sure these openings are not blocked or covered. Do not place the monitor on a bed, sofa, rug, or similar surface. Do not place the monitor near or over a radiator or heat register. Do not place the monitor in a bookcase or cabinet unless proper ventilation is provided.
- The monitor should be operated only from the type of power source indicated on the label. If you are not sure of the type of power supplied to your home, consult your dealer or local power company.
- The monitor is equipped with a three-pronged grounded plug, a plug with a third (grounding) pin. This plug will fit only into a grounded power outlet as a safety feature. If your outlet does not accommodate the three-wire plug, have an electrician install the correct outlet, or use an adapter to ground the appliance safely. Do not defeat the safety purpose of the grounded plug.
- Unplug the unit during a lightning storm or when it will not be used for long periods of time. This will protect the monitor from damage due to power surges.
- Do not overload power strips and extension cords. Overloading can result in fire or electric shock.
- Never push any object into the slot on the monitor cabinet. It could short circuit parts causing a fire or electric shock. Never spill liquids on the monitor.
- Do not attempt to service the monitor yourself; opening or removing covers can expose you to dangerous voltages and other hazards. Please refer all servicing to qualified service personnel
- To ensure satisfactory operation, use the monitor only with UL listed computers which have appropriate configured receptacles marked between 100 - 240V AC, Min. 5A.
- The wall socket shall be installed near the equipment and shall be easily accessible.

Special Notes On LCD Monitors

The following symptoms are normal with LCD monitor and do not indicate a problem.

Notes

- Due to the nature of the fluorescent light, the screen may flicker during initial use. Turn off the Power Switch and then turn it on again to make sure the flicker disappears.
- You may find slightly uneven brightness on the screen depending on the desktop pattern you use.
- The LCD screen has effective pixels of 99.99% or more. It may include blemishes of 0.01% or less such as a missing pixel or a pixel lit all of the time.
- Due to the nature of the LCD screen, an afterimage of the previous screen may remain after switching the image, when the same image is displayed for hours. In this case, the screen is recovered slowly by changing the image or turning off the Power Switch for hours.

Table Of Contents

Chapter 1	**Monitor Features**	.....	**7**
	Introduction	.....	7
	Electrical Requirements	.....	8
	LCD Monitor General Specification	.....	9
	LCD Panel Specification	.....	10
	Factory Preset Timing	.....	13
	Monitor Block Diagram	.....	14
	Main Board Diagram	.....	15
	Software Flow chart	.....	16
	Main Board Layout	.....	18
	Installation	.....	19
Chapter 2	**Operating Instructions**	.....	**21**
	External Controls	.....	21
	Front Panel Controls	.....	21
	eColor Management (OSD)	.....	22
	How to Adjust a Setting	.....	23
	How To Optimize The DOS-Mode	.....	26
	Enter into the factory mode	.....	26
Chapter 3	**Machine Disassembly**	.....	**27**
Chapter 4	**Troubleshooting**	.....	**30**
Chapter 5	**Connector Information**	.....	**36**
Chapter 6	**FRU (Field Replacement Unit) List**	.....	**37**
	Exploded Diagram	.....	37
Chapter 7	**Schematic Diagram**	.....	**42**

Monitor Features Chapter 1

Introduction

Scope

This short specification describes the electrical, optical and functional performance requirements for a 58.4cm (23”) TFT LCD color monitor with VGA&DVI compatible interface.

Description

The LCD monitor is designed with the latest LCD technology to provide a performance oriented product with no radiation. This will alleviate the growing health concerns. It is also a space saving design, allowing more desktop space, and comparing to the traditional CRT monitor, it consumes less power and gets less weight in addition MTBF target is 50k hours or more.

Chart of X233H

Panel	LTM230HT01 A03(003) SZ SEC
Signal Interface	D-Sub 15pin;DVI 24pin
Sync Type	Separate / Compatible
Color Temp User Adjust	Support
DDC	DDC2B
Speaker	Yes
Headphone Jack	No
Microphone Jack	No
USB Hub	support
Tilt / Swivel	Yes /No

Electrical Requirements of X233H

Standard Test Conditions

All tests shall be performed under the following conditions, unless otherwise specified.

Ambient light	Dark room (< 1 cd/m^2)
Viewing distance	40 cm for LCD performance, 20 cm for LCD failures
Warm up time	＞30 minutes
Analog Input signal	700 mVss
Control temperature	6500° K
User brightness control	The value under user mode
User contrast control	Set to factory preset value, which allows that the brightest two of 32 linear distributed gray-scales (0～ 700mv) can be distinguished.
Picture position and size	Factory preset value
Viewing angle	90° H and V
AC Supply voltage	230V± 5％, 50±3Hz
Ambient temperature	20+5℃
Humidity	65% ± 20%
Display mode	1920 x 1080, 60 Hz, all white
e-color mode	Set to “User” mode

Measurement systems

The units of measure stated in this document are listed below:

1 gamma = 1 nano tesla

1 tesla = 10,000 gauss

cm = in x 2.54

Lb = kg x 2.2

Degrees F = [°C x 1.8] + 32

Degrees C = [°F - 32]/1.8

u' = 4x/(-2x + 12y + 3)

v' = 9y/(-2x + 12y + 3)

x = (27u'/4)/[(9u'/2) - 12v' + 9]

y = (3v')/[(9u'/2) - 12v' + 9]

nits = cd/(m2) = Ft-L x 3.426

lux = foot-candle x 10.76

LCD Monitor General Specification

Model name	X233H	
LCD Panel	Driving system	TFT Color LCD
	Active Display Area	509.76 (H) × 286.74(V)
	Pixel pitch	0.2655(H) x 0.2655(W)
	Contrast Ratio	40000 : 1 Max(ACM)
	Response time	5ms(Typ.)
	Luminance of White	300(Typ.) cd/㎡
Input	Separate Sync.	H/V TTL
	H-Frequency	30kHz – 83kHz
	V-Frequency	56-75Hz
Viewing angle	(H)90 (V) 90(Type)	
Display Colors	16.7M	
Display mode	1920 x 1080 @60Hz	
EPA ENERGY STAR®	ON Mode	< 65W
	OFF Mode	< 1W
Contrast control	Set to factory preset value, which allows that the brightest two of 32 linear distributed gray-scales (0～ 700mv) can be distinguished.	
Power Source	100 V ~ 240 V，50 ± 3Hz, 60 ± 3Hz	
Environmental Considerations	Operating Temp: 0° to 40°C Storage Temp: -20° to 60°C Operating Humidity: 15% to 90% Storage Humidity: 15% to 90%	
Peak surge current	< 55A peak at 240 VAC and cold starting	
Power line surge	No advance effects (no loss of information or defect) with a maximum of 1 half-wave missing per second	

LCD Panel Specification of X233H

LTM230HT01 is a color active matrix liquid crystal display (LCD) that uses amorphous silicon TFT (Thin Film Transistor) as switching components. This model is composed of a TFT LCD panel, a driver circuit and a back light unit. The resolution of a 23" is 1920 x 1080 and this model can display up to 16.7 millions colors.

General Specifications

Items	Specification	Unit	Note
Pixel Pitch	0.2655(H) x 0.2655(W)	mm	
Active Display Area	509.76(H) x 286.74(V)	mm	
Surface Treatment	Haze 25% , Hard coating (3H)		
Display Colors	16.7M (Hi-FRC)	colors	
Number of Pixels	1,920 x 1,080	pixel	
Pixel Arrangement	RGB vertical stripe		
Display Mode	Normally White		
Power Consumption	34.5W		
Luminance of White	300(Typ.)	cd/㎡	

Block Diagram

TFT LCD Module

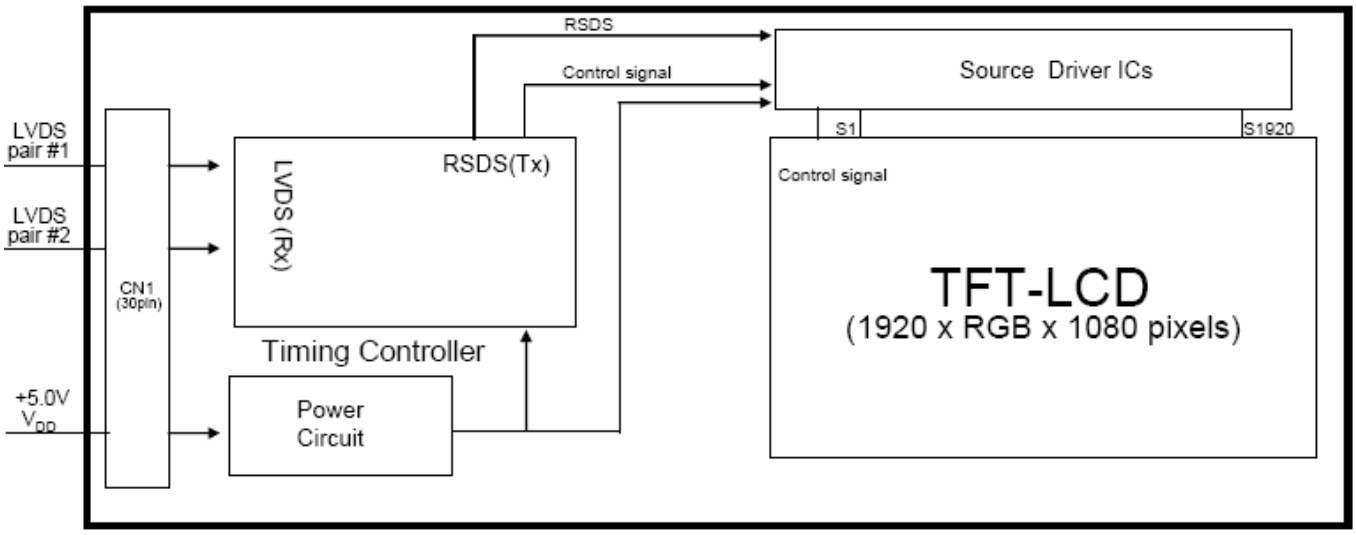

Back light Unit

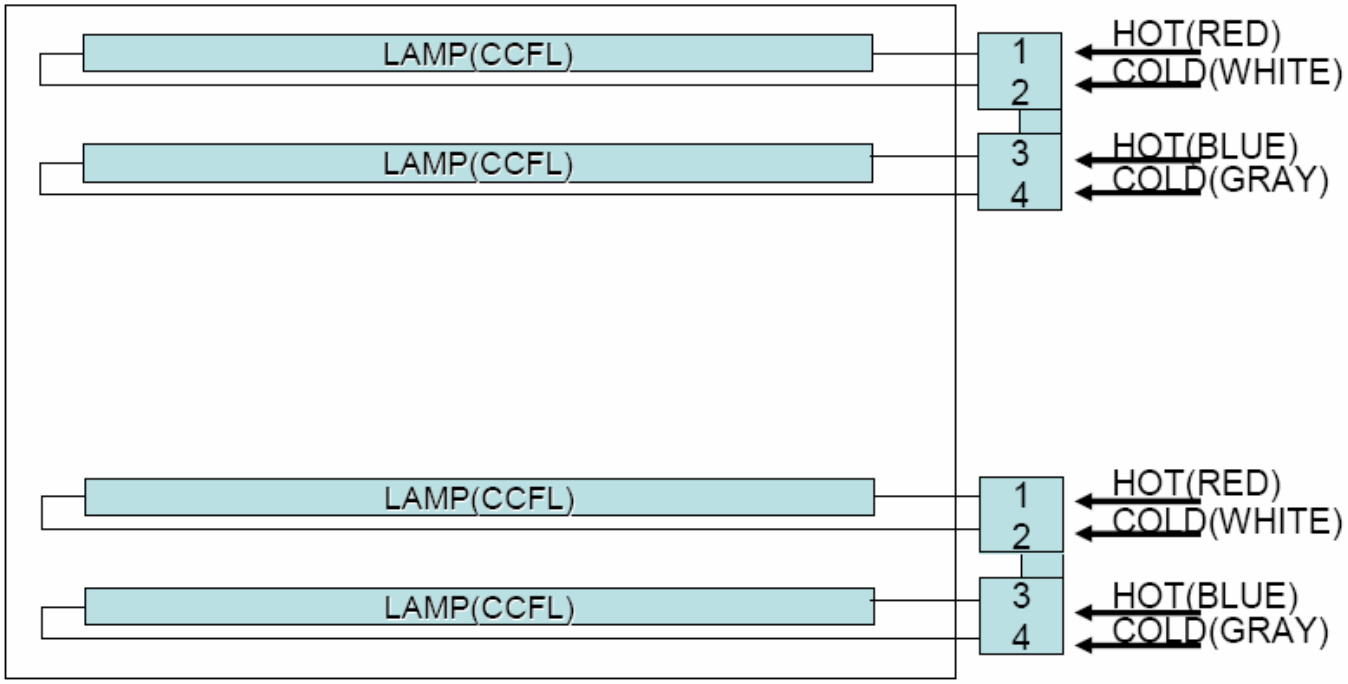

Electrical Characteristics

Item		Symbol	Min.	Typ.	Max.	Unit	Note
Voltage of Power Supply		V_{DD}	4.5	5.0	5.5	V	(1)
LVDS Input Characteristics	Differential Input Voltage for LVDS Receiver Threshold	High	-	-	+100	mV	(2)
		Low	-100	-	-	mV	
	LVDS skew	t_{SKEW}	-300		300	ps	(3)
	Differential input voltage	$\|V_{ID}\|$	200		600	mV	(4)
	Input voltage range (single-ended)	V_{IN}	0		2.4	V	(4)
	Common mode voltage	V_{CM}	0+ $\|V_{ID}\|/2$	1.2	2.4- $\|V_{ID}\|/2$	V	(4)
Current of Power Supply	(a) Black	I_{DD}	-	1,600	-	mA	(5),(6)
	(b) White		-	1,100	-	mA	
	(c) Dot		-	1,800	2,200	mA	
Vsync Frequency		f_V	49	60	75	Hz	
Hsync Frequency		f_H	54	60	75	kHz	
Main Frequency		f_{DCLK}	55	68	85	MHz	
Rush Current		I_{RUSH}	-	-	5.0	A	(7)

Optical Specifications

Item		Symbol	Condition	Min.	Typ.	Max.	Unit	Note
Contrast Ratio (Center of screen)		C/R	Normal $\theta_{L,R}=0$ $\theta_{U,D}=0$ Viewing Angle	600	1000	-		(3) SR-3
Response Time(On/Off)	On/Off	Tr + Tf		-	5	10	msec	(5) RD-80S
Luminance of White (Center of screen)		Y_L		250	300	-	cd/m^2	(6) SR-3
Color Chromaticity (CIE 1931)	Red	Rx		0.610	0.640	0.670		(7),(8) SR-3
		Ry		0.300	0.330	0.360		
	Green	Gx		0.270	0.300	0.330		
		Gy		0.570	0.600	0.630		
	Blue	Bx		0.120	0.150	0.180		
		By		0.030	0.060	0.090		
	White	Wx		0.283	0.313	0.343		
		Wy		0.299	0.329	0.359		
Color Chromaticity (CIE 1976)	Red	Ru'		-	0.451	-		
		Rv'		-	0.523	-		
	Green	Gu'		-	0.125	-		
		Gv'		-	0.564	-		
	Blue	Bu'		-	0.175	-		
		Bv'		-	0.158	-		
	White	Wu'		-	0.198	-		
		Wv'		-	0.468	-		
C.G.L (ACC ONLY)	White	△u'v'		-	-	0.02		(9)

Item		Symbol	Condition	Min.	Typ.	Max.	Unit	Note
Color Gamut		-		-	72	-	%	
Color Temperature		-		-	6500	-	K	
Viewing Angle	Hor.	θ_L	CR≥10(5)	70	80	-	Degrees	(8) EZ-Contrast
		θ_R		70	80	-		
	Ver.	θ_U		70	80	-		
		θ_D		70	80	-		
Brightness Uniformity (9 Points)		B_{uni}		-	-	25	%	(4) SR-3

Factory Preset Timing of X233H

VESA MODES							
			Horizontal		Vertical		
Mode	Resolution	Total	Nominal Frequency +/- 0.5kHz	Sync Polarity	Nominal Freq. +/- 1 Hz	Sync Polarity	Nominal Pixel Clock (MHz)
VGA	640x480@60Hz	800 x 525	31.469	N	59.940	N	25.175
	640x480@72Hz	832 x 520	37.861	N	72.809	N	31.500
SVGA	800x600@56Hz	1024 x 625	35.156	N/P	56.250	N/P	36.000
	800x600@60Hz	1056 x 628	37.879	P	60.317	P	40.000
	800x600@72Hz	1040 x 666	48.077	P	72.188	P	50.000
XGA	1024x768@60Hz	1344x806	48.363	N	60.004	N	65.000
	1024x768@70Hz	1328x806	56.476	N	70.069	N	75.000
VESA	1152x864@60Hz	1600 x 900	67.500	P	75.000	P	108.000
	1280x960@60Hz	1800 x 1000	60.000	P	60.000	P	108.000
	1280x720@60Hz	1650 x 750	44.955	P	59.940	P	74.176
SXGA	1280x1024@60Hz	1688 x 1066	63.981	P	60.020	P	108.000
WXGA	1280x800@60Hz	1680 x 831	49.702	P	59.810	N	83.500
	1360x768@60Hz	1792 x 795	47.712	P	60.015	P	85.500
WXGA+	1440x900@60Hz	1904 x 931	55.935	N	59.887	P	106.5
WSXGA+	1680x1050@60Hz	2240 x1089	65.290	N	59.954	P	146.250
UXGA	1600x1200@60Hz	2160 x 1250	75.000	P	60.000	P	162.000
	1920x1080@60Hz	2576 x 1120	67.158	N	59.963	P	173.000
	1920x1080@60Hz	2200 x 1125	67.500	N	60.000	N	148.500
	1920x1080@60Hz	2080 x 1111	66.587	P	69.934	N	138.500
IBM MODES							
DOS	720x400@70Hz	900 x 449	31.469	N	70.087	P	28.322
MAC MODES							
VGA	640x480@67Hz	864x525	35.000	N	66.667	N	30.240
ACER SPECIAL MODE							
	648x500@57.67 Hz	808 x 541	31.199	N	57.67	P	25.209
	1024x600@60Hz	1312 x 622	37.320	N	60.000	N	48.964

Monitor Block Diagram

The LCD MONITOR will contain a main board, a power board, a usb board and a key board which house the flat panel control logic, brightness control logic and DDC.

The power board will provide AC to DC Inverter voltage to drive the backlight of panel and the main board chips each voltage.

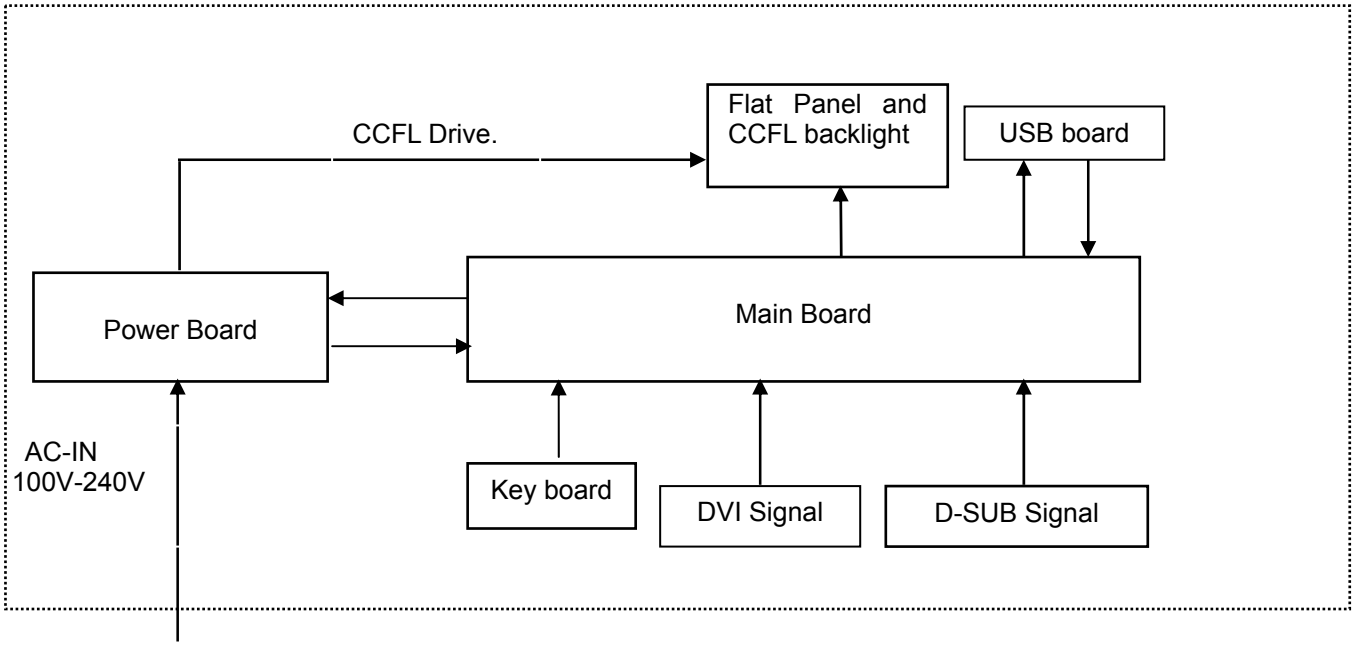

Main Board Diagram

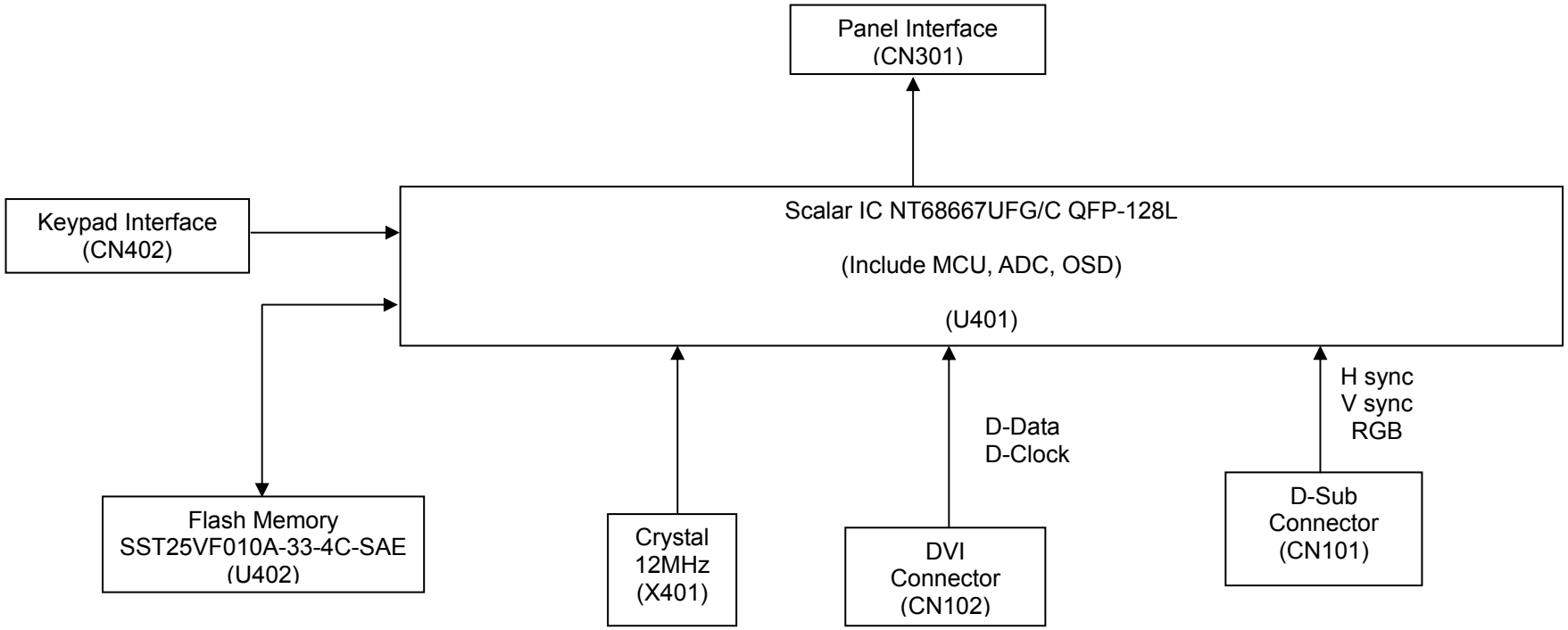

Software Flow Chart

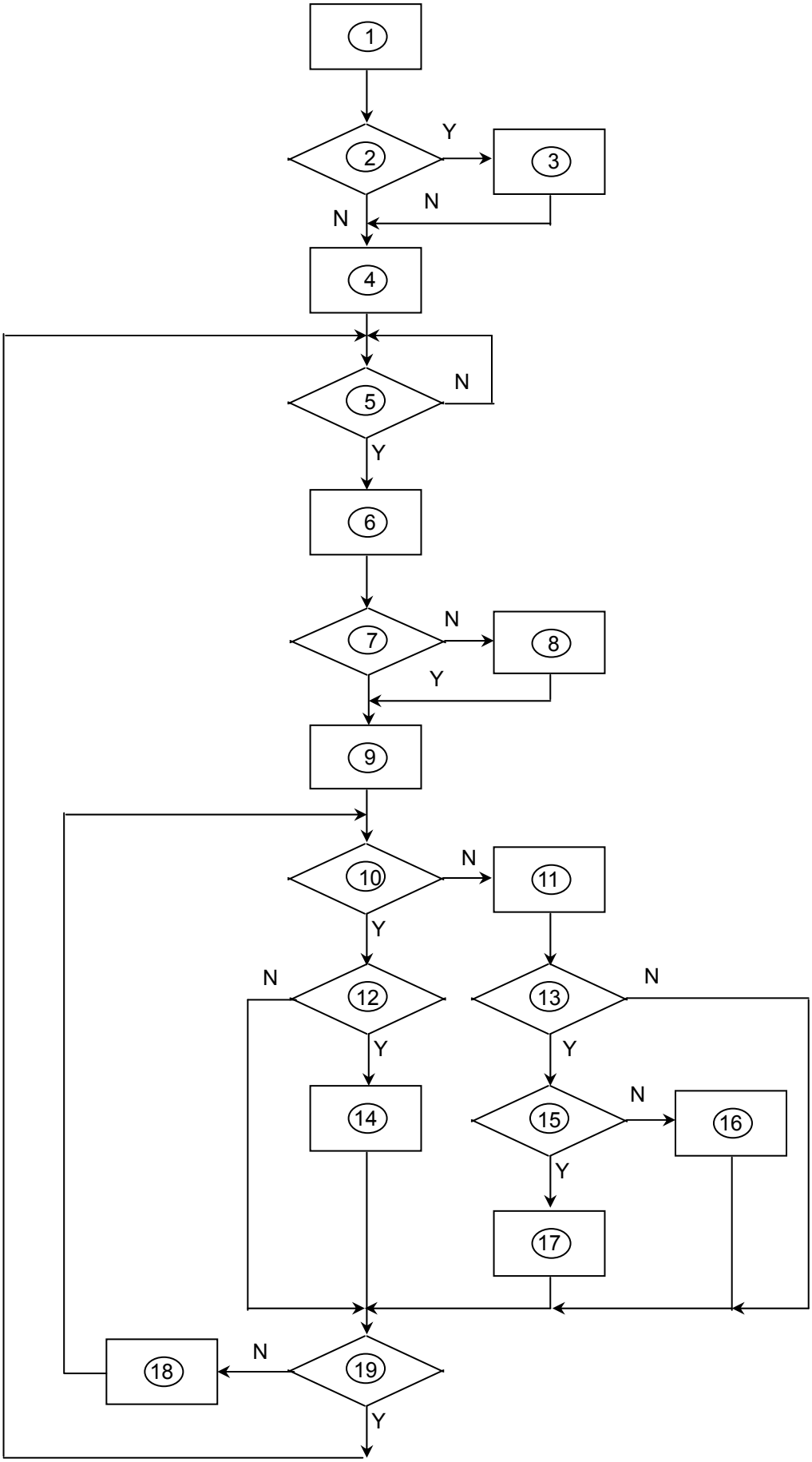

Remark:

1) MCU initializes.
2) Is the EEPROM blank?
3) Program the EEPROM by default values.
4) Get the PWM value of brightness from EEPROM.
5) Is the power key pressed?
6) Clear all global flags.
7) Are the AUTO and SELECT keys pressed?
8) Enter factory mode.
9) Save the power key status into EEPROM. Turn on the LED and set it to green color. Scalar initializes.
10) In standby mode?
11) Update the lifetime of back light.
12) Check the analog port, are there any signals coming?
13) Does the scalar send out an interrupt request?
14) Wake up the scalar.
15) Are there any signals coming from analog port?
16) Display "No connection Check Signal Cable" message. And go into standby mode after the message disappears.
17) Program the scalar to be able to show the coming mode.
18) Process the OSD display.
19) Read the keyboard. Is the power key pressed?

Main Board Layout

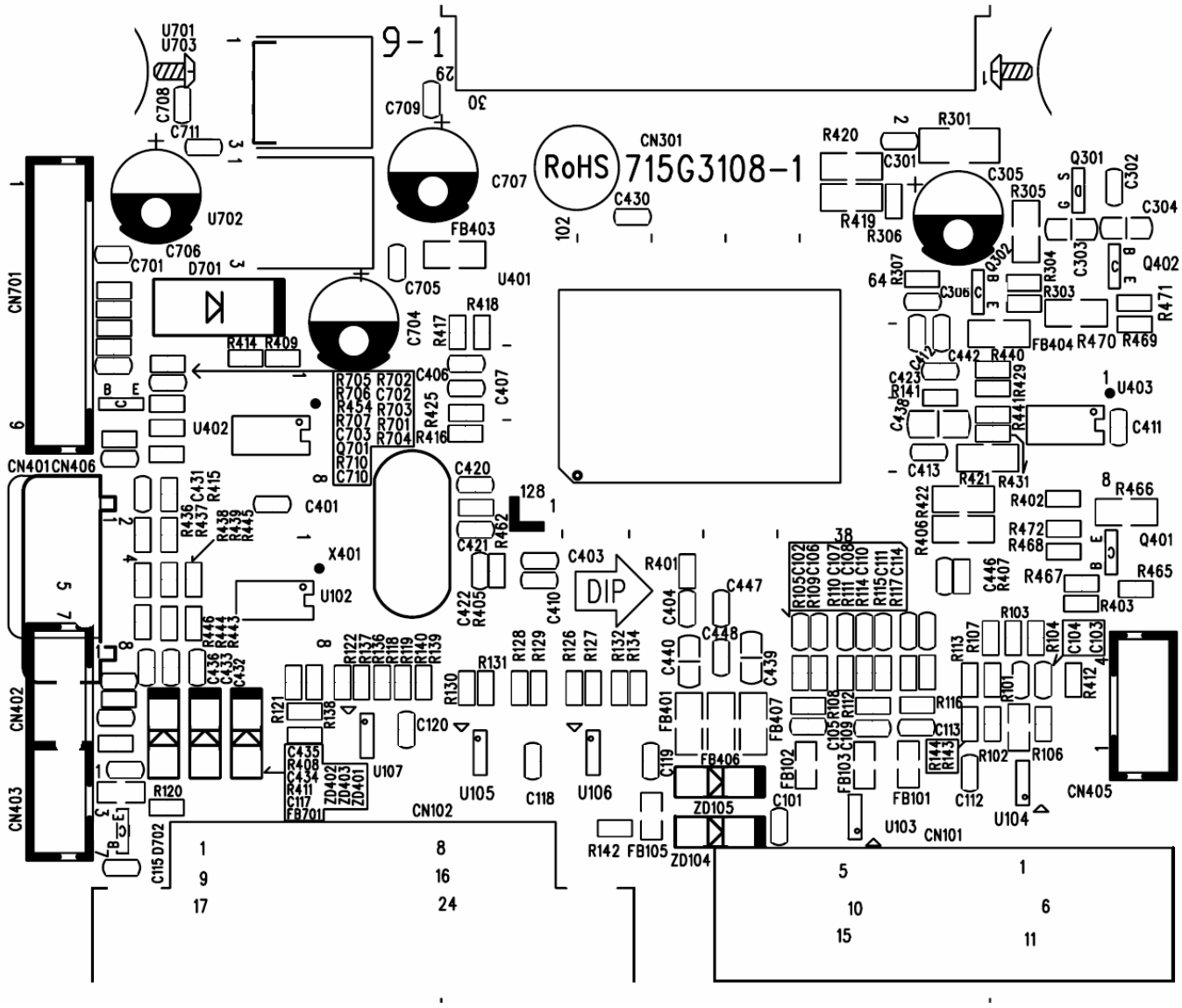

Symbol	Description	Symbol	Description
U401	IC NT68667UFG/C QFP-128L	CN402	WAFER
U703	IC AP1117D33L-13 TO252-3L DIODES	CN701	WAFER 9P RIGHT ANELE PITCH
U103	IC AZC099-04S SOT23-6L	CN301	CONNECTOR
U104	IC AZC099-04S SOT23-6L	X401	CRYSTAL 12MHz HC-49US ARG6-120
U402	SST25VF010A-33-4C-SAE	CN101	D-SUB 15PIN VERTICAL CONN WITH SCREW
U702	IC AZ1117D-1.8-E1	CN102	DVI 24PIN CONN F

Installation

To install the monitor to your host system, please follow the steps as given below:

Steps

1. 1-1 Connect Video Cable
   a. Make sure both the monitor and computer are powered-OFF.
   b. Connect the VGA video cable to the computer.
   1-2 Digital Cable (Only Dual-Input Model)
   a. Make sure both the monitor and computer are powered-OFF.
   b. Connect one end of the 24-pin DVI cable to the back of the monitor and connect the other end to the computer's port.
2. Connect power cord
   Connect the power cord to the monitor, then to a properly grounded AC outlet.
3. Power-ON Monitor and Computer
   Power-ON the monitor first, then power-ON the computer.
   This sequence is very important.
4. If the monitor still does not function properly, please refer to the troubleshooting section to diagnose the problem.

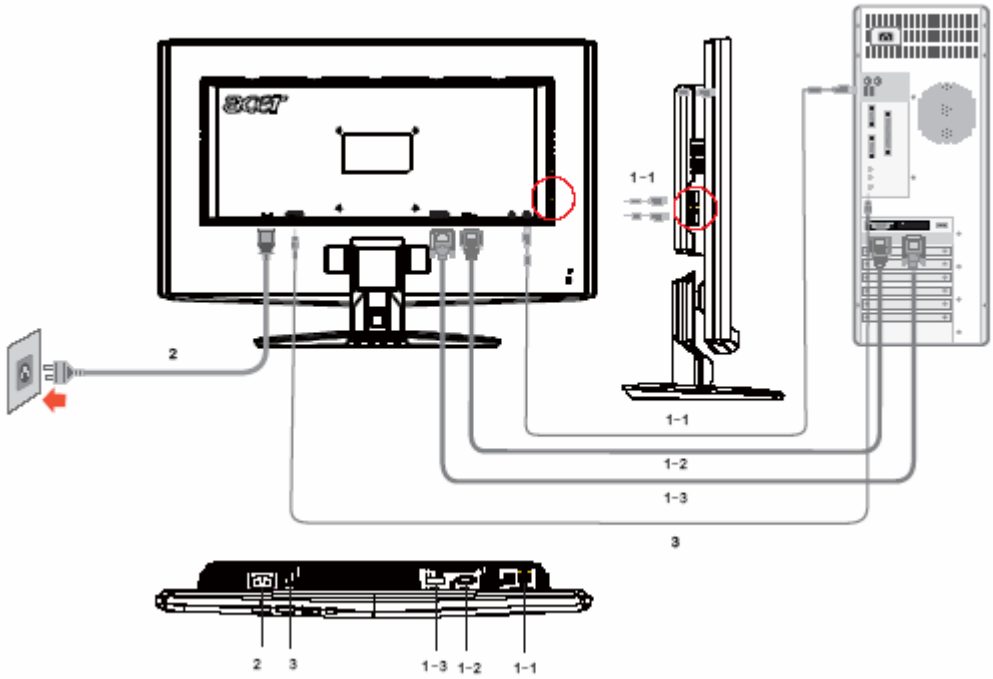

Attaching / Removing the Base

Install:
Align the release button on the bottom of the monitor with the corresponding
slots on the bottom of the base.

Remove:
Depress the release button as indicated first before removing the base and follow the arrow direction to remove it.

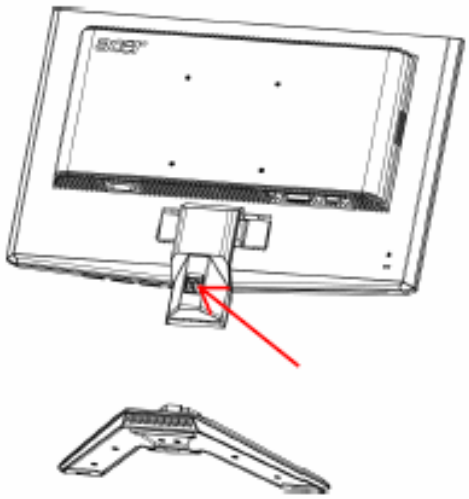

SCREEN POSITION ADJUSTMENT

In oder to optimize the best viewing position, you can adjust the tilt of the monitor by using both of your hands to hold the edges of the monitor as shown in the figure below.
The monitor can be adjusted to 15 degrees up or 5 degrees down as indicated by arrow below.

Press the power button to turn the monitor on or off. The other control buttons are located at front panel of the monitor. By changing these settings, the picture can be adjusted to your personal preferences.

- The power cord should be connected.
- Connect the video cable from the monitor to the video card.
- Press the power button to turn on the monitor position. The power indicator will light up.

External Controls

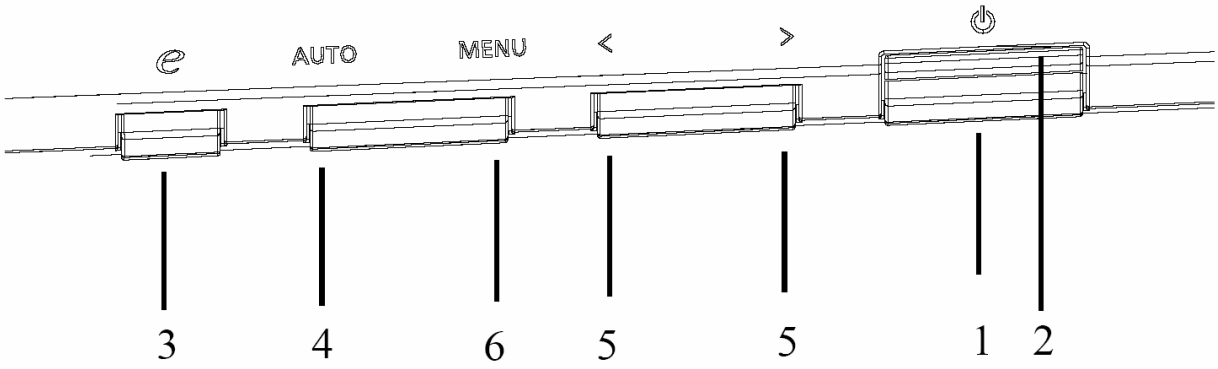

Front panel controls

1. Power Switch:

To turn ON or OFF the power.

2. Power LED:

Lights up to indicate the power is turned ON.

3. Empowering / Exit:

1) When OSD menu is in active status, this button will act as EXIT-KEY(EXIT OSD menu).

2) When OSD menu is in off status, press this button to select scenario mode.

4. Auto Adjust button / Exit:

1) When OSD menu is in active status, this button will act as EXIT-KEY (EXIT OSD menu).

2) When OSD menu is in off status, press this button for 2 seconds to activate the Auto Adjustment function. The Auto Adjustment function is used to set the HPos, VPos, Clock and Focus.

5. < / >

1) Press < or > to select the desired function. Press < or > to change the settings of the current function.

6. MENU / ENTER:

Activate OSD menu when OSD is OFF or activate/de-activate adjustment function when OSD is ON.

eColor Management (OSD)

Operation instructions

Step 1: Press “ Key” to open the Acer e-Color Management OSD and access the scenario modes
Step 2: Press “<” or “>” to select the mode
Step 3: Press “Auto Key ” to confirm the mode and run Auto Adjust

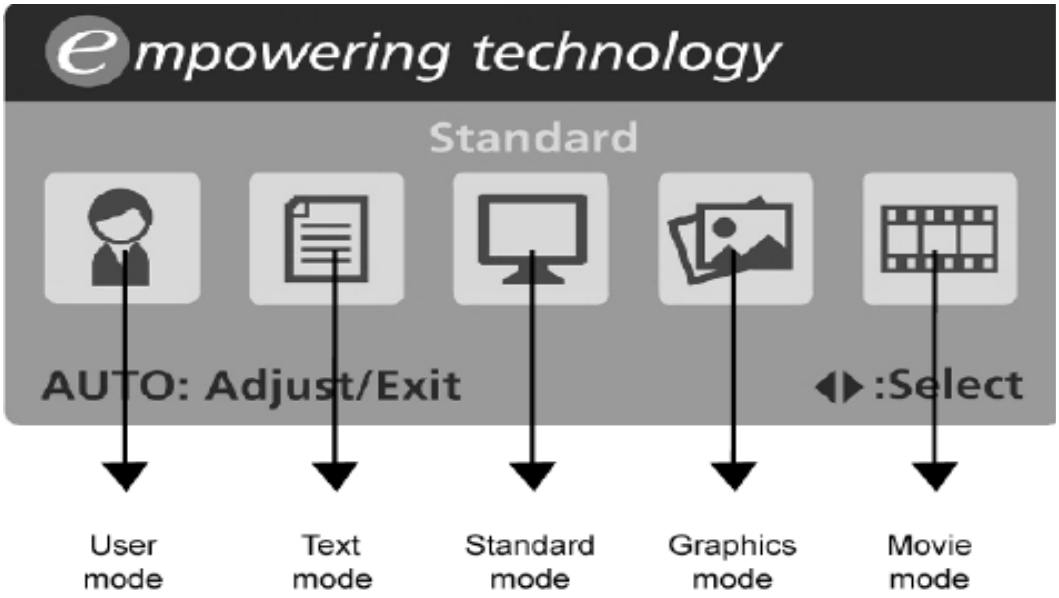

Main Menu icon	Sub Menu icon	Sub Menu item	Description
	N/A	User mode	User defined. Settings can be fine-tuned to suit any situation
	N/A	Text mode	Optimal balance of brightness and contrast prevent eyestrain. The most comfortable way to read onscreen text
	N/A	Standard mode	Default Setting. Reflects native display capability
	N/A	Grahpic mode	Enhances colors and emphasize fine detail
	N/A	Movie mode	Displays scenes in clearest detail. Pictures and photographs appear in vibrant colors with sharp detail)

How to Adjust a Setting

1. Press the MENU-button to activate the OSD window.
2. Press < or > to select the desired function.
3. Press the MENU-button to select the function that you want to adjust.
4. Press < or > to change the settings of the current function.
5. To exit and save, select the exit function. If you want to adjust any other function, repeat steps 2-4.

- P/X Series OSD behave
  When user press "MENU" button on front bezel

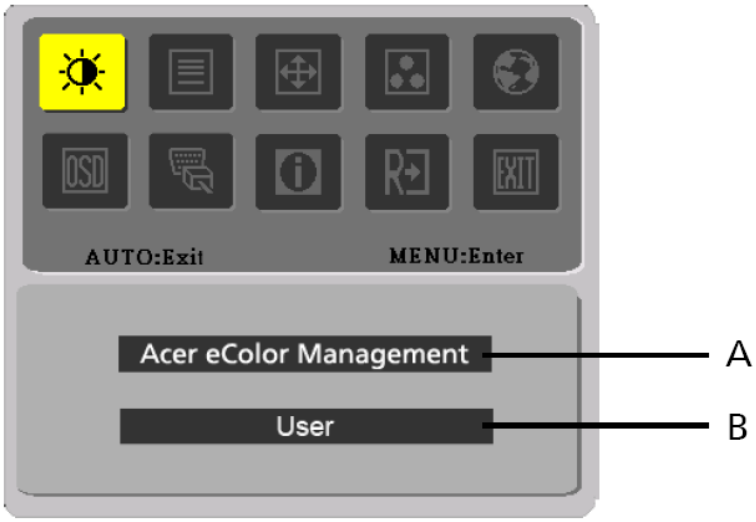

A. Acer eColor Management

If selected to "Acer eColor Management " item, will appear the Acer eColor" OSD

B. USER

If selected to "USER" item, will appear the Standard OSD

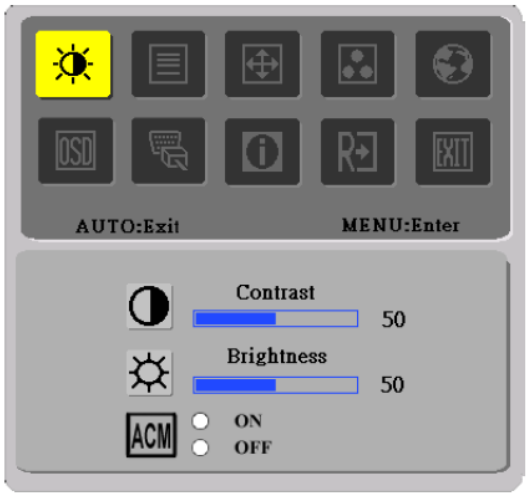

I. Only Analog Input Model

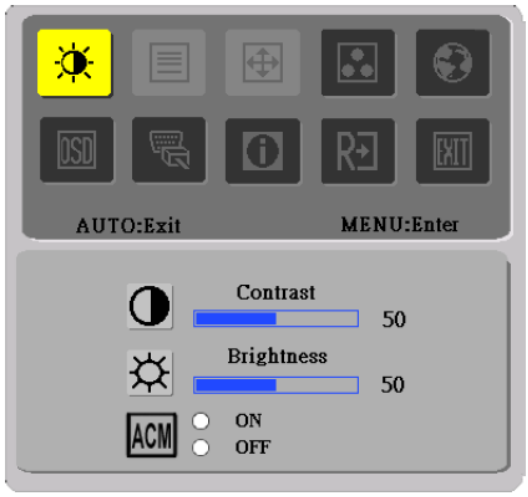

II. Only Dual Input Model

Adjusting the picture

Main Menu icon	Sub Menu icon	Sub Menu item	Description
		Contrast	Adjusts the contrast between the foreground andbackground of the screen image.
		Brightness	Adjusts the background brightness of the screenimage.
	ACM	ACM	ACM (Adaptive Contrast Management): ACM ON/OFF Switch, default is "OFF"
		Focus	Adjusts picture Focus.(available in Analog mode only)
		Clock	Adjusts picture Clock.(available in Analog mode only)
		H. Position	Adjust the horizontal position. (available in Analog mode only)
		V. Position	Adjust the vertical position. (available in Analog mode only)
	N/A	Warm	Set the color temperature to warm white.
	N/A	Cool	Set the color temperature to cool white.
	R	User /Red	Adjusts Red/Green/Blue intensity.
	G	User /Green	
	B	User /Blue	
	N/A	English	Multi-language selection.
	N/A	繁體中文	
	N/A	Deutsch	
	N/A	Francais	
	N/A	Espanol	
	N/A	Italiano	
	N/A	简体中文	
	N/A	日本語	
	N/A	Suomi	EMEA version OSD only
	N/A	Nederlands	
	N/A	Pyccknn	

Main Menu Icon	Sub Menu Icon	Sub Menu Item	Description
		H. Position	Adjust the horizontal position of the OSD.
		V. Position	Adjust the vertical position of the OSD.
		OSD Timeout	Adjust the OSD timeout.
	N/A	Input Source	Select input signal from D-Sub or DVI-D or HDMI
	N/A	Wide Mode	Select Wide mode setting for Full screen, Aspect ratio or 1:1 mode
	N/A	DDC/CI	Turn ON/OFF DDC/CI support
	N/A	Informati-on	Show the resolution, H/V frequency andinput port of current input timing.
	N/A	Reset	Clear each old status of Auto-configurationand set the color temperature to Cool.
	N/A	Exit	Save user adjustment and OSD disappear.

How To Optimize The DOS-Mode

Plug And Play

Plug & Play DDC2B Feature

This monitor is equipped with VESA DDC2B capabilities according to the VESA DDC STANDARD. It allows the monitor to inform the host system of its identity and, depending on the level of DDC used, communicate additional information about its display capabilities.

The DDC2B is a bi-directional data channel based on the I²C protocol. The host can request EDID information over the DDC2B channel.

This monitor will appear to be non-functional if there is no video input signal. In order for this monitor to operate properly, there must be a video input signal.

This monitor meets the Green monitor standards as set by the Video Electronics Standards Association (VESA) and/or the United States Environmental Protection Agency (EPA) and The Swedish Confederation Employees (NUTEK). This feature is designed to conserve electrical energy by reducing power consumption when there is no video-input signal present. When there is no video input signals this monitor, following a time-out period, will automatically switch to an OFF mode. This reduces the monitor's internal power supply consumption. After the video input signal is restored, full power is restored and the display is automatically redrawn. The appearance is similar to a "Screen Saver" feature except the display is completely off. Pressing a key on the keyboard, or clicking the mouse restores the display.

Using the Right Power Cord

The accessory power cord for the Northern American region is the wallet plug with NEMA 5-15 style and is UL listed and CSA labeled. The voltage rating for the power cord shall be 125 volts AC.
Supplied with units intended for connection to power outlet of personal computer: Please use a cord set consisting of a minimum No. 18 AWG, type SJT or SVT three conductors flexible cord. One end terminates with a grounding type attachment plug, rated 10A, 250V, and CEE-22 male configuration. The other end terminates with a molded-on type connector body, rated 10A, 250V, having standard CEE-22 female configuration.
Please note that power supply cord needs to use VDE 0602, 0625, 0821 approval power cord in European counties.

Enter into the factory mode:

Turn off the power, press the “e-color” and turn the power on. The factory OSD will be at the left top of the panel.

This chapter contains step-by-step procedures on how to disassemble the X233H monitor for maintenance.

The tool for disassembly is as follows:

Screwdriver, hexagonal screwdriver, Putty knife.

Disassembly Procedure

1. Remove the hinge assembly.

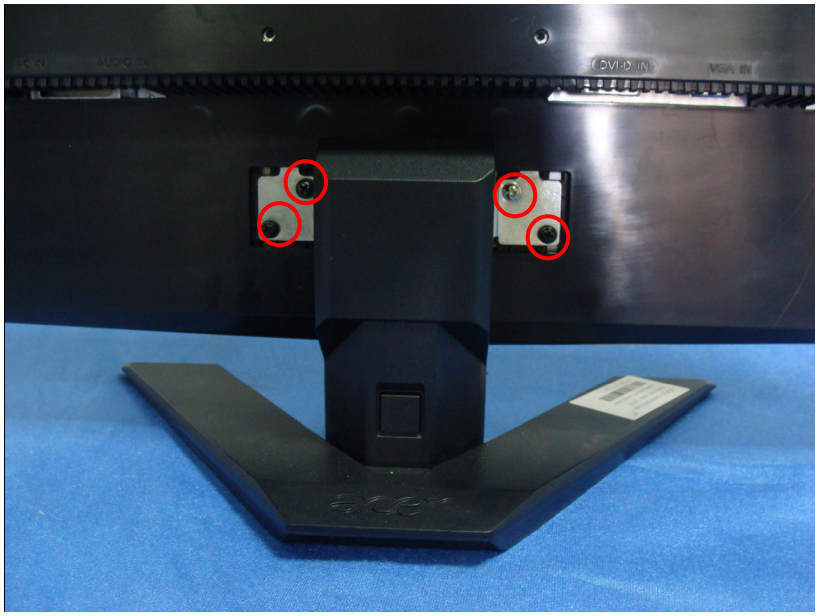

2. Remove the rear cover and bezel.

   The arrows in blue are the hook that we should put attention to when remove the rear cover. Use plastic putty knife to release hooks, then you can easily remove the rear cover.

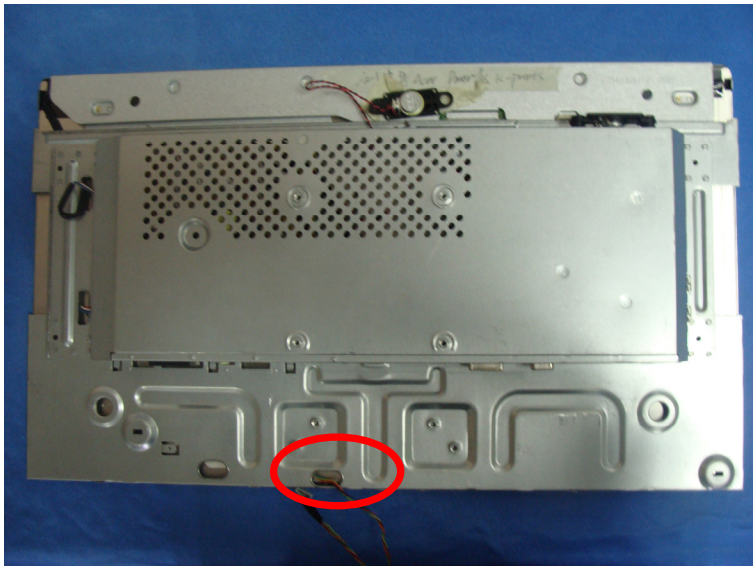

3. Remove the lamp connectors and remove the screws to remove the panel. Put attention to the LVDS cable.

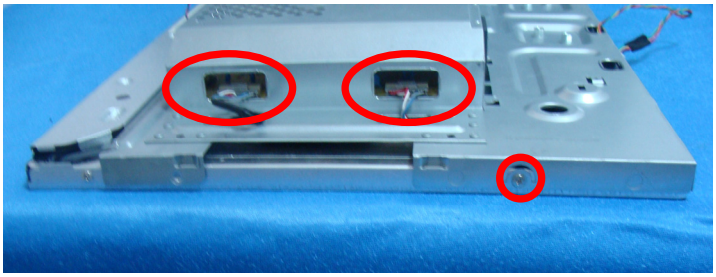

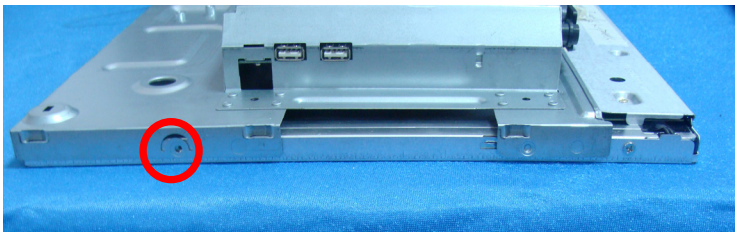

4. Remove the screws to remove the main board and power board.

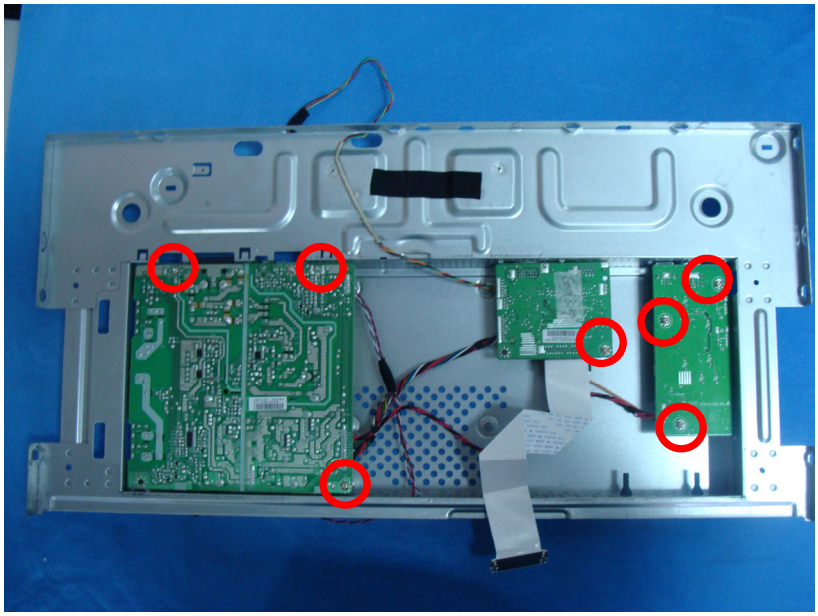

5. The panel

Troubleshooting

Chapter 4

This chapter provides troubleshooting information for the X233H:

1. No Power

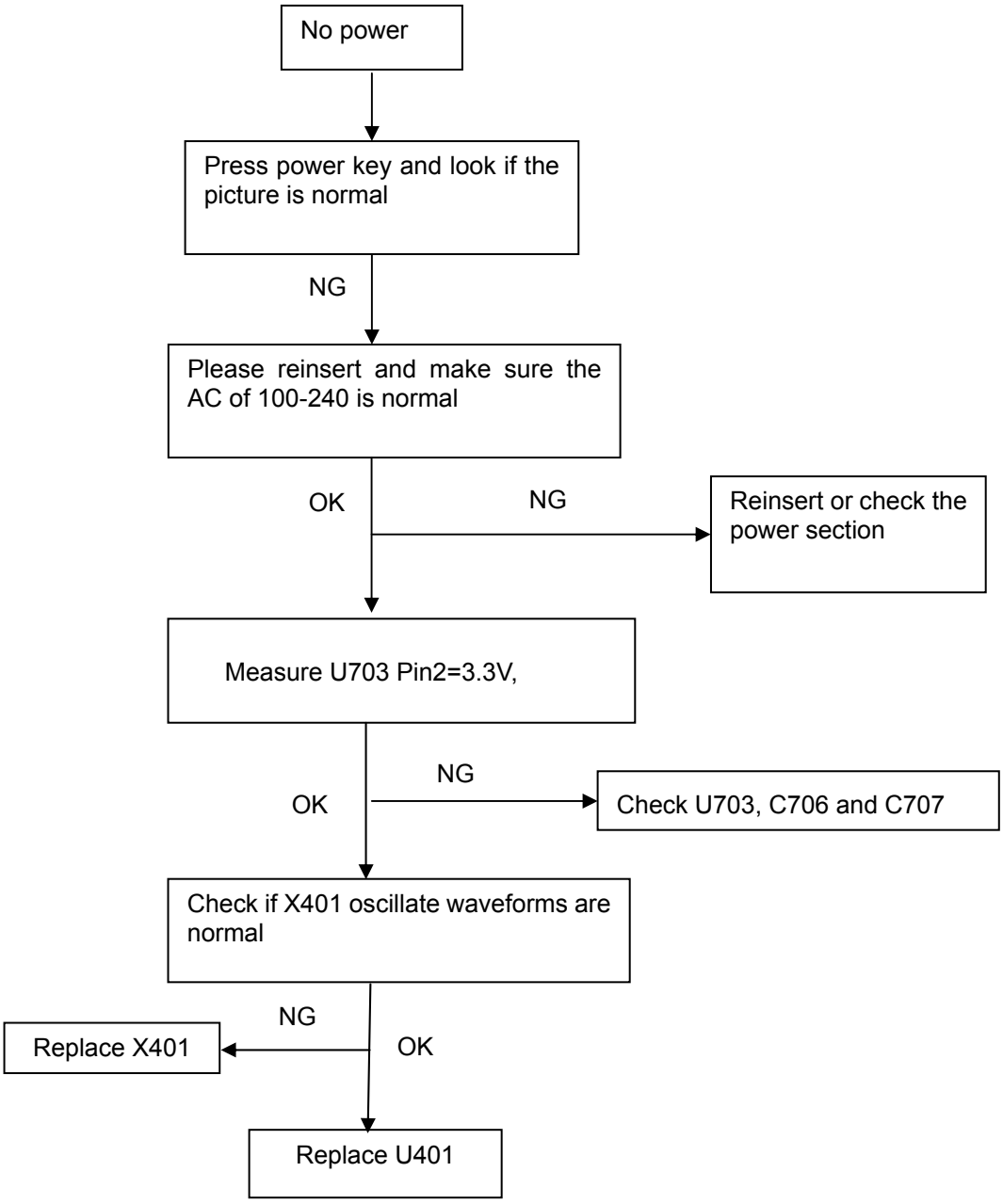

2. No Picture (LED is orange)

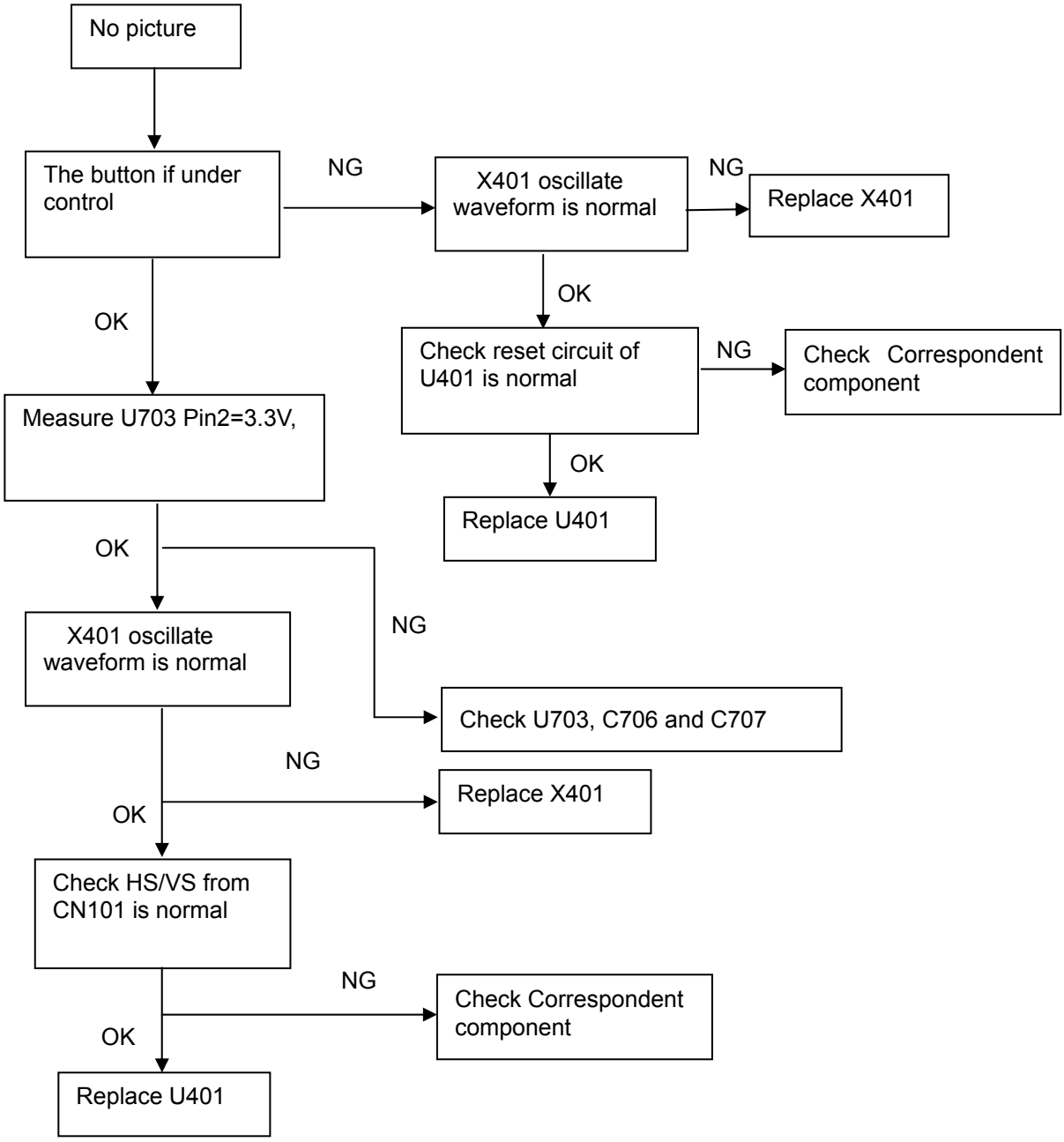

3. Panel Power Circuit

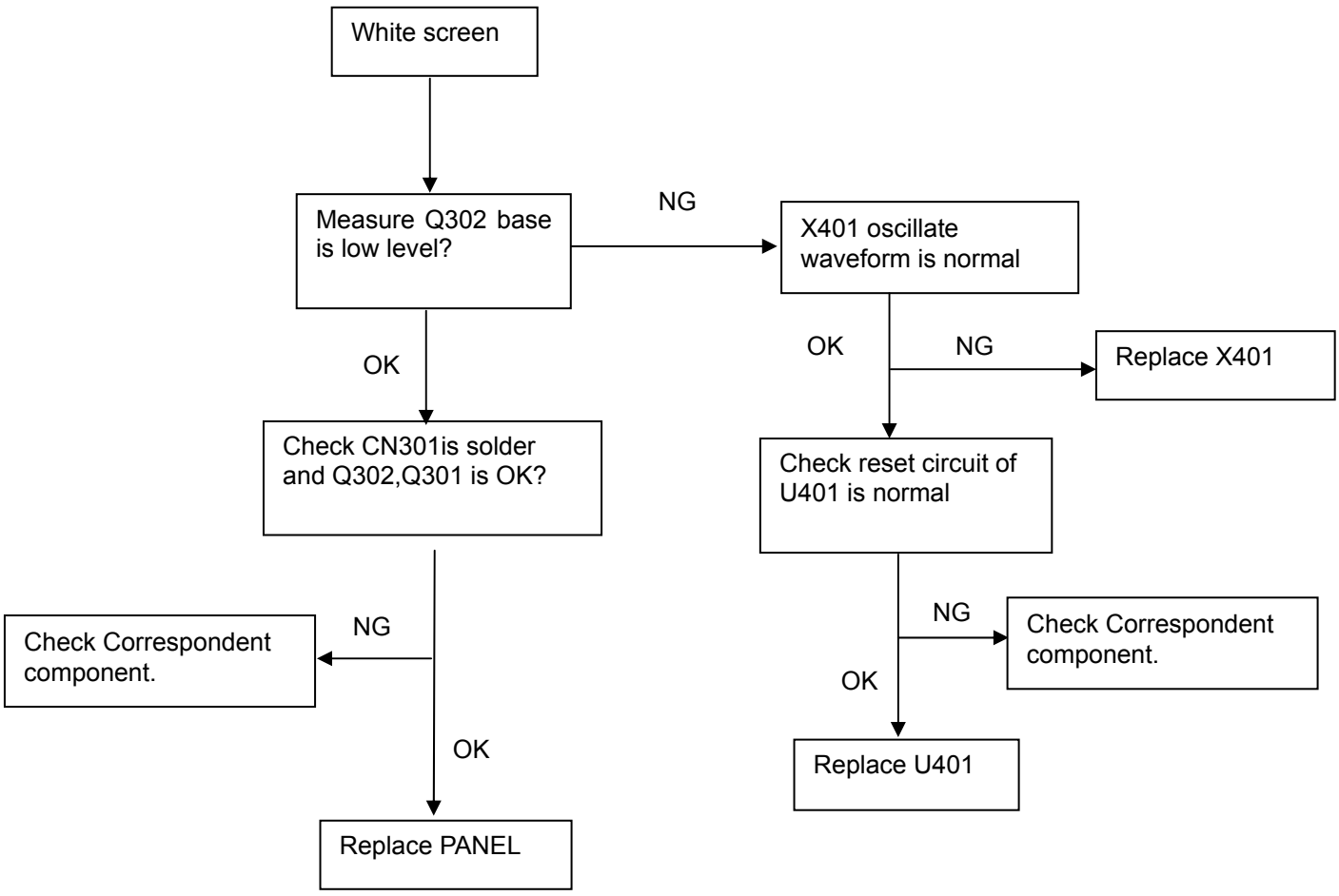

4. Key Board

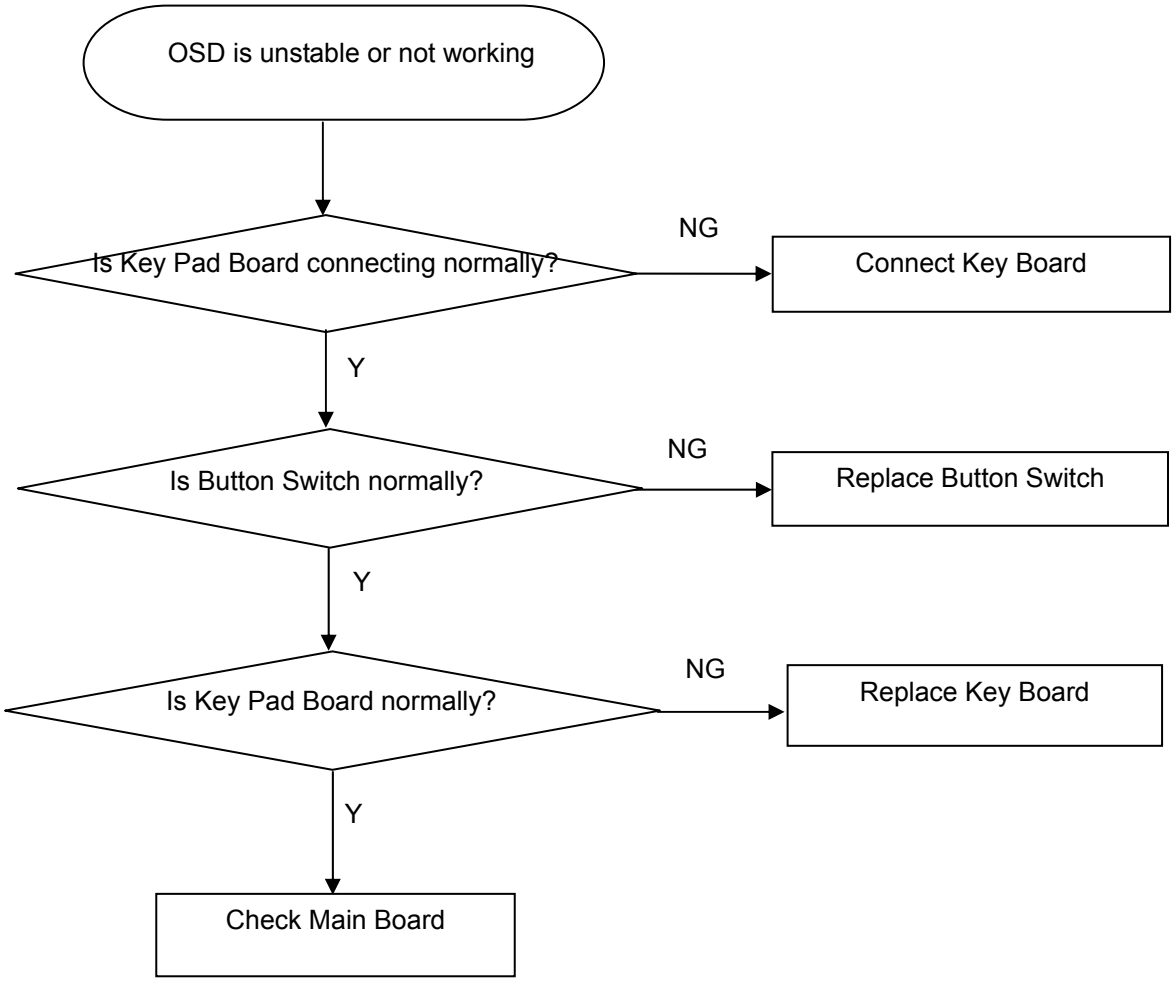
OSD is unstable or not working
Is Key Pad Board connecting normally?
NG
Connect Key Board
Y
Is Button Switch normally?
NG
Replace Button Switch
Y
Is Key Pad Board normally?
NG
Replace Key Board
Y
Check Main Board

5. Power Board

1) No power

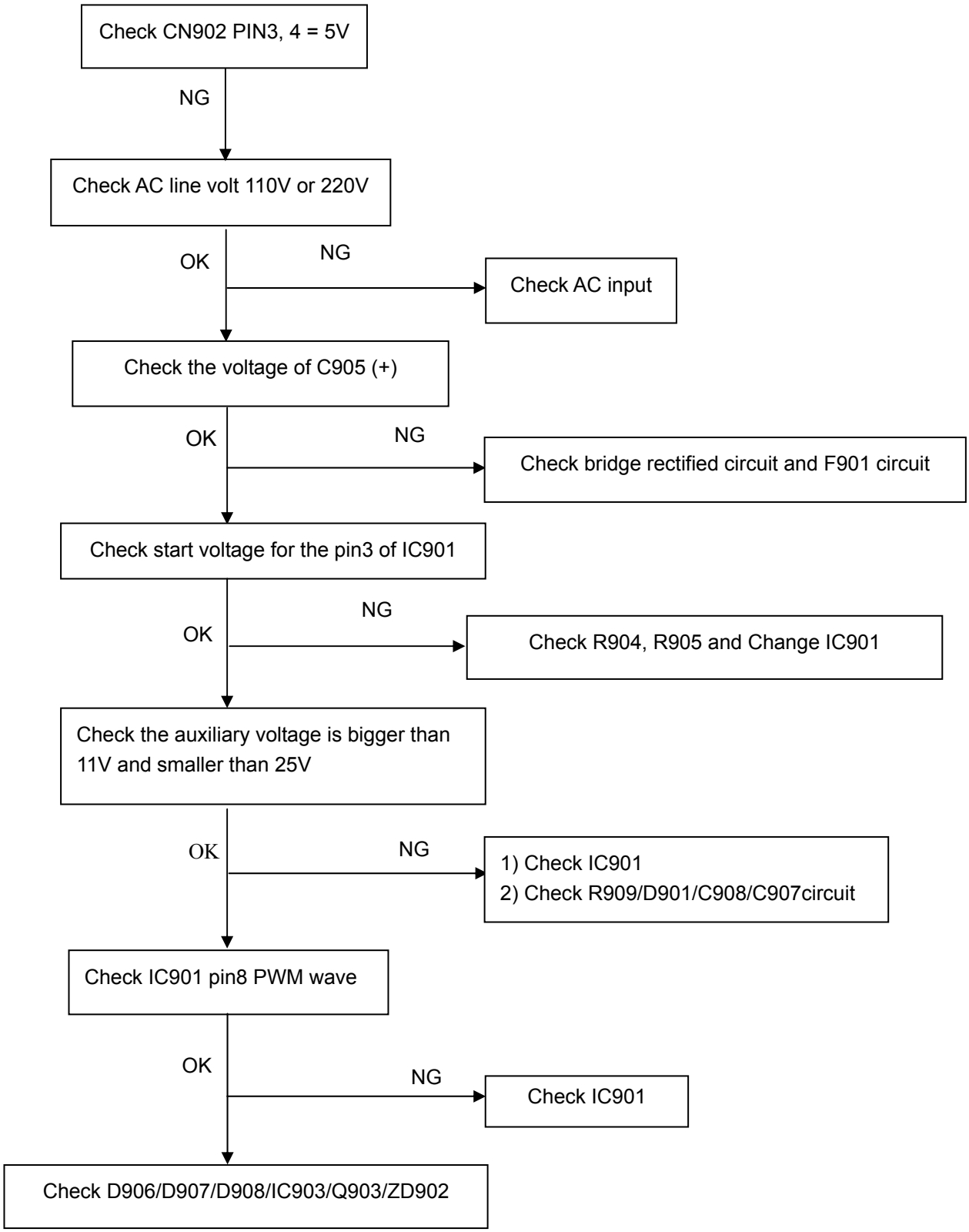

2.) No Backlight

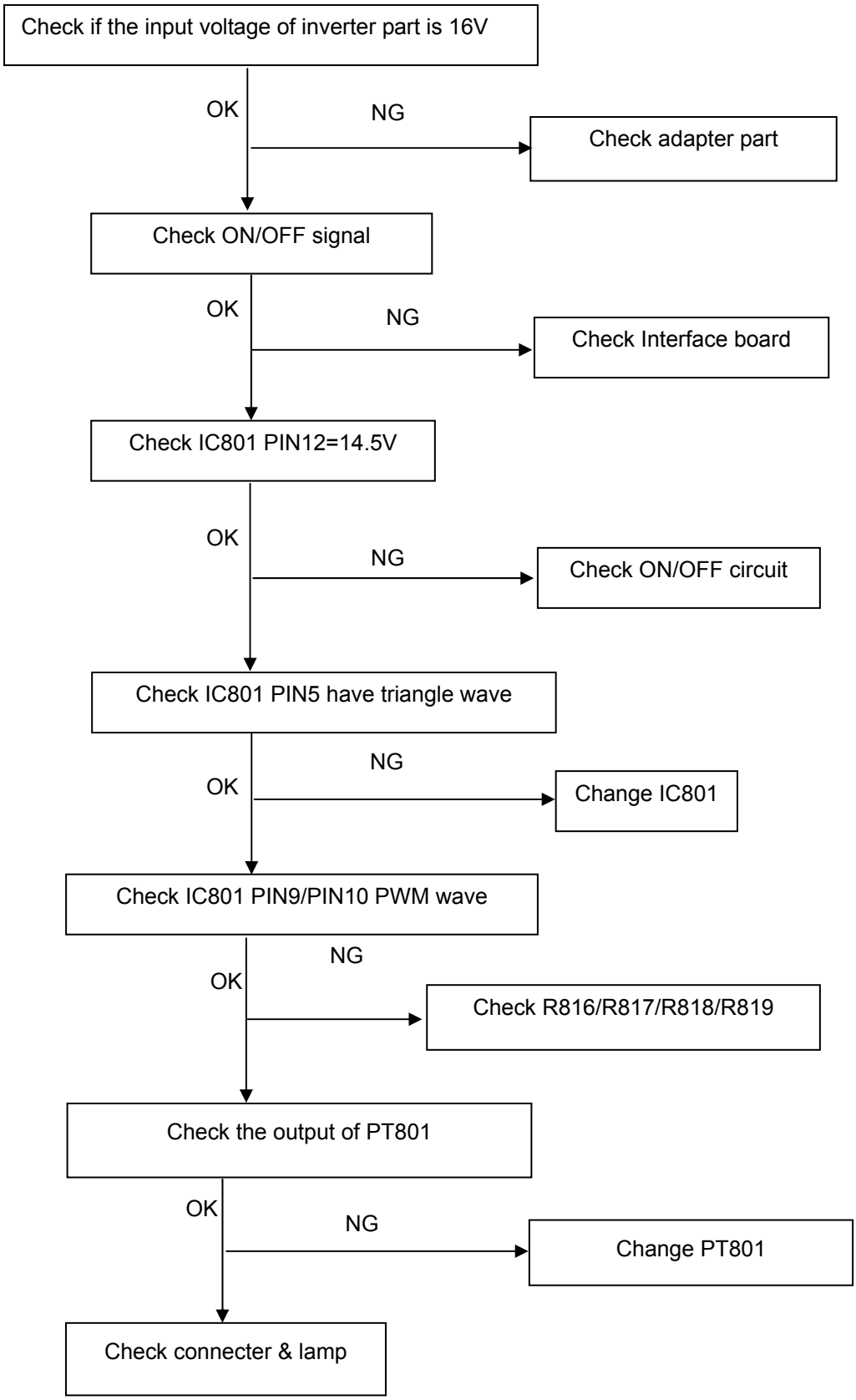

D-SUB CONNECTORS

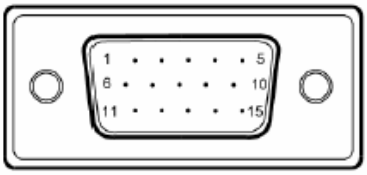

15-Pin Color Display Signal Cable

PIN NO.	DESCRIPTION	PIN NO.	DESCRIPTION
1.	Red	9.	+5V
2.	Green	10.	Logic Ground
3.	Blue	11.	Monitor Ground
4.	Monitor Ground	12.	DDC-Serial Data
5.	DDC-return	13.	H-Sync
6.	R-Ground	14.	V-Sync
7.	G-Ground	15.	DDC-Serial Clock
8.	B-Ground		

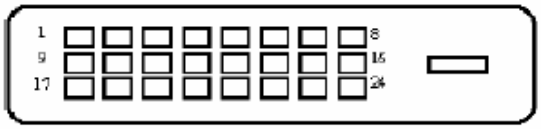

24-Pin Color Display Signal Cable

PIN	Meaning	PIN	Meaning
1.	TMDS Data2-	13.	TMDS Data3+
2.	TMDS Data2+	14.	+5V Power
3.	TMDS Data 2/4 Shield	15.	GND(return for +5V hsync.vsync)
4.	TMDS Data4-	16.	Hot Plug Detect
5.	TMDS Data4+	17.	TMDS Data0-
6.	DDC Clock	18.	TMDS Data0+
7.	DDC Data	19.	TMDS Data 0/5 Shield
8.	Analogue Vertical Sync	20.	TMDS Data5-
9.	TMDS Data1-	21.	TMDS Data5+
10.	TMDS Data1+	22.	TMDS Clock Shield
11.	TMDS Data 1/3 Shield	23.	TMDS Clock+
12.	TMDS Data3-	24.	DDC TMDS Clock-

FRU (Field Replaceable Unit) List Chapter 6

This chapter gives you the FRU (Field Replaceable Unit) listing in global configurations of X233H. Refer to this chapter whenever ordering for parts to repair or for RMA (Return Merchandise Authorization).

NOTE: Please note WHEN ORDERING FRU PARTS, that you should check the most up-to-date information available on your regional web or channel (http://aicsl.acer.com.tw/spl/). For whatever reasons a part number change is made, it will not be noted in the printed Service Guide. For ACER AUTHORIZED SERVICE PROVIDERS, your Acer office may have a DIFFERENT part number code from those given in the FRU list of this printed Service Guide. You MUST use the local FRU list provided by your regional Acer office to order FRU parts for repair and service of customer machines.

NOTE: To scrap or to return the defective parts, you should follow the local government ordinance or regulations on how to dispose it properly, or follow the rules set by your regional Acer office on how to return it.

Exploded Diagram (Model: X233H)

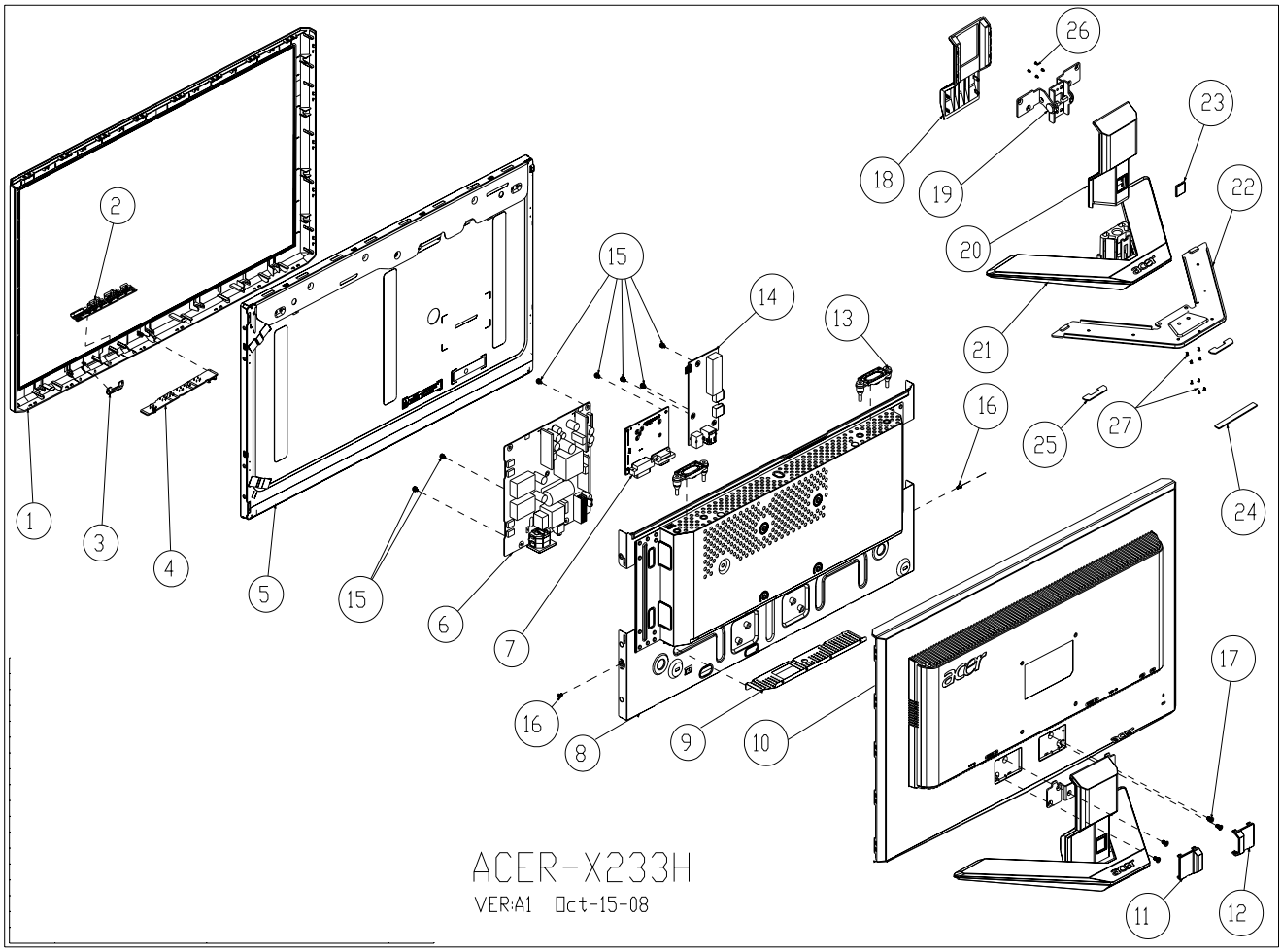

ITEM	PART NO.	DESCRIPTION	Q`TY
1	BEZEL L23WA-8ACER3-S4	A34G1084 RXA1B0130	1
2	KEY BUTTON	Q33G0237 RX 1L0100	1
3	LED LENS	A33G0270 1 1L0100	1
4	KEY BOARD	KEPC7QK1	1
5	PANEL LTM230HT01 A03(003) SZ SEC	750GLS230HT132N000	1
6	POWER BOARD	PWPC8E41MQHU	1
7	MAIN BOARD	CBPCRNDAEQ1	1
8	MAIN_FRAME_SAM	A15G0563101102	1
9	MAIN_FRAME_SHIELD	A85G0141101	1
10	REAR COVER L23WA-8ACER3-S4	A34G1085 RX 3B0100	1
11	HINGE COVER L	A33G0271 RX 1L0200	1
12	HINGE COVER R	A33G0271 RX 2L0200	1
13	SPK 8OHM 2W 40X20X18 350 320MM KUAIDA	078G 518501 K	1
14	USB BOARD	USB7QK4	1
15	SCREW	0Q1G 130 8120	7
16	SCREW	0M1G 130 6120	2
17	SCREW	0M1G 140 8125	4
18	STAND FRONT	A34G0473 RX 1B0100	1
19	HINGE	A37G0050 4	1
20	STAND REAR	A34G0474 RX 1B0100	1
21	BASE	A34G0475 RX 1B0130	1
22	BASE BKT	A15G0263201	1
23	BASE BUTTON	A33G0266 RX 1L0100	1
24	RUBER FOOT-1	A12G0006 1	1
25	RUBER FOOT-2	A12G0007 1	2
26	SCREW	0Q1G 140 10120	6
27	SCREW	0Q1G 130 8120	8

Part List

Above picture show the description of the following component.

Picture	Description	Part No.
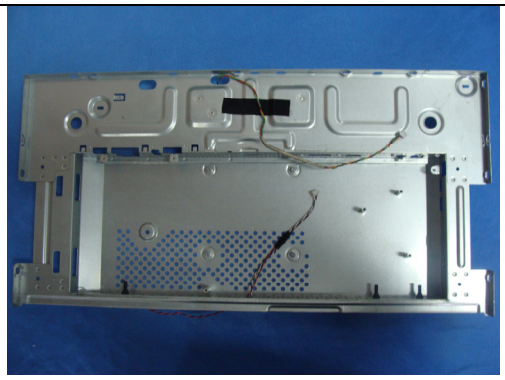	Main_frame_Sam	A15G0563101102
	Bezel	A34G1084 RXA1B0130
	Panel	750GLS230HT132N000
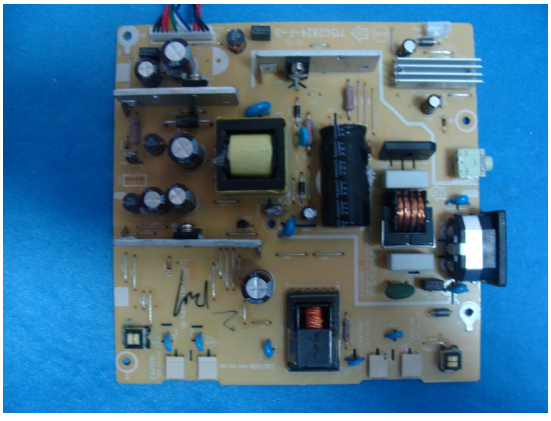	Power Board	PWPC8E41MQHU

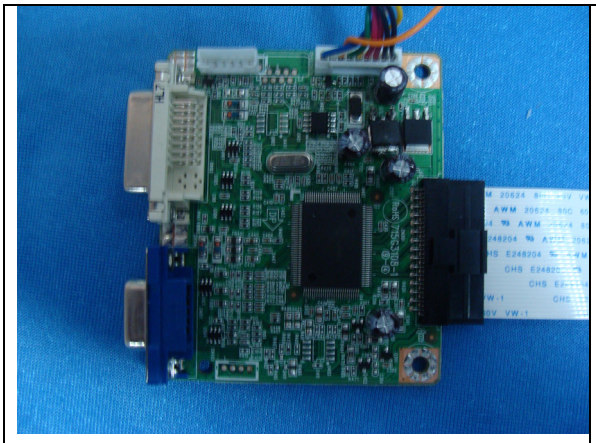	Main Board	CBPCRNDAEQ1
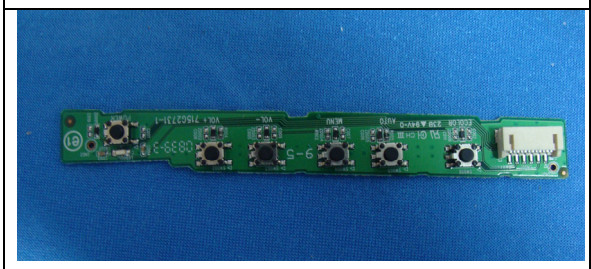	Key Board	KEPC7QK1
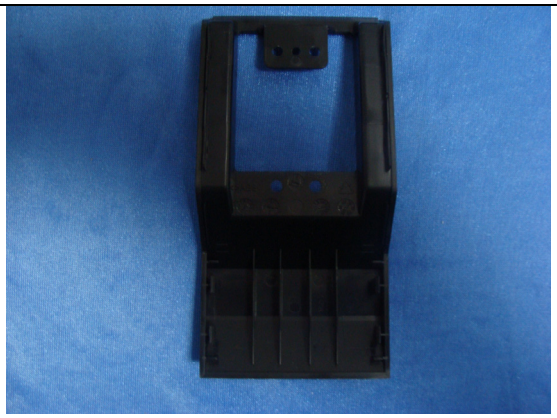	Stand Front	A34G0473 RX 1B0100
	Base	A34G0475 RX 1B0130
	Stand Rear	A34G0474 RX 1B0100

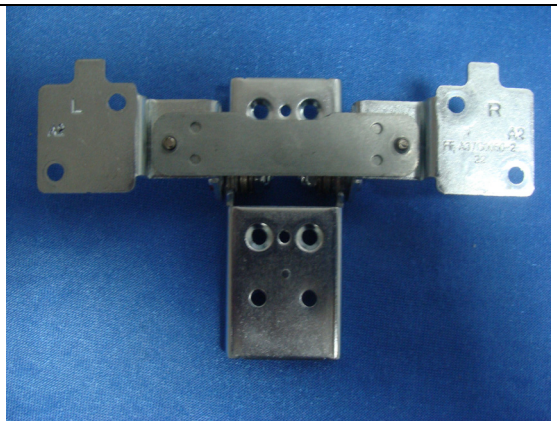	Hinge	A37G0050 4
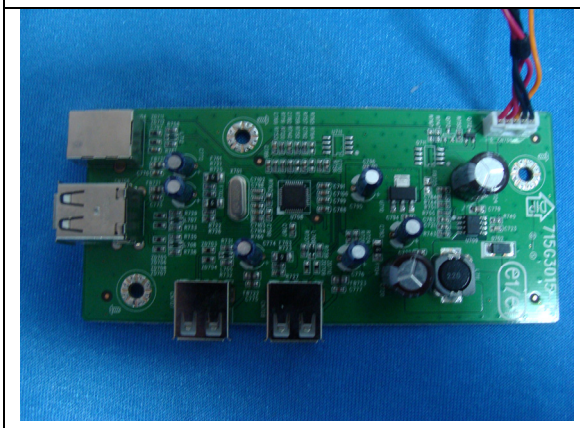	USB BOARD	USB7QK4

Main Board

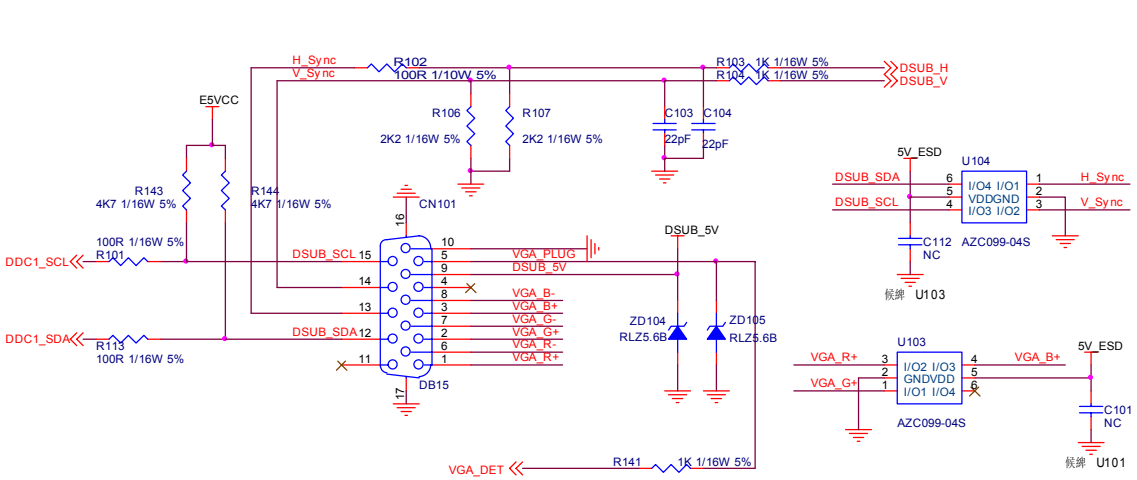

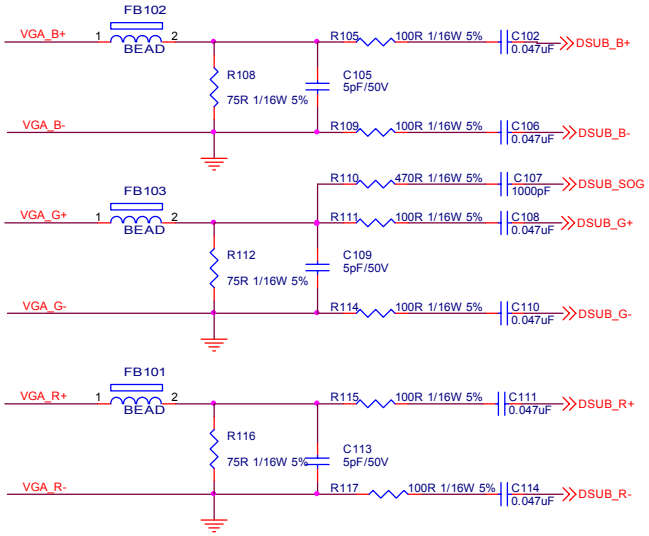

TPV (Top Victory Electronics Co., Ltd.)		OEM MODEL	Acer	Size	B
結隔瓜綢腹	G3108-1-X-X-17-081119	TPV MODEL		Rev	1
Key Component	2.0.Input	PCB NAME		称爹	<称爹>
Date	Wednesday, November 19, 2008	Sheet	2 of 5		

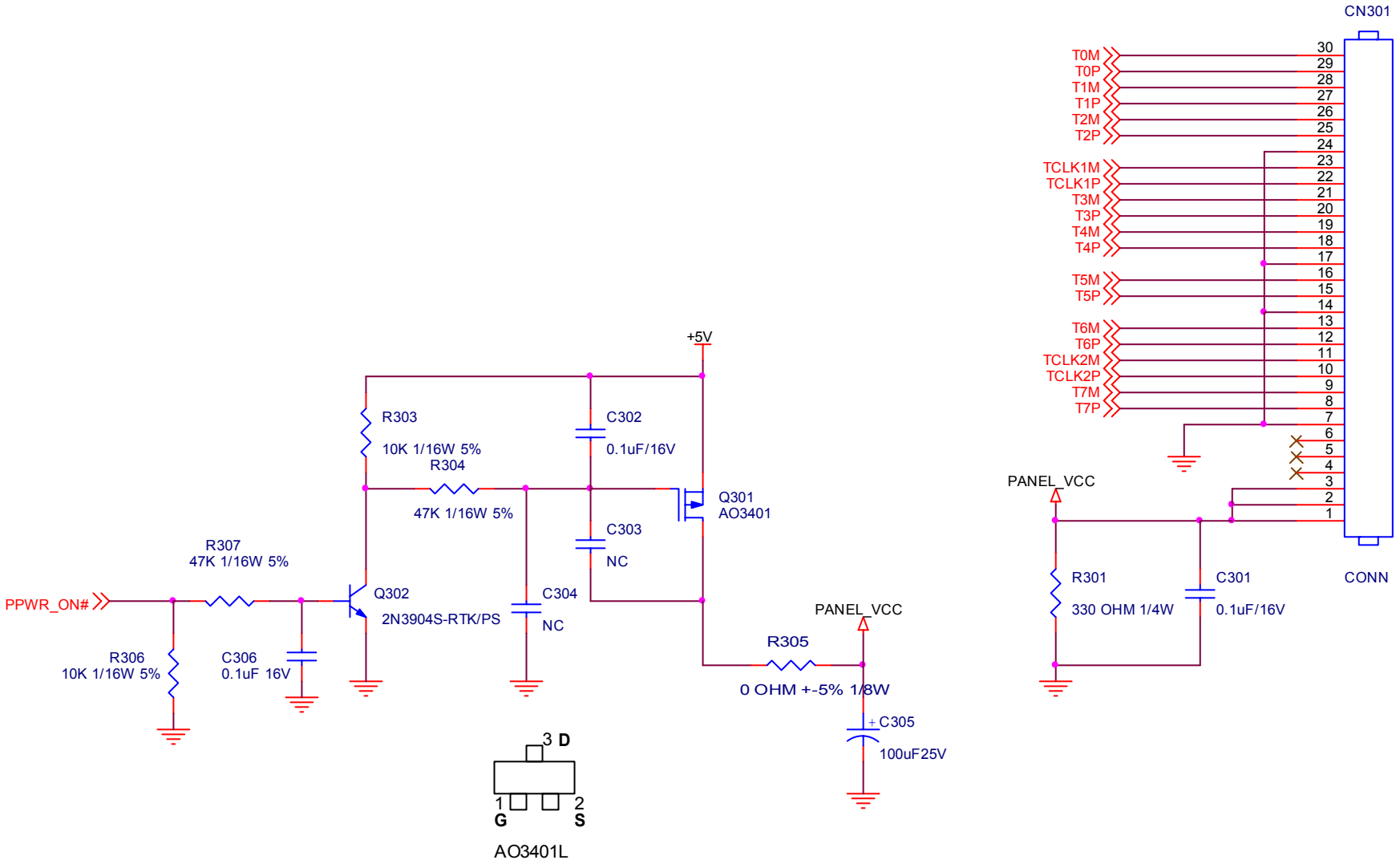

T P V （Top Victory Electronics Co . , Ltd. ）		OEM MODEL	Acer	Size	A
結 隔 瓜 綑 腹	G3108-1-X-X-17-081119	TPV MODEL		Rev	1
Key Component	3.0.OUTPUT	PCB NAME		称 爹	<称爹>
Date	Wednesday , Nov ember 19, 2008	Sheet	3 of 5		

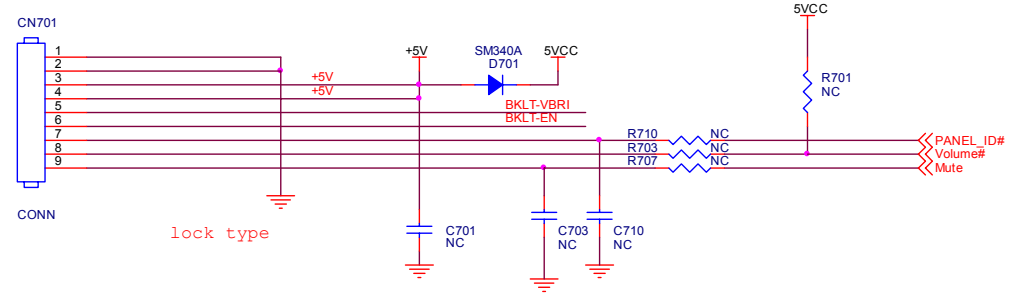

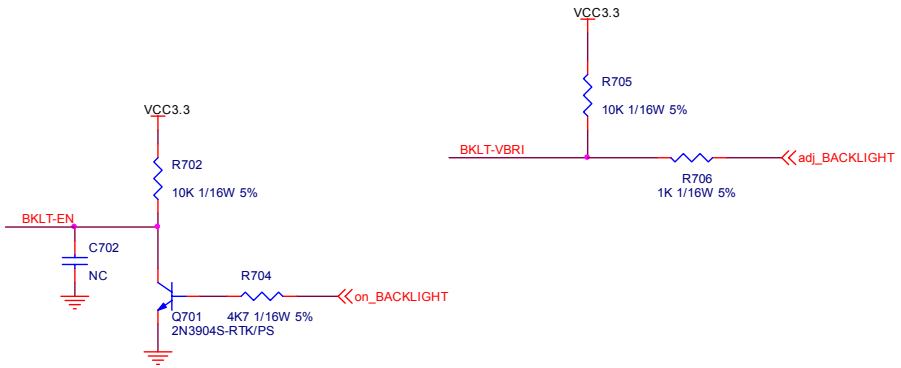

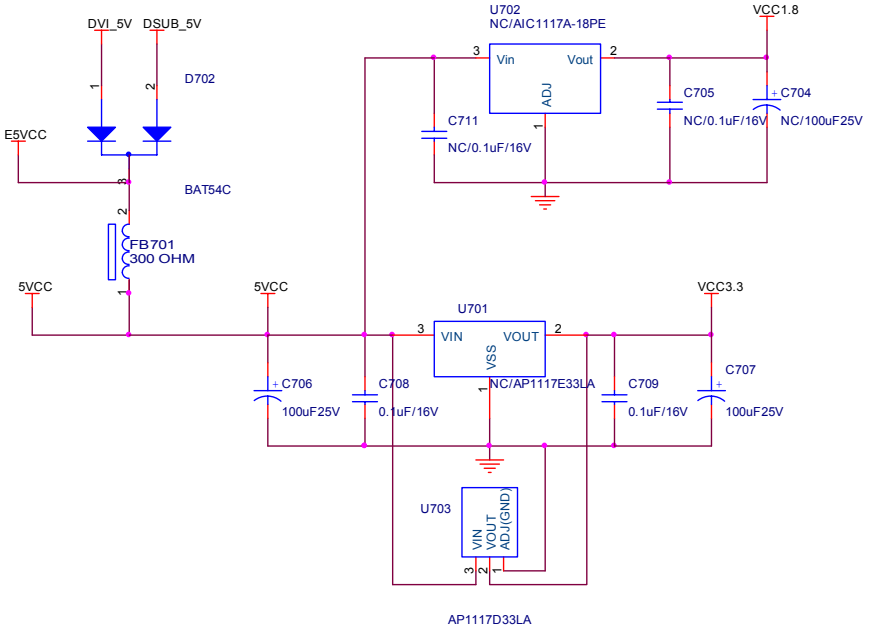

TPV (Top Victory Electronics Co., Ltd.)		OEM MODEL	Acer	Size	B
話 隔 瓜 錮 腹	G3108-1-X-X-17-081119	TPV MODEL		Rev	1
Key Component	4.0.POWER	PCB NAME		称 爹	<称爹>
Date	Wednesday, November 19, 2008	Sheet	4 of 5		

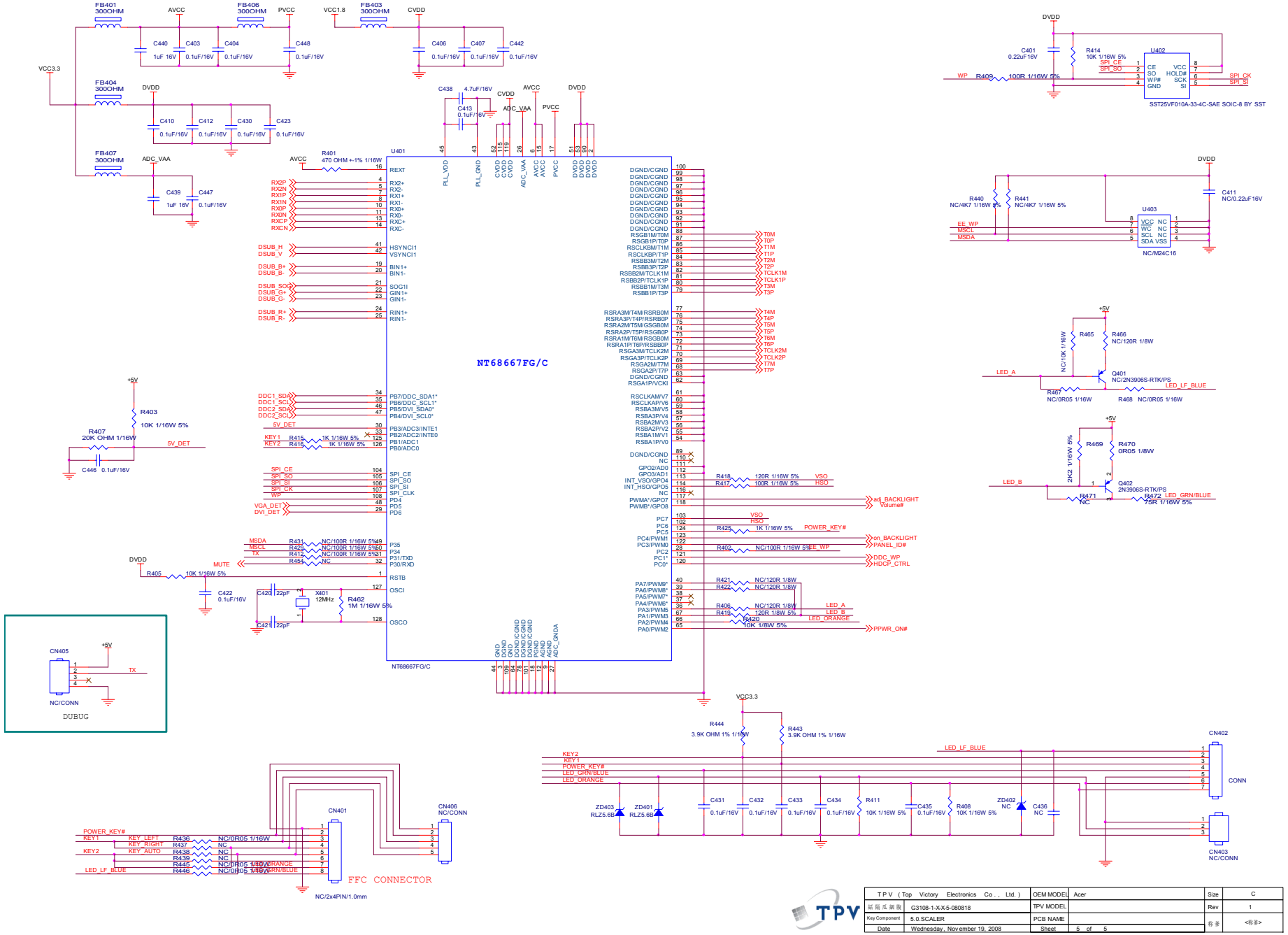
NT68667FG/C
U401
U402
U403
SST25VF010A-33-4C-SAE SOIC-8 BY SST
NC/M24C16
DUBUG
CN405
CN401
CN406
NC/CONN
FFC CONNECTOR
NC/2x4PIN/1.0mm
CN402
CN403
CONN
Q401
NC/2N3906S-RTK/PS
Q402
2N3906S-RTK/PS
X401
12MHz
FB401
300OHM
FB406
300OHM
FB403
300OHM
FB404
300OHM
FB407
300OHM
R401
470 OHM +-1% 1/16W
R403
10K 1/16W 5%
R407
20K OHM 1/16W
R405
10K 1/16W 5%
R462
1M 1/16W 5%
R409
100R 1/16W 5%
R414
10K 1/16W 5%
R440
NC/4K7 1/16W 5%
R441
NC/4K7 1/16W 5%
R465
NC/10K 1/16W
R466
NC/120R 1/8W
R467
NC/0R05 1/16W
R468
NC/0R05 1/16W
R469
2K2 1/16W 5%
R470
0R05 1/8W
R471
NC
R472
75R 1/16W 5%
R444
3.9K OHM 1% 1/16W
R443
3.9K OHM 1% 1/16W
R411
10K 1/16W 5%
R408
10K 1/16W 5%
R420
10K 1/8W 5%
R425
1K 1/16W 5%
R436
NC/0R05 1/16W
R437
NC
R438
NC
R439
NC
R445
NC/0R05 1/16W
R446
NC/0R05 1/16W
ZD403
RLZ5.6B
ZD401
RLZ5.6B
ZD402
NC
C431
0.1uF/16V
C432
0.1uF/16V
C433
0.1uF/16V
C434
0.1uF/16V
C435
0.1uF/16V
C436
NC
C401
0.22uF16V
C411
NC/0.22uF16V
C422
0.1uF/16V
C423
0.1uF/16V
C438
4.7uF/16V
C413
0.1uF/16V
C439
1uF 16V
C440
1uF 16V
C446
0.1uF/16V
C447
0.1uF/16V
C448
0.1uF/16V
C406
0.1uF/16V
C407
0.1uF/16V
C442
0.1uF/16V
C410
0.1uF/16V
C412
0.1uF/16V
C430
0.1uF/16V
C403
0.1uF/16V
C404
0.1uF/16V
C420
22pF
C421
22pF
VCC3.3
VCC1.8
DVDD
AVCC
PVCC
CVDD
ADC_VAA
+5V
TX
MUTE
5V_DET
LED_A
LED_B
LED_LF_BLUE
LED_GRN/BLUE
LED_ORANGE
POWER_KEY#
KEY1
KEY2
KEY_LEFT
KEY_RIGHT
KEY_AUTO
EE_WP
MSCL
MSDA
PPWR_ON#
adj_BACKLIGHT
Volume#
on_BACKLIGHT
PANEL_ID#
DDC_WP
HDCP_CTRL
VSO
HSO
TPV
TPV (Top Victory Electronics Co., Ltd.)
OEM MODEL
Acer
Size
C
TPV MODEL
Rev
1
G3108-1-X-X-5-080818
Key Component
5.0.SCALER
PCB NAME
Date
Wednesday, November 19, 2008
Sheet
5 of 5

Power board

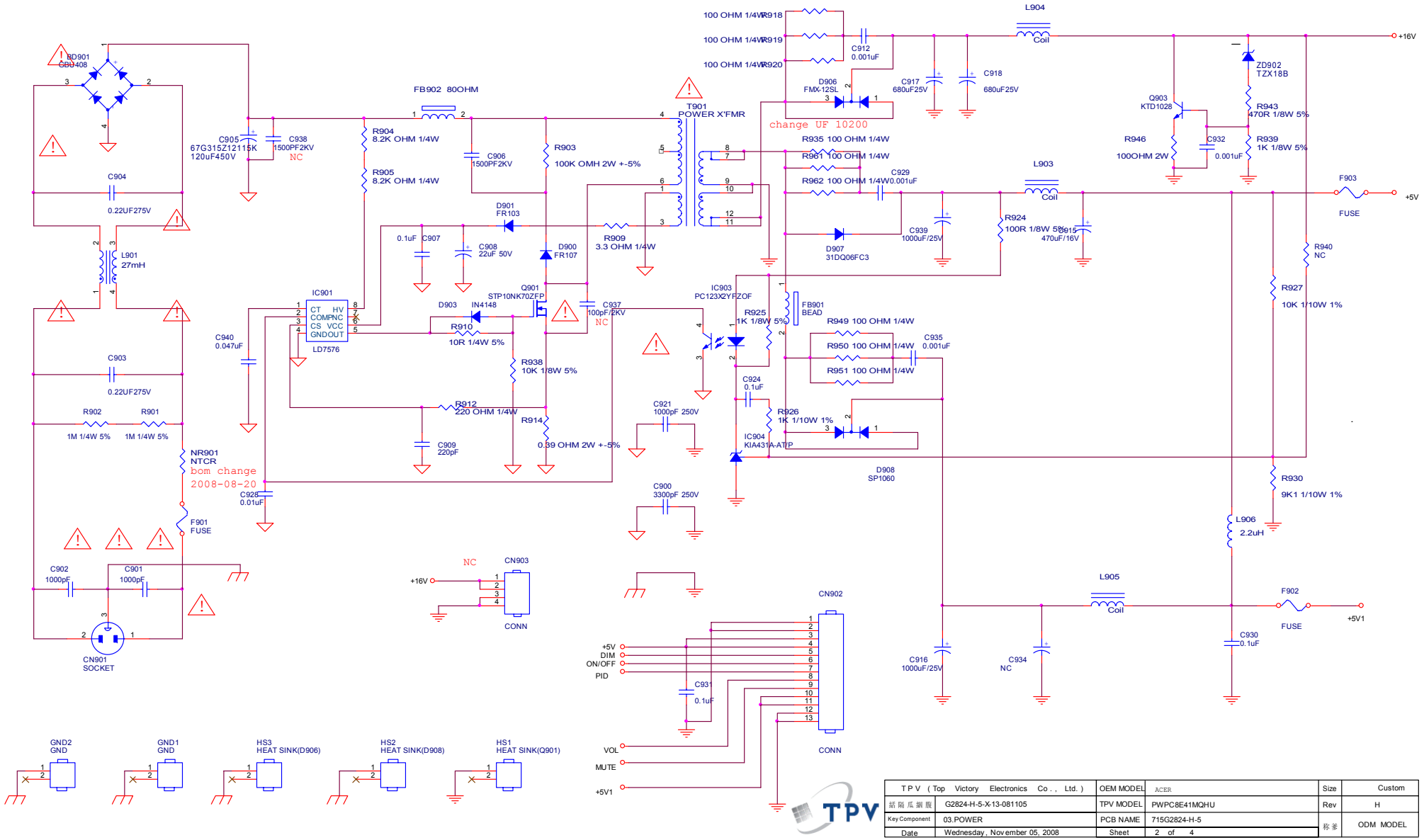

TPV (Top Victory Electronics Co., Ltd.)		OEM MODEL	ACER	Size	Custom
結構瓜鋼版	G2824-H-5-X-13-081105	TPV MODEL	PWPC8E41MQHU	Rev	H
Key Component	03.POWER	PCB NAME	715G2824-H-5	称爹	ODM MODEL
Date	Wednesday, November 05, 2008	Sheet	2 of 4		

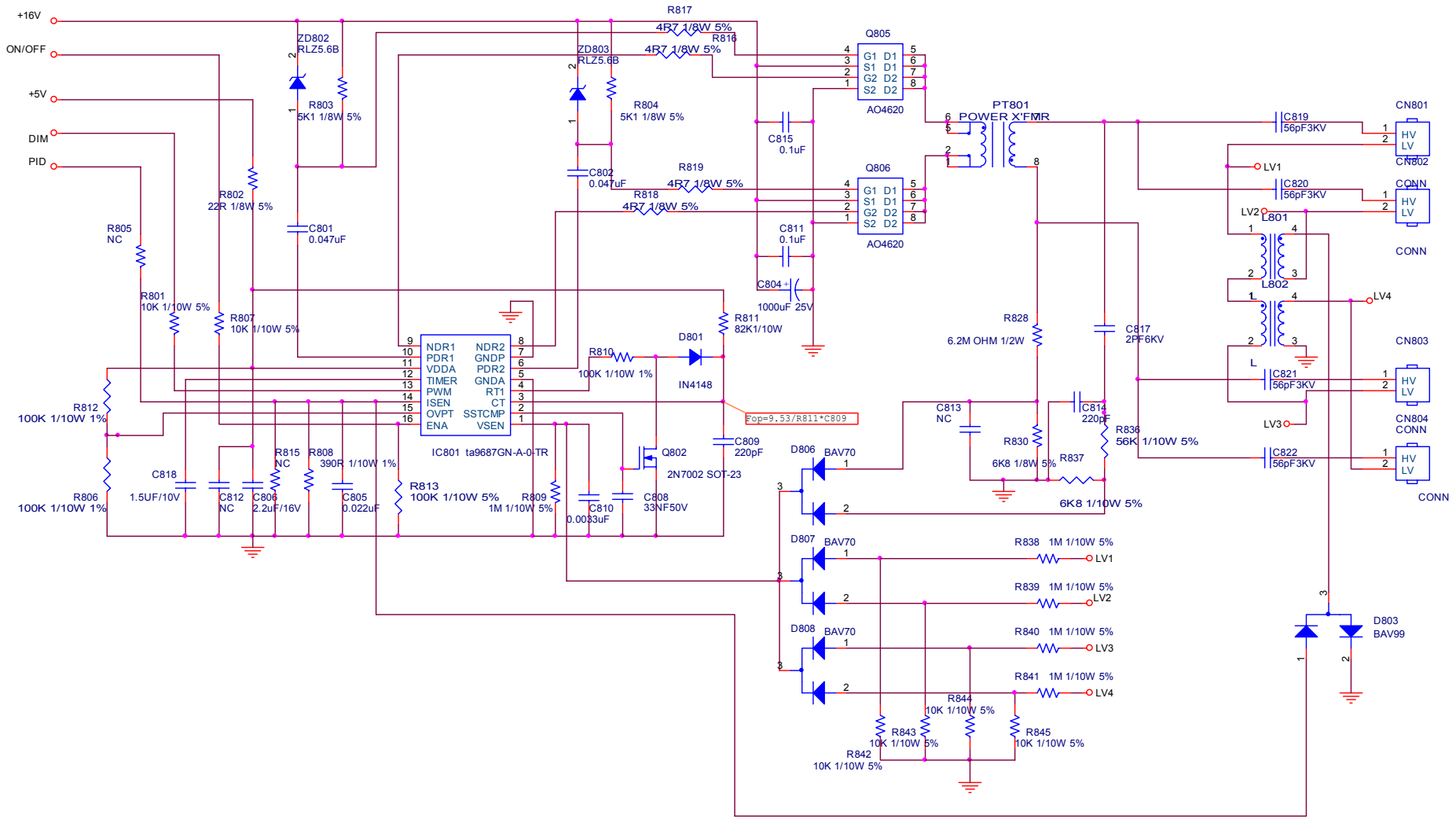

TPV (Top Victory Electronics Co., Ltd.)		OEM MODEL	ACER	Size	Custom
紙隔瓜綢腹	G2824-H-5-X-13-081105	TPV MODEL	PWPC8E41MQHU	Rev	H
Key Component	02.INVERTER	PCB NAME	715G2824-H-5	称爹	ODM MODEL
Date	Wednesday, November 05, 2008	Sheet	3 of 4		

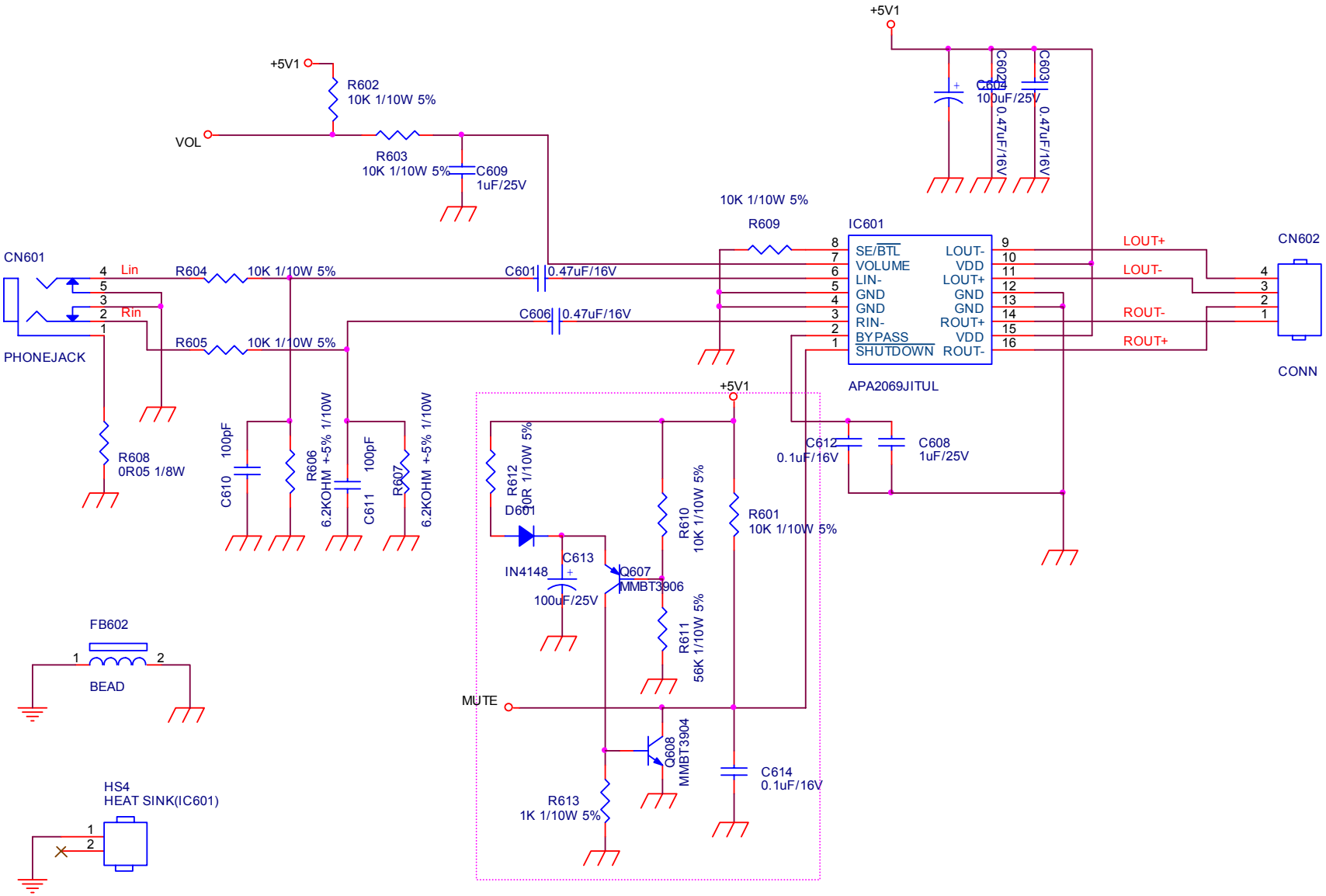

T P V (Top Victory Electronics Co . , Ltd.)		OEM MODEL	ACER	Size	Custom
結 隔 瓜 組 腹	G2824-H-5-X-13-081105	TPV MODEL	PWPC8E41MQHU	Rev	H
Key Component	04.AUDIO	PCB NAME	715G2824-H-5	称 爹	ODM MODEL
Date	Wednesday, November 05, 2008	Sheet	4 of 4		

Key board

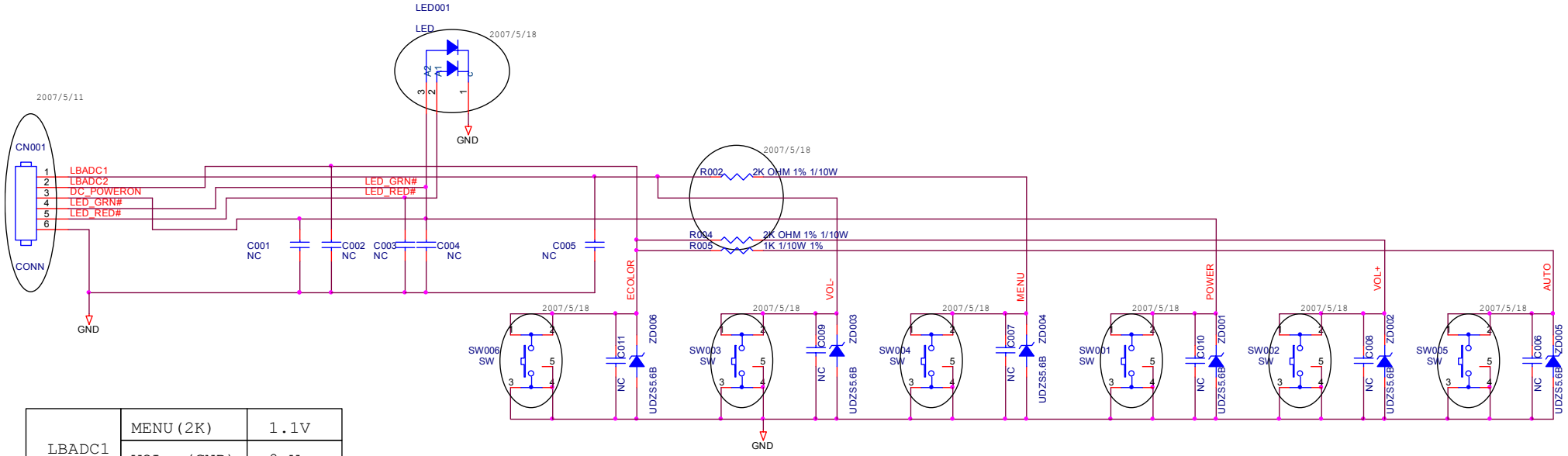

LBADC1	MENU (2K)	1.1V
	VOL- (GND)	0 V
LBADC2	VOL+ (2K)	1.1V
	AUTO (1K)	0.65V
	ECOLOR (GND)	0 V

change Net name
MENU--->AUTO
AUTO----MENU

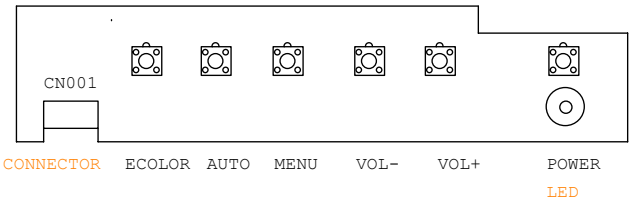

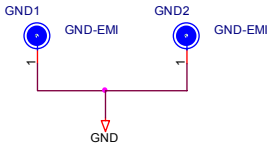

T P V (Top Victory Electronics Co., Ltd.)		OEM MODEL		Size	B
結 隔 瓜 網 腹	G2731-B-AC-X-1-070617	TPV MODEL	ACER	Rev	A
Key Component	02.Key Board	PCB NAME	715G2731-B-AC	称 爹	<称爹>
Date	Sunday, June 17, 2007	Sheet	1 of 2		

Usb board

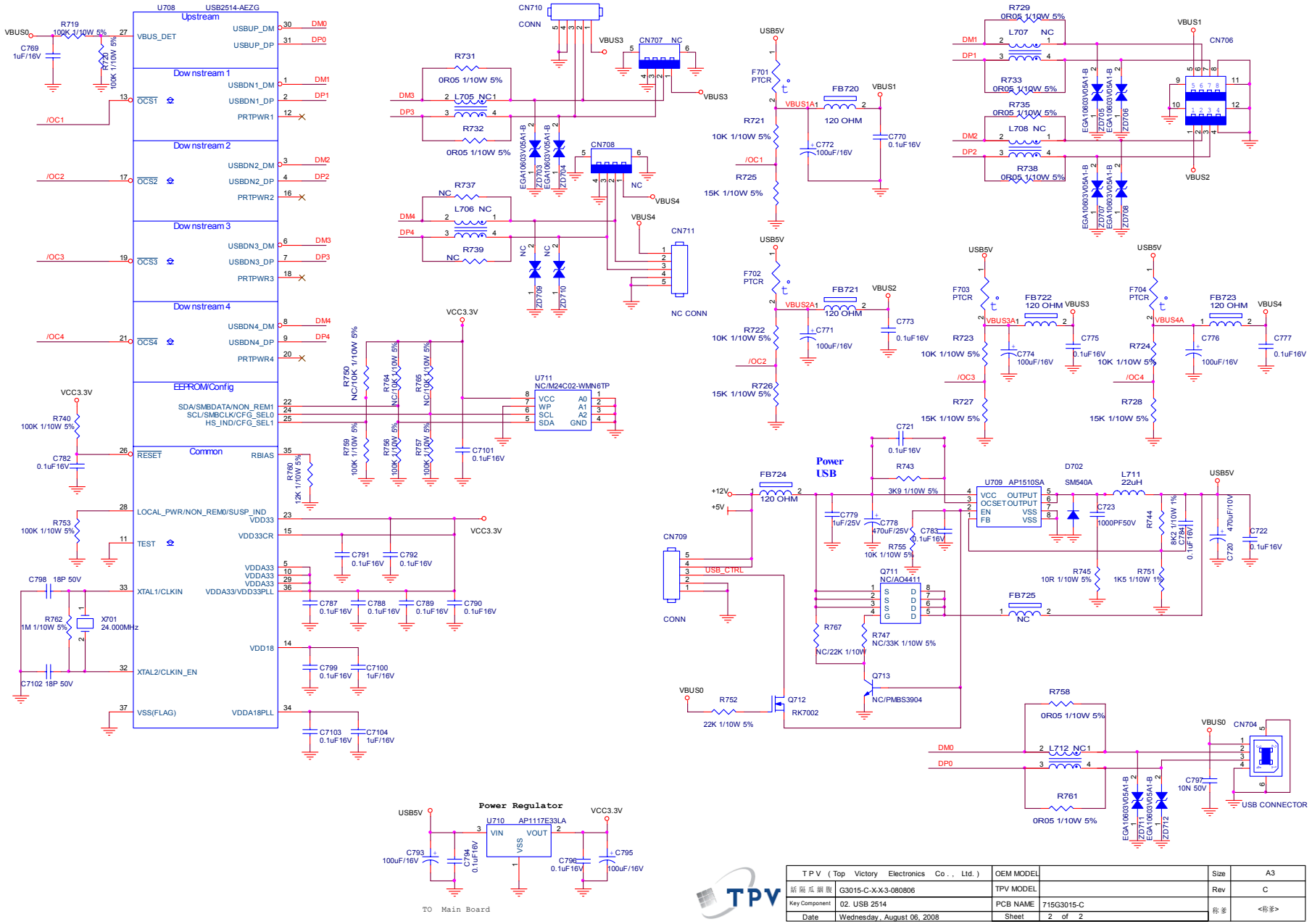

U708 USB2514-AEZG
Upstream
Downstream 1
Downstream 2
Downstream 3
Downstream 4
EEPROM/Config
Common
VBUS_DET
USBUP_DM
USBUP_DP
USBDN1_DM
USBDN1_DP
PRTPWR1
USBDN2_DM
USBDN2_DP
PRTPWR2
USBDN3_DM
USBDN3_DP
PRTPWR3
USBDN4_DM
USBDN4_DP
PRTPWR4
SDA/SMBDATA/NON_REM1
SCL/SMBCLK/CFG_SEL0
HS_IND/CFG_SEL1
RESET
RBIAS
LOCAL_PWR/NON_REM0/SUSP_IND
TEST
VDD33
VDD33CR
VDDA33
VDDA33/VDD33PLL
XTAL1/CLKIN
XTAL2/CLKIN_EN
VDD18
VSS(FLAG)
VDDA18PLL
U711 NC/M24C02-WMN6TP
VCC
WP
SCL
SDA
A0
A1
A2
GND
CN710 CONN
CN707 NC
CN708 NC
CN711 NC CONN
CN706
CN709 CONN
CN704 USB CONNECTOR
Power USB
U709 AP1510SA
VCC OUTPUT
OCSET OUTPUT
EN VSS
FB VSS
D702 SM540A
Q711 NC/AO4411
Q712 RK7002
Q713 NC/PMBS3904
Power Regulator
U710 AP1117E33LA
VIN VOUT
VSS
TO Main Board
TPV
T P V (Top Victory Electronics Co., Ltd.)
OEM MODEL
Size A3
G3015-C-X-X-3-080806
TPV MODEL
Rev C
Key Component 02. USB 2514
PCB NAME 715G3015-C
Date Wednesday, August 06, 2008
Sheet 2 of 2