Edifier

R351

Multimedia Desktop Theater

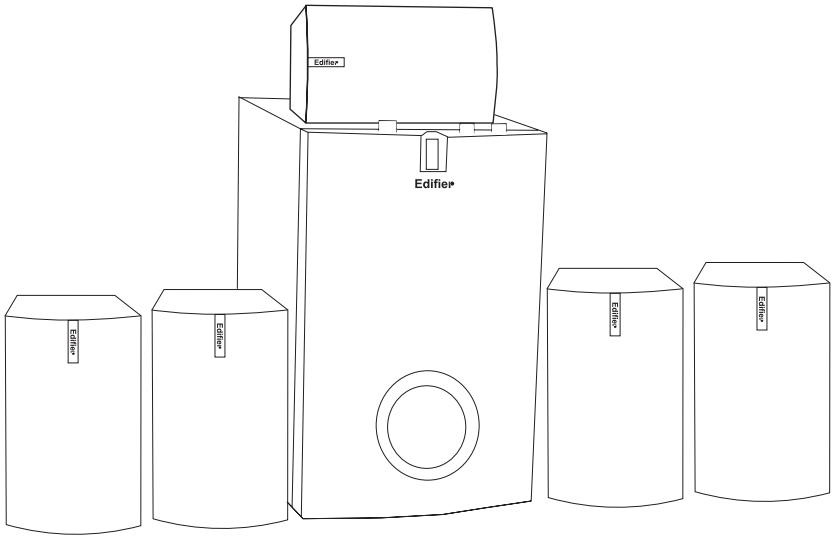

User's Manual

Edifier Enterprises Canada Inc.

Designed and Engineered in Canada

IMPORTANT SAFETY INFORMATION

The lightning flash with arrowhead, within an equilateral triangle, is intended to alert the user to the presence of Uninsulated "dangerous voltage" within the product's Enclosure that may be of sufficient magnitude to constitute a risk of electric shock to persons.

CAUTION
RISK OF ELECTRIC SHOCK DO NOT OPEN

CAUTION: TO PREVENT THE RISK OF ELECTRIC SHOCK, DO NOT REMOVE COVER (OR BACK). NO USER-SERVICEABLE PARTS INSIDE. REFER SERVICING TO QUALIFIED SERVICE PERSONNEL.

The exclamation point within an equilateral triangle is intended to alert the user to the presence of important operating and maintenance (servicing) instructions in the literature accompanying the Appliance.

SAFETY INSTRUCTIONS

- Read these instructions.
- Keep these instructions.
- Heed all warnings.
- Follow all instructions.
- Install in accordance with the manufacturer's Instructions.
- Do not use the speakers near water, and do not immerse them in any liquid or pour any liquid on them.
- Do not block the openings in the speaker cabinets, never push objects into speaker vents or slots because of fire or electric shock hazards, and provide sufficient space around the speakers for proper ventilation.
- Do not install near any heat sources such as radiators, heat registers, stoves, or other apparatus (including amplifiers) that produce heat.
- Do not defeat the safety purpose of the polarized plug. A polarized plug has two blades with one wider than the other. The wide blade is provided for your safety. If the provided plug does not fit into your outlet, consult an electrician for replacement of the obsolete outlet.
- Protect the power cord from being walked on or pinched particularly at plugs, convenience receptacles, and the point where they exit from the apparatus.
- For added protection during lightning storms, unplug the speakers from the electrical outlet and turn off the Computer.
- Unplug this apparatus when unused for long periods of time.
- Water and moisture ----Do not use the speakers near water, and do not immerse them in any liquid or pour any liquid on them.
- Heat---- Place the speakers away from all heat sources.
- Ventilation ---- Do not block the openings in the speaker cabinets, never push objects into speaker Vents or slots because of fire or electric shock Hazards, and provide sufficient space around the Speakers for proper ventilation.
- Location ---- Place the speakers in a stable location so they will not fall causing damage to the speakers or bodily harm.
- Cleaning ---- Unplug the speakers from the computer and from the electrical outlet before cleaning them with a damp cloth.
- Lightning ----For added protection during lightning storms, unplug the speakers from the electrical outlet And turn off the computer.
- Servicing is required when the apparatus has been Damaged in any way, such as power-supply cord or plug is damaged, liquid has been spilled or objects have Fallen into the apparatus, the apparatus has been exposed to rain or moisture, does not operate normally, or has been dropped. Refer all servicing to qualified service personnel.
- Please adjust the audio to proper volume to avoid damaging your health and the system.

WARNING:
TO REDUCE THE RISK OF ELECTRIC SHOCK, DO NOT EXPOSE THIS APPARATUS TO RAIN OR MOISTURE.

One Year Limited Warranty

Edifier warrants to the end user that all of its computer speaker systems are free from defects in material and workmanship in the course of normal and reasonable use for a term of one year from the date of purchase.
This warranty is the exclusive and only warranty in effect relative to Edifier multimedia speaker systems and any other warranties, either expressed or implied, are invalid. Neither Edifier nor any authorized Edifier reseller is responsible for any incidental damages incurred in the use of the speakers. (This limitation of incidental or consequential damage is not applicable where prohibited.)
Edifier obligation under this warranty does not apply to any defect, malfunction or failure as a result of misuse, abuse, improper installation, use with faulty or improper equipment or the use of the speaker systems with any equipment for which they were not intended.
The terms of this warranty apply only to speaker systems when such speakers are returned to the respective authorized Edifier reseller where they were purchased.
Under the terms of this warranty the original consumer purchaser has certain legal rights and may have other rights which vary worldwide.

Copyright 2002
All Rights Reserved.
Manual Edition 1.0, Mar 2002
Printed in CHINA

Welcome !

Very thanks for choosing Edifier multimedia speaker,it can provide good sound for multimedia Computer and home theater. Before operating the system, please read this manual thoroughly and retain it for future reference.

Notice

Edifier and Edifier logo are owned by Edifier Enterprises Canada Inc. and may be registered. And other brand names and trademarks are the property of their owners. Edifier assumes no responsibility for any errors that may appear in this manual. Information contained herein is subject to change without notice.

Introduction:

- Completely MDF wooden case.
- 6″Long-throw subwoofer driver.
- 3″Full range satellite speaker.
- Key main volume controller on satellite speaker.
- Bass and rear volume controllers.
- Blue power indicate.
- Magnetically shield speakers.

Open the packing

Please check the speaker pattern marked on the package, Please contact the seller as soon as if you find the speaker is not the pattern you want.

R351 packing list:

- ☑ 1 x subwoofer
- ☑ 5 x satellites
- ☑ 3 x 3.5 stero /3.5 stero audio connecting
- ☑ 1 x User's Manual

Overview

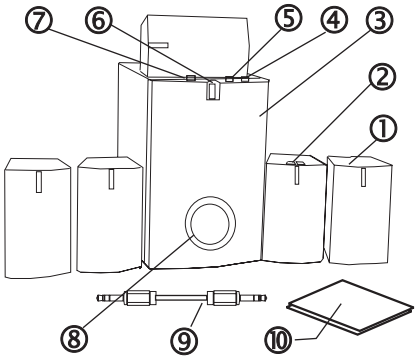

1.Satellite(Front and Right)
2.Key-press
3. Subwoofer
4. Knob of super volume
5. Knob of surround volume
6. Indicator of power
7. Power switch
8. Inverse-phase hole
9. Audio connecting cord
10.User's Manual

Introduction of back panel

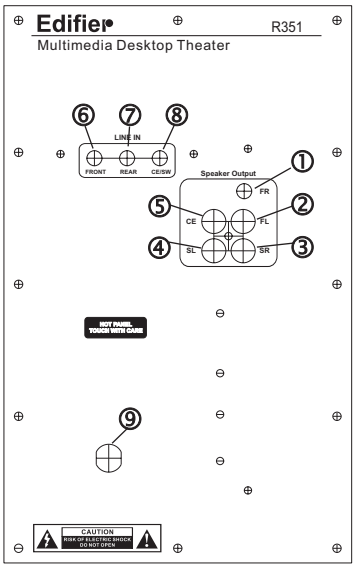

1、Output of right & front
2、Output of left & front
3、Output of right & surround
4、Output of left & surround
5、Output of centre
6、Input of front
7、Input of surround
8、Input of centre/subwoofer
9、Power Cord

📖 CONNECTING

1、CONNECTING

Connect the satellite speakers to the output splints on the back panel of the Sub-woofer. Please note to match the color, the red-color-coded cable should be connected into the red connector.

2、Connect the subwoofer to the Audio device.

Using Audio connecting cord , connect the Line-input port of the subwoofer to Line-out of the Audio Device (Such as the computer, Discman, etc)

3、Playing the audio device

Plug the AC power plug into the wall outlet and turn on the power switch, Now your speaker system is ready for Use. Adjusting the volume control and the Super bass,then you can enjoy the music.

📖 SPECIFICATIONS:

Total Power Output:	RMS 6W x 5 + 20W
Input Impedance:	20K Ohm
Input Sensitive:	450 mV
Bass Unit:	6″ Aluminum coil, 8 Ohm
Tweeter Unit:	3″ Paper coil, 4 Ohm
Frequency Response:	45 Hz ~ 20 KHz
Dimension(Subwoofer):	181(W) x 286(H) x 349(D)mm
Dimension(Satellite):	93(W) x 154(H) x 99(D)mm
Gross Weight:	About 9.8 Kg

📖 TROUBLESHOOTING

- **No sound:**
  - **Power, input, speaker cables and connectors all attached and seated?**
  - **Soundcard properly installed and functioning?**
  - **Appropriate software properly installed and operating?**
  - **Computer's sound (control panel) volume turned up?**
- **One or more speakers have no or low sound level:**
  - **Cables all connected properly?**
  - **Connectors fully seated in soundcard, speakers or Y-adapter (for two-channel cards)?**
  - **Main and subwoofer level controls properly adjusted on Control Pod?**
  - **Computer software settings adjust for proper use?**
  - **Computer system's sound (control panel) volume turned up?**
- **Distortion or buzzing quality to total sound or subwoofer:**
  - **Turn down computer's sound (control panel) volume, and increase Control Pod volume.**
  - **Turn down Subwoofer volume, as program signal may be too strong.**
- **Noise or hiss; signal not loud enough with Main Volume turned up :**
  - **Turn up computer's sound (control panel) volume.**
  - **Turn down Main Volume on control Pod to compensate.**
  - **Appropriate software or hardware installed and operating?**
  - **Is this sound part of the program material being played?**
  - **Is software adjusted and set properly?**
- **Computer Video Monitor Interference:**
  - **Is this Subwoofer too close to the computer monitor? Try 10 distance.**
  - **Are one or both of the satellite speakers too close to the computer monitor?**

Edifier