SEARS

OWNER'S MANUAL

MODEL NO.
917.299642

Caution:
Read and follow all Safety Rules and Instructions Before Operating This Equipment

CRAFTSMAN

4.0 HORSEPOWER
14 INCH TINE WIDTH
COUNTER ROTATING TINES
REAR TINE TILLER

Assembly
Operation
Maintenance
Service and Adjustment
Repair Parts

Sears, Roebuck and Co., Chicago, IL 60684 U.S.A.

SAFETY RULES

Safe Operation Practices for Walk-Behind Powered Rotary Tillers

TRAINING

- Read the operating and service instruction manual carefully. Be thoroughly familiar with the controls and the proper use of the equipment. Know how to stop the unit and disengage the controls quickly.
- Never allow children to operate the equipment. Never allow adults to operate the equipment without proper instruction.
- Keep the area of operation clear of all persons, particularly small children, and pets.

PREPARATION

- Thoroughly inspect the area where the equipment is to be used and remove all foreign objects.
- Disengage all clutches and shift into neutral before starting the engine (motor).
- Do not operate the equipment without wearing adequate outer garments. Wear footwear that will improve footing on slippery surfaces.
- Handle fuel with care; it is highly flammable.
  - Use an approved fuel container.
  - Never add fuel to a running engine or hot engine.
  - Fill fuel tank outdoors with extreme care. Never fill fuel tank indoors.
  - Replace gasoline cap securely and clean up spilled fuel before restarting.
- Use extension cords and receptacles as specified by the manufacturer for all units with electric drive motors or electric starting motors.
- Never attempt to make any adjustments while the engine (motor) is running (except where specifically recommended by manufacturer).

OPERATION

- Do not put hands or feet near or under rotating parts.
- Exercise extreme caution when operating on or crossing gravel drives, walks, or roads. Stay alert for hidden hazards or traffic. Do not carry passengers.
- After striking a foreign object, stop the engine (motor), remove the wire from the spark plug, thoroughly inspect the tiller for any damage, and repair the damage before restarting and operating the tiller.
- Exercise caution to avoid slipping or falling.
- If the unit should start to vibrate abnormally, stop the engine (motor) and check immediately for the cause. Vibration is generally a warning of trouble.
- Stop the engine (motor) when leaving the operating position, before unclogging the tines, and when making any repair, adjustments, and inspections.
- Take all possible precautions when leaving the machine unattended. Disengage the power take-off, lower the attachment, shift into neutral, stop the engine, and remove the key.
- Before cleaning, repairing, or inspecting, shut off the engine and make certain all moving parts have stopped. Disconnect the spark plug wire, and keep the wire away from the plug to prevent accidental starting. Disconnect the cord on electric motors.
- Do not run the engine indoors; exhaust fumes are dangerous.
- Never operate the tiller without proper guards, plates, or other safety protective devices in place.
- Keep children and pets away.
- Do not overload the machine capacity by attempting to till too deep at too fast a rate.
- Never allow bystanders near the unit.
- Use only attachments and accessories approved by the manufacturer of the tiller (such as wheel weights, counterweights, cabs, and the like).
- Never operate the tiller without good visibility or light.
- Be careful when tilling in hard ground. The tines may catch in the ground and propel the tiller forward. If this occurs, let go of the handlebars and do not restrain the machine.

MAINTENANCE AND STORAGE

- Keep machine, attachments, and accessories in safe working condition.
- Check shear bolts, engine mounting bolts, and other bolts at frequent intervals for proper tightness to be sure the equipment is in safe working condition.
- Never store the machine with fuel in the fuel tank inside a building where ignition sources are present, such as hot water and space heaters, clothes dryers, and the like. Allow the engine to cool before storing in any enclosure.
- Always refer to the Owner's Manual instructions for important details if the tiller is to be stored for an extended period.

-IMPORTANT -

Warnings, Cautions, and Notes are a means of attracting attention to important or critical information in this manual.

LOOK FOR THIS SYMBOL TO POINT OUT IMPORTANT SAFETY PRECAUTIONS. IT MEANS -- ATTENTION! BECOME ALERT! YOUR SAFETY IS INVOLVED.

CAUTION: USED TO ALERT YOU THAT THERE IS A POSSIBILITY OF DAMAGING THIS EQUIPMENT.

NOTE: Gives essential information that will aid you to better understand, incorporate, or execute a particular set of instructions.

CONGRATULATIONS on your purchase of a Sears Craftsman Tiller. It has been designed, engineered and manufactured to give you the best possible dependability and performance.

Should you experience any problems you cannot easily remedy, please contact your nearest Sears Service Center/Department. We have competent, well trained technicians and the proper tools to service or repair this unit.

Please read and retain this manual. The instructions will enable you to assemble and maintain your Tiller properly. Always observe the "SAFETY RULES".

MODEL NUMBER 917.299642

SERIAL NUMBER _____

DATE OF PURCHASE _____

THE MODEL AND SERIAL NUMBERS WILL BE FOUND ON THE MODEL PLATE ATTACHED TO THE TOP OF THE TRANSMISSION.

YOU SHOULD RECORD BOTH SERIAL NUMBER AND DATE OF PURCHASE AND KEEP IN A SAFE PLACE FOR FUTURE REFERENCE.

PRODUCT SPECIFICATIONS

HORSEPOWER:	4.0
DISPLACEMENT:	11.39 CU. IN.
GASOLINE CAPACITY:	2 QUART (UNLEADED)
OIL (20 OZ. CAPACITY):	SAE 30W (SAE 10W 30)
SPARK PLUG (GAP .030 IN.):	CHAMPION RCJ8

MAINTENANCE AGREEMENT

A Sears Maintenance Agreement is available on this product. Contact your nearest Sears store for details.

CUSTOMER RESPONSIBILITIES

- Read and observe the safety rules.
- Follow a regular schedule in maintaining, caring for and using your Tiller.
- Follow the instructions under "Maintenance" and "Storage" sections of this Owner's Manual.

LIMITED ONE YEAR LIMITED WARRANTY ON CRAFTSMAN TILLER

For one year from date of purchase, when this Craftsman Tiller is maintained, lubricated, and tuned up according to the instructions in the owner's manual, Sears will repair, free of charge, any defect in material and workmanship.

If this Craftsman Tiller is used for commercial or rental purposes, this Warranty applies for only 30 days from the date of purchase.

This Warranty does not cover:

- expendable items which become worn during normal use, such as tines, spark plug, air cleaners and belts.
- Repairs necessary because of operator abuse or negligence, including bent crankshafts and the failure to maintain the equipment according to the instructions contained in the owner's manual.

WARRANTY SERVICE IS AVAILABLE BY RETURNING THE CRAFTSMAN TILLER TO THE NEAREST SEARS SERVICE CENTER/DEPARTMENT IN THE UNITED STATES. THIS WARRANTY APPLIES ONLY WHILE THIS PRODUCT IS IN USE IN THE UNITED STATES.

This Warranty gives you specific legal rights, and you may also have other rights which vary from state to state.

Sears, Roebuck and Co., D/731CR-W, Sears Tower, Chicago, IL 60684

-NOTE-

This unit is equipped with an internal combustion engine and should not be used on or near any unimproved forest-covered, brush-covered or grass covered land unless the engine's exhaust system is equipped with a spark arrester meeting applicable local or state laws (if any). If a spark arrester is used, it should be maintained in effective working order by the operator.

In the state of California the above is required by law (Section 4442 of the California Public Resources Code). Other states may have similar laws. Federal laws apply on federal lands. See your Sears Authorized Service Center for spark arrester. Refer to page 33 of Repair Parts section of this manual for part number.

TABLE OF CONTENTS

INDEX

TILLER ACCESSORIES

THESE ACCESSORIES WERE AVAILABLE WHEN THE TILLER WAS PURCHASED. THEY ARE ALSO AVAILABLE AT MOST SEARS RETAIL OUTLETS, CATALOG AND SERVICE CENTERS. MOST SEARS STORES CAN ORDER REPAIR PARTS FOR YOU, WHEN YOU PROVIDE THE MODEL NUMBER OF YOUR TILLER.

ENGINE

SPARK PLUG	MUFFLER	AIR FILTER	GAS CAN	ENGINE OIL	STABILIZER
			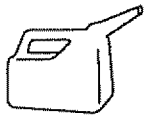	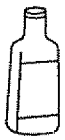	

TILLER PERFORMANCE

FURROW OPENER
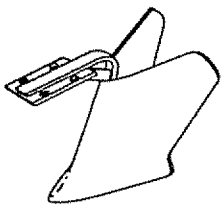

TILLER MAINTENANCE

BELT	TINES	RETAINING PIN	HAIRPIN CLIP
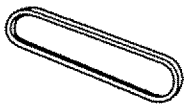		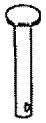	

ASSEMBLY

TO ASSEMBLE YOUR TILLER YOU WILL NEED:

(1) utility knife
(1) wire cutter
(1) tire pressure gauge
(1) pair of pliers
(1) screwdriver
(1) 9/16" wrench
(1) ratchet
(1) socket extension
(1) 9/16" socket

OPERATOR'S POSITION

The right hand (R.H.) and left hand (L.H.) sides of your Tiller are determined from the Operator's Position while standing behind Tiller.

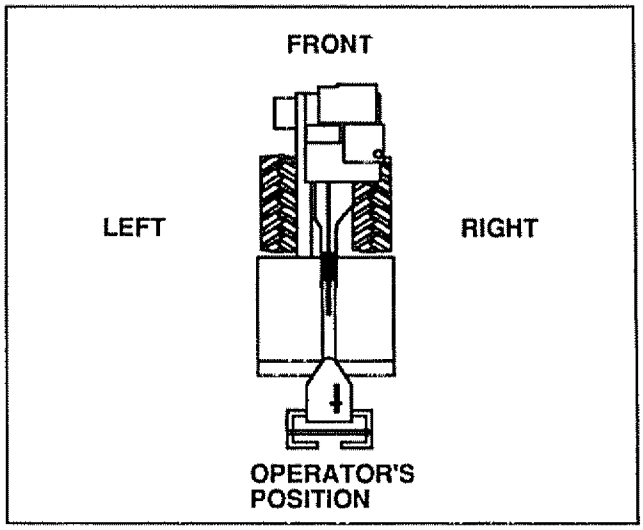

FIGURE 1

YOUR BAG OF PARTS WILL CONSIST OF THE FOLLOWING:

(1) Owner's Manual

(2) Hairpin Clips

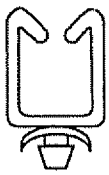

(1) Cable Clip

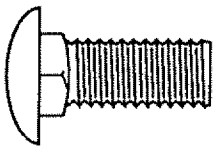

(2) Carriage Bolts 3/8 - 16 UNC x 1 Gr. 5

(2) Center Locknuts 3/8 x 16 UNC

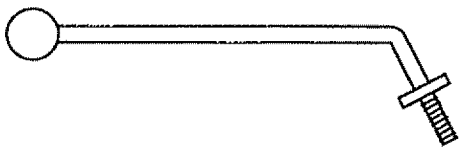

(1) Handle Lock Lever

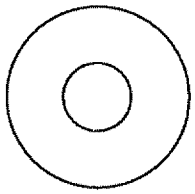

(1) Flat Washer 13/32 x 1 x 11 Ga.

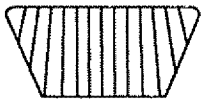

(2) Handle Locks

ASSEMBLY

UNPACKING CARTON

BE CAREFUL OF EXPOSED STAPLES WHEN HANDLING OR DISPOSING OF CARTONING MATERIAL.

CAUTION: WHEN UNPACKING AND ASSEMBLING TILLER, BE CAREFUL NOT TO STRETCH OR KINK CABLES.

- While holding Handle Assembly, cut Cable Ties securing Handle Assembly to Top Frame and Depth Stake. Let Handle Assembly rest on Tiller.
- Remove Top Frame of Carton.
- Slowly ease Handle Assembly up and place upside down on top of Carton (Fig. 2).

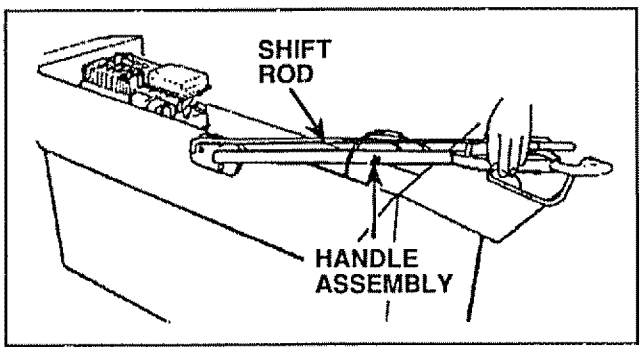

FIGURE 2

- Cut down right hand front and right hand rear corners of Carton, lay side carton wall down.
- Remove packing material from Handle Assembly.
- Separate Shift Rod from Handle Assembly.

INSTALL HANDLE

- Insert one Handle Lock (with teeth facing OUTWARD) in Gearcase Notch (Fig. 3). (Apply grease on smooth side of Handle Lock to aid in keeping Lock in place until Handle is lowered into position).

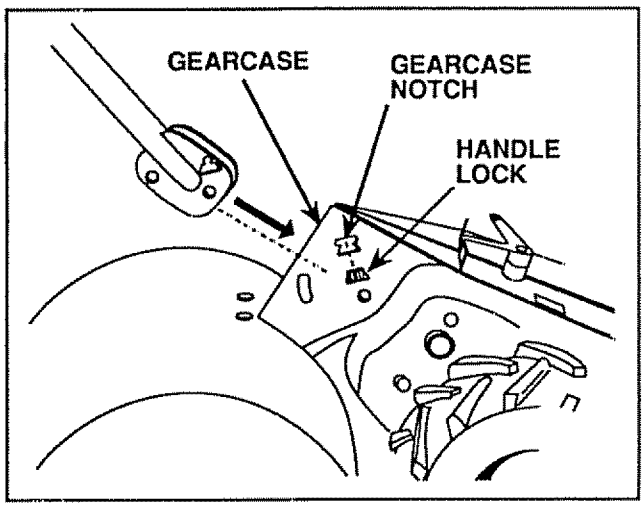

FIGURE 3

- Grasp Handle Assembly. Hold in "UP" position (Fig. 4). Be sure Handle Lock remains in Gearcase Notch. Slide Handle Assembly onto Gearcase.

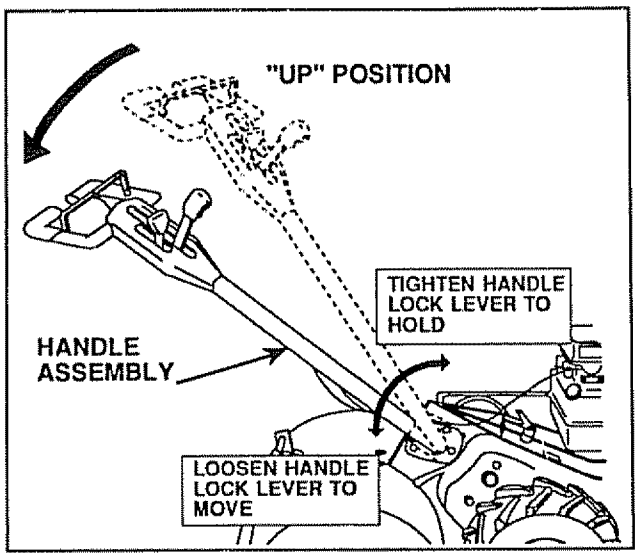

FIGURE 4

- Rotate Handle Assembly down to install two Carriage Bolts and Lock Nuts. Insert rear Carriage Bolt (Fig. 5) first, with head of Bolt on L.H. side of Tiller. Lower the Handle Assembly. Tighten Bolts so Handle moves with some resistance.
- Insert second Handle Lock (with teeth INWARD) in the slot of the Handle Base (Fig. 5).
- Place Flat Washer on threaded end of Handle Lock Lever.
- Insert Handle Lock Lever through Handle Base and Gearcase.
- With Handle Assembly in lowest position, securely tighten Handle Lock Lever by rotating clockwise (↷). Leaving Handle Assembly in lowest position will make it easier to remove Tiller from Carton.

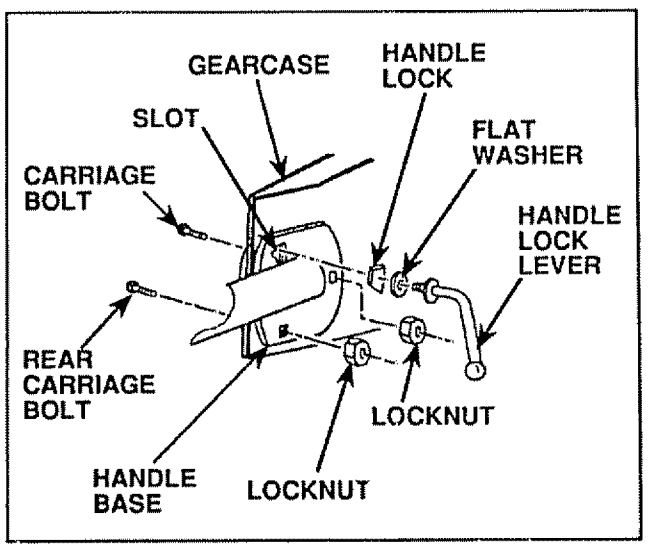

FIGURE 5

CONNECT SHIFT ROD

- Insert one end of Shift Rod (Fig. 6) into hole of Shift Lever Indicator.
- Swing Shift Rod to the right side of Tiller and insert one of two Hairpin Clips through hole of Shift Rod.

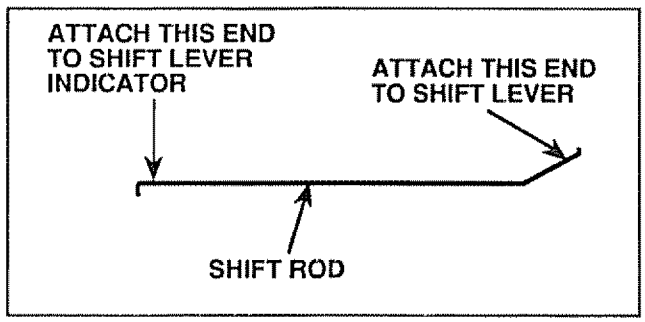

FIGURE 6

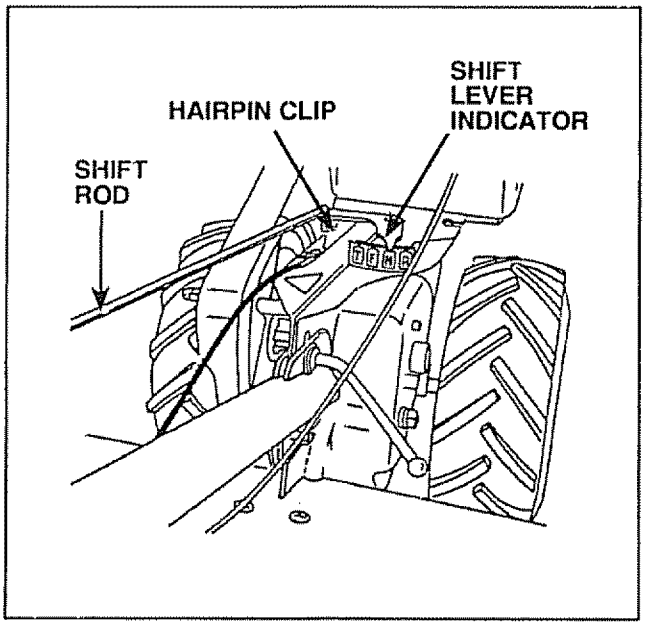

FIGURE 7

- Insert other end of Shift Rod into hole in Shift Lever (Fig. 8).
- Insert second Hairpin Clip through hole of Shift Rod.

REMOVE TILLER FROM CRATE

- Make sure Shift Lever Indicator (Fig. 7) is in "N" position.
- Tilt Tiller forward by lifting Handle. Separate cardboard cover from leveling shield.
- Rotate Tiller Handle to the right and pull Tiller out of Carton.

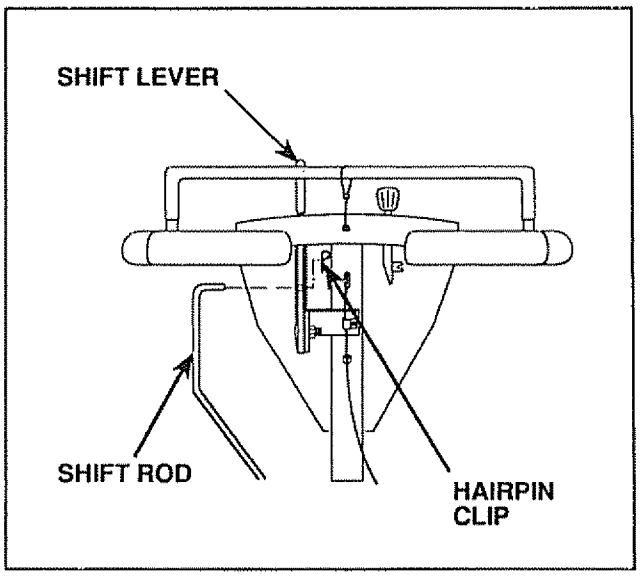

FIGURE 8

TIRE PRESSURE

Reduce Tire pressure to 20 PSI (Tires were overinflated for shipping purposes). If Tire pressures are not equal, Tiller will pull to one side.

CABLE CLIP

Insert Plastic Cable Clip into hole on the back of Handle Column. Push Cables into Clip (Fig. 9).

ADJUSTMENTS

Refer to Service and Adjustments Section (page 17) to adjust Handle height.

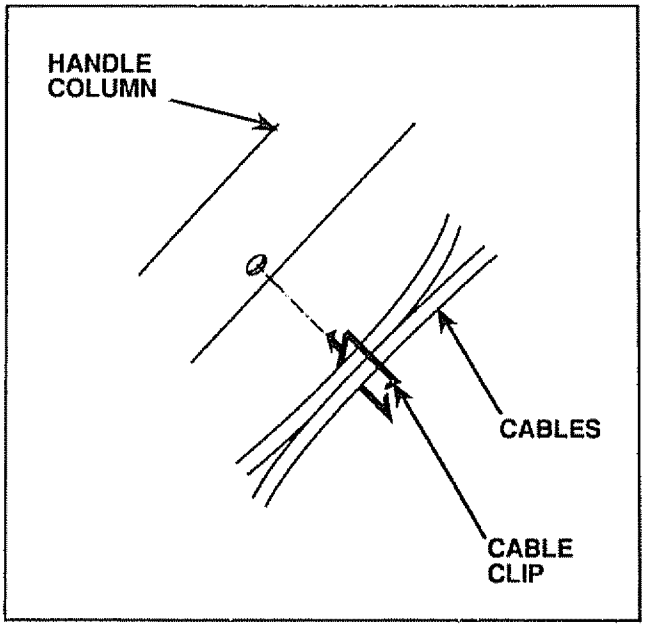

FIGURE 9

OPERATION

KNOW YOUR TILLER

READ THIS OWNER'S MANUAL AND SAFETY RULES BEFORE OPERATING YOUR TILLER.

Compare the illustrations with your Tiller to familiarize yourself with the location of various controls and adjustments. Save this manual for future reference.

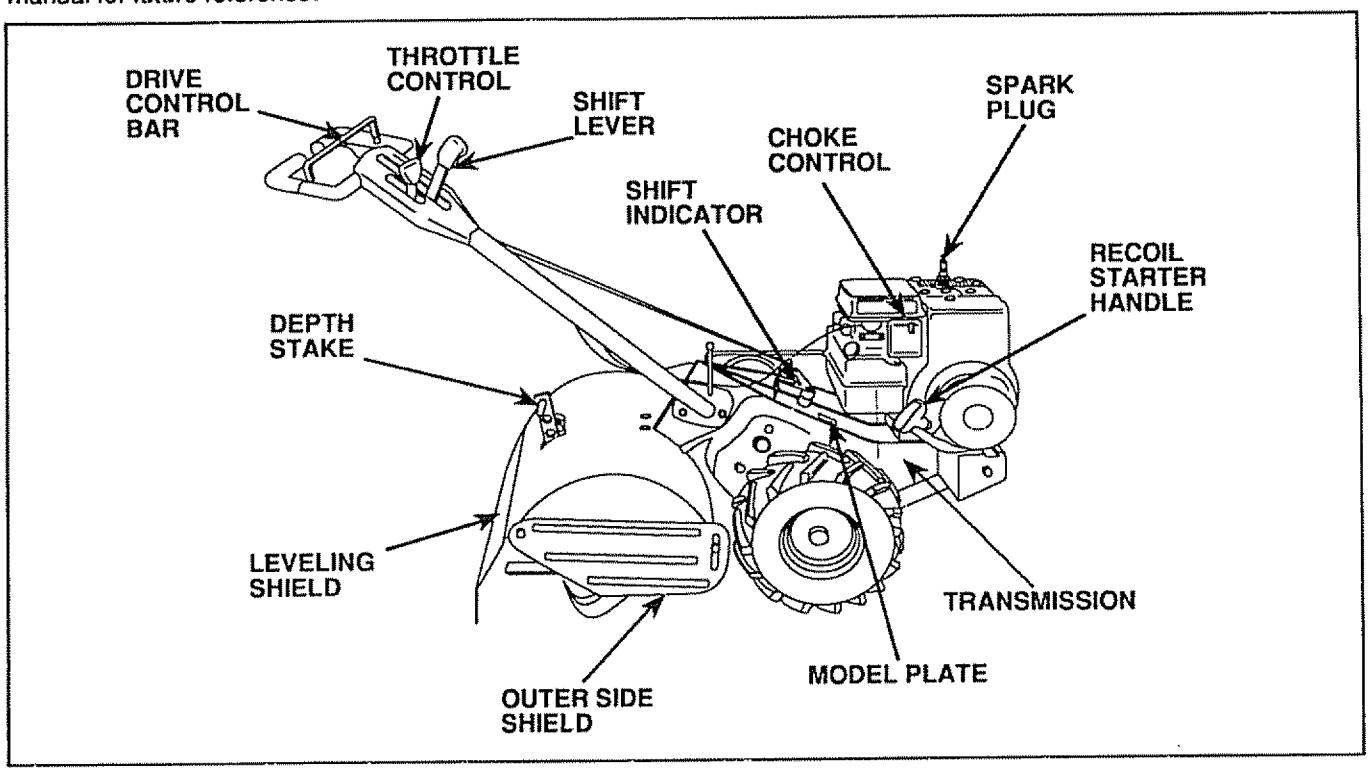

FIGURE 10

MEETS ANSI SAFETY REQUIREMENTS

Sears Rear Tine Tillers conform to the safety standards of the American National Standards Institute (Reference ANSI/OPEI B71.8-1986 American National Standard for outdoor power equipment - walk-behind powered rotary tillers - safety specifications).

DRIVE CONTROL BAR - is used to engage Tiller.
THROTTLE CONTROL - is used to control engine speed.
SHIFT LEVER - is used to shift transmission into different gears.
SHIFT LEVER INDICATOR - shows which gear the Tiller is currently in.
CHOKE CONTROL - is used when starting a cold Engine.
DEPTH STAKE - is used to set the depth at which the Tiller will dig.
LEVELING SHIELD - smooths tilled ground behind Tiller.
OUTER SIDE SHIELD - Protects small plants from being buried.

SAFETY DECAL

The decal shown full size below is located on the handle of your Tiller.

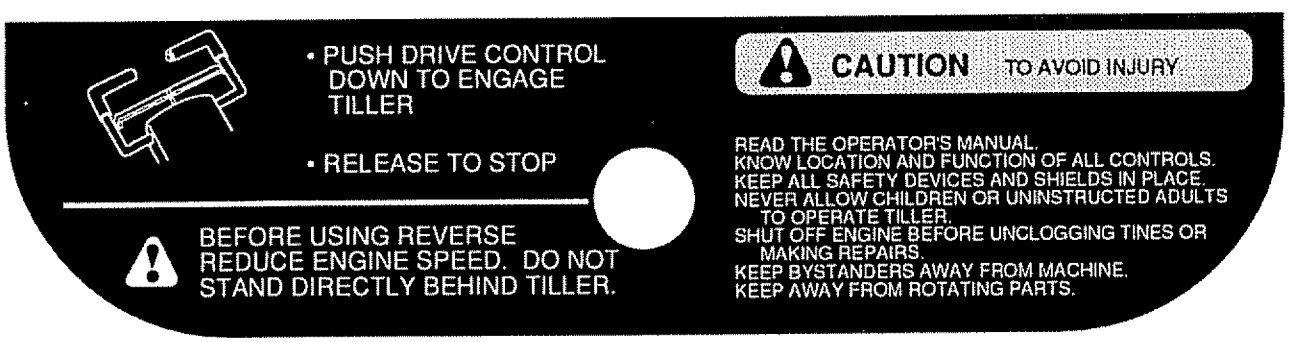

OPERATION

The operation of any Tiller can result in foreign objects thrown into the eyes, which can result in severe eye damage. Always wear safety glasses or eye shields before starting your Tiller and while tilling. We recommend Wide Vision Safety Mask for over the spectacles or standard safety glasses, available at Sears Retail or Catalog Stores.

HOW TO USE YOUR TILLER

Know how to operate all controls before adding fuel and oil or attempting to start Engine. (To stop Engine place Throttle Control in "STOP" position.)

TINE OPERATION - WITH WHEEL DRIVE

- Always release Drive Control Bar before moving Shift Lever into another position.
- Tine movement is achieved by moving Shift Lever to "T" position and engaging Drive Control Bar.

FORWARD - WHEELS ONLY / TINES STOPPED

- Release Drive Control Bar and move Shift Lever Indicator to "F" position. Engage Drive Control Bar and Tiller will move forward.

REVERSE - WHEELS ONLY / TINES STOPPED

- DO NOT STAND DIRECTLY BEHIND TILLER.
- Release the Drive Control Bar.
- Move Throttle Control to "SLOW" position.
- Move Shift Lever Indicator to "R" position.
- Hold Drive Control Bar against the Handle (Fig. 11) to start Tiller movement.

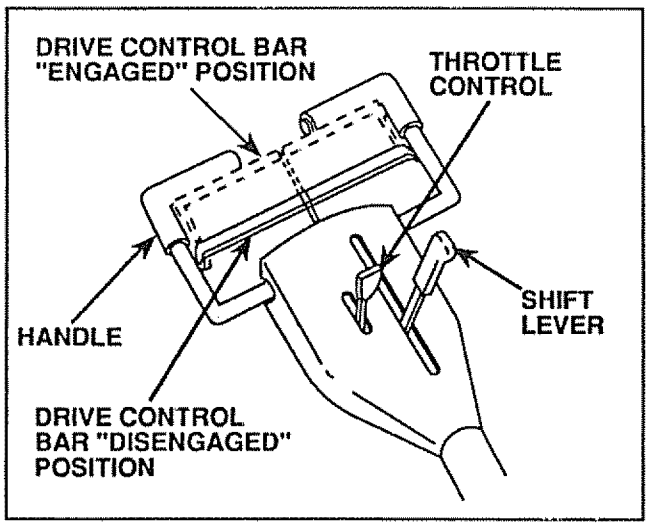

FIGURE 11

DEPTH STAKE

The Depth Stake can be raised or lowered to allow you more versatile tilling and cultivating, or to more easily transport your tiller (Fig. 12).

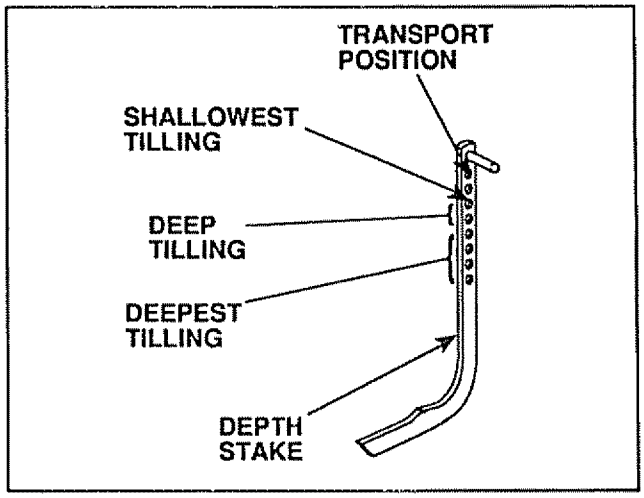

FIGURE 12

TILLING

- Release Depth Stake Pin (Fig. 13). Pull the Depth Stake up for increased tilling depth. Place Depth Stake Pin in hole of Depth Stake to lock in position.
- Place Shift Lever Indicator in the "T" position.
- Hold the Drive Control Bar against the Handle to start tilling movement. Tines and Wheels will both turn.
- Move Throttle Control to "FAST" position for deep tilling. To cultivate, Throttle Control can be set at any desired speed, depending on how fast or slow you wish to cultivate.

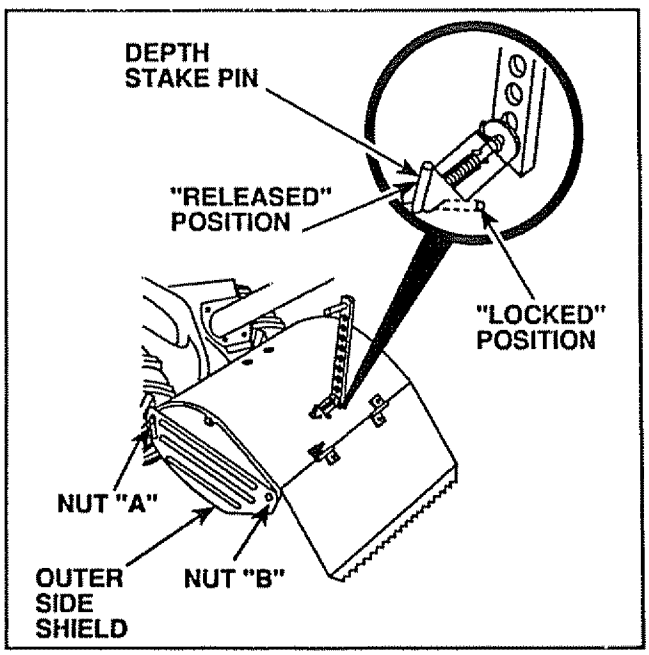

FIGURE 13

STOPPING TINES AND ENGINE

- TILLER MOVEMENT AND TINES WILL STOP WHEN DRIVE CONTROL BAR IS RELEASED.
- Move Shift Lever Indicator to "N" Neutral position.
- To stop Engine, move Throttle Control to "STOP" position.

TURNING

- Release the Drive Control Bar.
- MoveThrottle Control to "SLOW" speed.
- Place Shift Lever Indicator in the "F" Forward position. Tines will not turn.
- Lift Handle to raise Tines out of ground.
- Swing the Handle in the opposite direction you wish to turn, being careful to keep feet and legs away from Tines.
- When you have completed your turn-around, release the Drive Control Bar and lower Handle. Place Shift Lever in "T" position and move Throttle Control to desired speed. To begin tilling, hold Drive Control Bar against the Handle.

OUTER SIDE SHIELDS

The front of the Outer Side Shields are slotted so that they can be raised for deep tilling and lowered for shallow tilling to protect small plants from being buried. Loosen Nut "A" in slot and Nut "B" (Fig. 13). Move Shield to desired position (both sides). Retighten nuts.

TRANSPORTING

- Release the Depth Stake Pin. Move the Depth Stake down to the top hole for transporting the Tiller. Place Depth Stake Pin in hole of Depth Stake to lock in position. This prevents Tines from scuffing the ground.
- Place Shift Lever Indicator (Fig. 14) in "F" position for transporting.

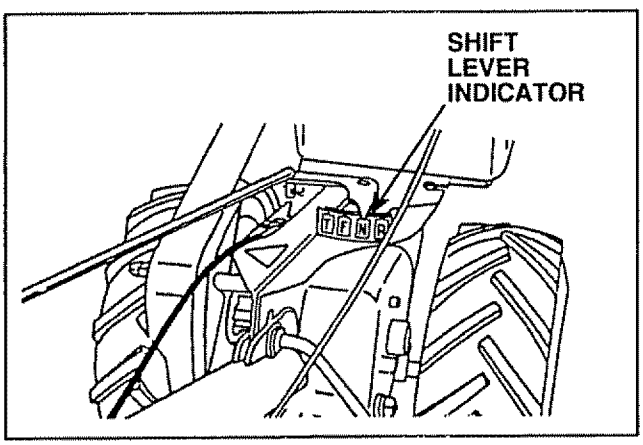

FIGURE 14

- Hold the Drive Control Bar against the Handle to start Tiller Movement. Tines will not turn.
- Move Throttle Control to desired speed before starting Engine.

CAUTION: PRACTICE THE ABOVE PROCEDURES SEVERAL TIMES BEFORE FILLING ENGINE WITH FUEL AND OIL.

BEFORE OPERATING YOUR TILLER FOR THE FIRST TIME, STUDY THIS SECTION AND THE "RULES FOR SAFE OPERATION" ON PAGE 2.

ALWAYS RELEASE DRIVE CONTROL BAR BEFORE MOVING SHIFT LEVER INTO ANOTHER POSITION.

DON'T BACK YOURSELF INTO A SOLID OBSTRUCTION SUCH AS A TREE, FENCE, ETC.

BEFORE STARTING ENGINE

CHECK ENGINE OIL LEVEL

CAUTION: BE VERY CAREFUL NOT TO ALLOW DIRT TO ENTER THE ENGINE WHEN CHECKING OR ADDING OIL OR FUEL. USE CLEAN 30 OR 10W-30 WEIGHT OIL AND STORE IN APPROVED, CLEAN, COVERED CONTAINERS. (DO NOT USE PRESSURIZED STARTING FLUID AS SEVERE INTERNAL DAMAGE MAY OCCUR DUE TO LOSS OF LUBRICATION).

- With Engine level, remove Oil Filler Plug (Fig. 15).
- Engine oil should be to point of almost overflowing. Engine oil capacity is about 1-1/4 pints (20 ounces).

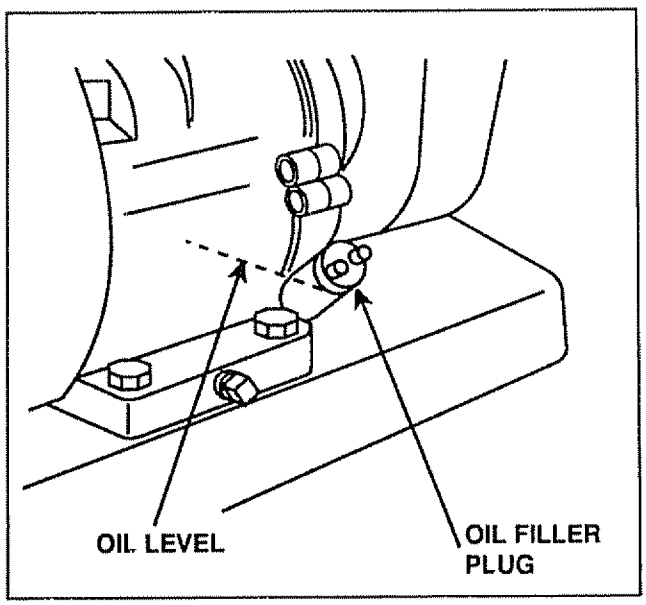

FIGURE 15

FILL FUEL TANK

- To fill Fuel Tank (Fig. 16), use fresh, clean regular unleaded automotive gasoline. Capacity is about 2 quarts.

FILL TO WITHIN 1/2 INCH OF TOP OF FUEL TANK TO PREVENT SPILLS AND TO ALLOW FOR FUEL EXPANSION. IF GASOLINE IS ACCIDENTALLY SPILLED, MOVE MACHINE AWAY FROM AREA OF SPILL. AVOID CREATING ANY SOURCE OF IGNITION UNTIL GASOLINE VAPORS HAVE DISAPPEARED.

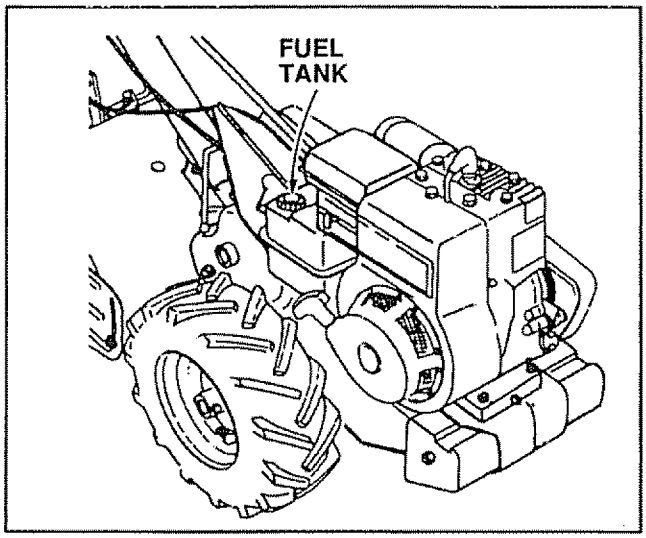

FIGURE 16

CAUTION: EXPERIENCE INDICATES THAT ALCOHOL BLENDED FUELS (CALLED GASOHOL OR USING ETHANOL OR METHANOL) CAN ATTRACT MOISTURE WHICH LEADS TO SEPARATION AND FORMATION OF ACIDS DURING STORAGE. ACIDIC GAS CAN DAMAGE THE FUEL SYSTEM OF AN ENGINE WHILE IN STORAGE.

TO AVOID ENGINE PROBLEMS, THE FUEL SYSTEM SHOULD BE EMPTIED BEFORE STORAGE FOR 30 DAYS OR LONGER. DRAIN THE GAS TANK, START THE ENGINE AND LET IT RUN UNTIL THE FUEL LINES AND CARBURETOR ARE EMPTY. USE FRESH FUEL NEXT SEASON. SEE STORAGE INSTRUCTIONS FOR ADDITIONAL INFORMATION.

NEVER USE ENGINE OR CARBURETOR CLEANER PRODUCTS IN THE FUEL TANK OR PERMANENT DAMAGE MAY OCCUR.

TO START ENGINE

KEEP THE DRIVE CONTROL BAR IN "DISENGAGED" POSITION WHEN STARTING ENGINE.

- Make sure Spark Plug Wire is properly connected.
- Move the Shift Lever Indicator to "N" Neutral position.
- Place Throttle Control in "FAST" position.
- Place Choke Control in "CHOKE" position if the Engine is cold. A warm Engine may not require choking to start.
- Grasp Starter Handle with one hand and grasp the Tiller Handle with other hand. Pull Rope out slowly until Engine reaches start of Compression Cycle (Rope will pull slightly harder at this point).
- Pull Rope with a rapid, continuous, full arm stroke. Keep a firm grip on Starter Handle and let Rope rewind slowly. Do not let Starter Handle snap back against Starter.
- When Engine starts, place Choke Control on Engine halfway between "CHOKE" and "RUN" positions and then to "RUN" position as Engine warms up.
- Move Throttle Control halfway between "FAST" and "STOP" position for a few minutes to warm up.

NOTE: In order to idle smoothly, a new Engine may require 3 to 5 minutes running time above slow idle speed. Idle speed has been adjusted to be correct after this break-in period.

TILLING/CULTIVATING TIPS

TILLING

- Tilling is digging into, turning over, and breaking up packed soil before planting. Loose, unpacked soil helps root growth. Best tilling depth is 4" to 6". A Tiller will also clear the soil of unwanted vegetation. The decomposition of this vegetable matter enriches the soil. Depending on the climate (rainfall and wind), it may be advisable to till the soil at the end of the growing season to further condition the soil.
- Soil conditions are important for proper tilling. Tines will not readily penetrate dry, hard soil which may contribute to excessive bounce and difficult handling of your Tiller. Hard soil should be moistened before tilling; however, extremely wet soil will "ball-up" or clump during tilling. Wait until the soil is less wet in order to achieve the best results. When tilling in the fall, remove vines and long grass to prevent them from wrapping around the Tine Shaft and slowing your tilling operation.

- For easier handling of your Tiller, leave about 8 inches of untilled soil between the first and second tilling passes. The third pass will be between the first and second (Fig. 17).

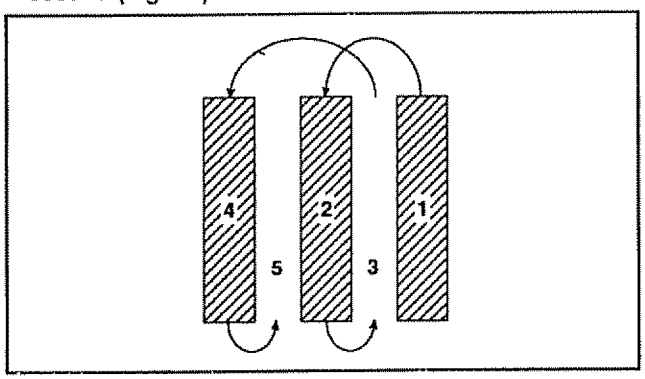

FIGURE 17

- Do not lean on the Handle. This takes weight off the Wheels and reduces traction. To get through a really tough section of sod or hard ground, apply upward pressure on Handle or lower the Depth Stake.

CULTIVATING

Cultivating is destroying the weeds between rows to prevent them from robbing nourishment and moisture from the plants. At the same time, breaking up the upper layer of soil crust will help retain moisture in the soil. Best digging depth is 1" to 3". Lower the Outer Side Shields to protect small plants from being buried.

- Cultivate up and down the rows at a speed which will allow Tines to uproot weeds and leave the ground in rough condition, promoting no further growth of weeds and grass (Fig. 18).

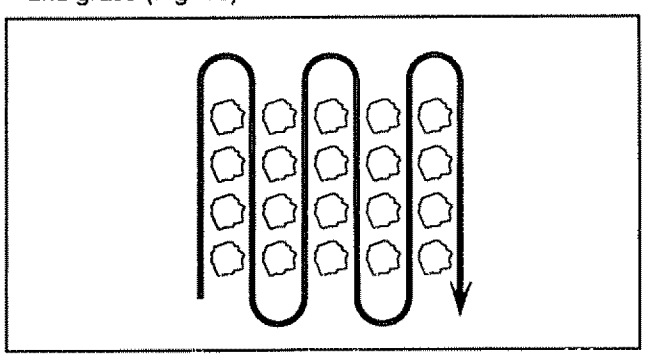

FIGURE 18

ADJUST WHEELS FOR CULTIVATING

- Place blocks under right hand side of Tiller and remove Hairpin Clip and Retainer Pin from right hand Wheel (Fig. 19).
- Move Wheel outward and approximately 1 inch until hole in Inner Wheel Hub lines up with inner hole in Axle.

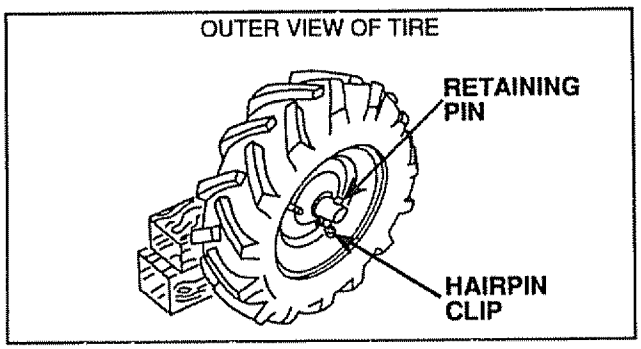

FIGURE 19

- Replace Retainer Pin and Hairpin Clip on inside of Wheel (Fig. 20) and remove blocks.
- Repeat preceding steps on left hand side.

NOTE: In extremely rough conditions and while cultivating, the Wheels should be moved outward on the Axle for increased stability.

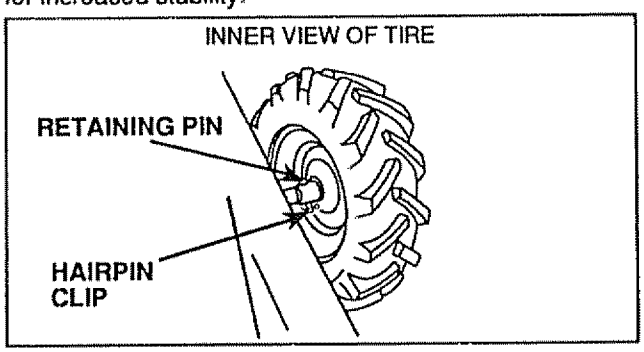

FIGURE 20

WINTER OPERATION (UNDER 32°F)

ENGINE LUBRICATION

- Engine oil must be changed before the air temperature drops below 32°F. Drain the Engine oil when Tiller Engine is at operating temperature.
- By refilling the Engine with 5W30 oil you will promote easier starting.

NOTE: Be sure to change Engine oil back to S.A.E. 30 or 10W30 (SD, SE, or SF) for spring Tilling.

FUEL

Use fresh, clean, regular unleaded automotive gasoline. Capacity is about 2 quarts.

COLD WEATHER STARTING HINTS

- Be sure to use the proper oil and gasoline.
- Keep Drive Control Bar in "DISENGAGED" position when starting the Engine.
- Set Throttle Control at medium to fast position and use full Choke for starting. Slowly move Choke Control to "RUN" position as Engine warms up.

DISCONNECT SPARK PLUG WIRE FROM SPARK PLUG BEFORE PERFORMING ANY MAINTENANCE (EXCEPT CARBURETOR ADJUSTMENT) TO PREVENT ACCIDENTAL STARTING OF ENGINE.

PREVENT FIRES! KEEP THE ENGINE FREE OF GRASS, LEAVES, SPILLED OIL, OR FUEL. REMOVE FUEL FROM TANK BEFORE TIPPING UNIT FOR MAINTENANCE. CLEAN MUFFLER AREA OF ALL GRASS, DIRT, AND DEBRIS.

DO NOT TOUCH HOT MUFFLER OR CYLINDER FINS AS CONTACT MAY CAUSE BURNS.

COOLING SYSTEM

Your Engine is air cooled. For proper Engine performance and long life KEEP YOUR ENGINE CLEAN.

- Clean Air Screen (Fig. 21) frequently using a stiff bristled brush.
- Remove Blower Housing and clean as necessary.
- Keep Cylinder Fins free of dirt and chaff.

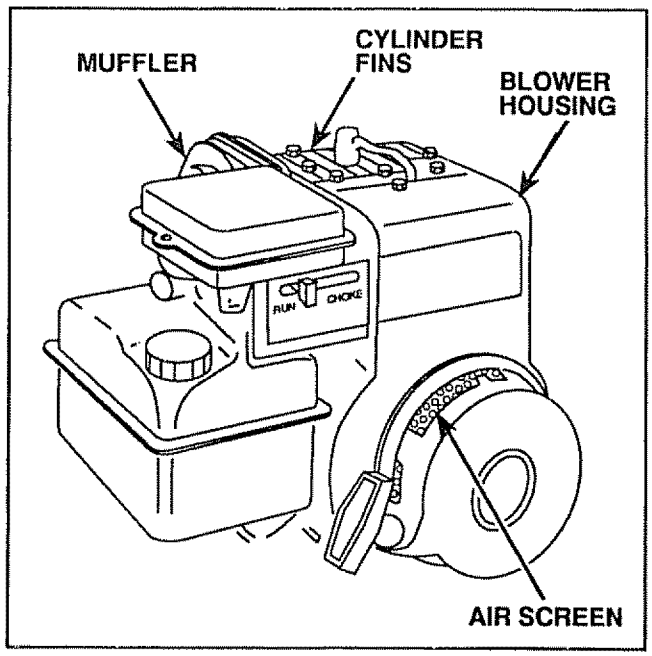

FIGURE 21

AIR CLEANER

Replace Air Cleaner Cartridge every twenty-five hours, more often if Engine is used in very dusty conditions:

- Loosen Air Cleaner Screws, one on each side of Cover (Fig. 22).

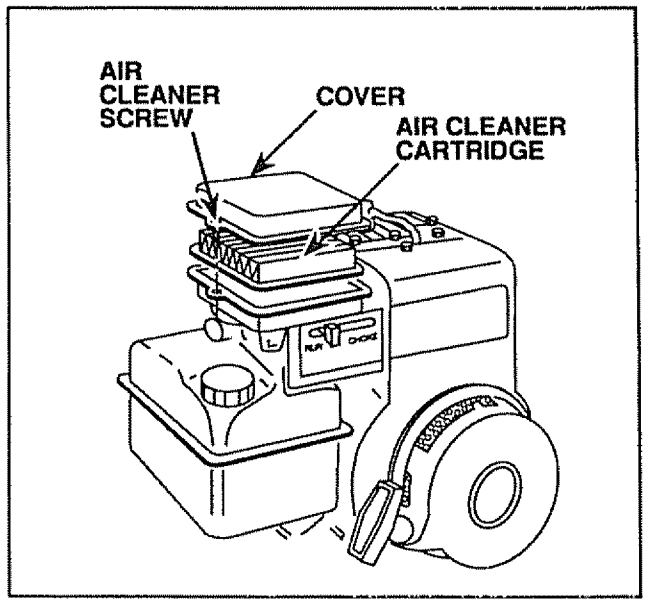

FIGURE 22

- Remove Air Cleaner Cover.
- Carefully remove Air Cleaner Cartridge. Be careful. Do not allow dirt or debris to fall into Carburetor.
- Install new Air Cleaner Cartridge. Clean and replace Cover. Tighten Screws securely.

MUFFLER

Do not operate Tiller without Muffler (Fig. 21). Do not tamper with exhaust system. Damaged Mufflers or Spark Arresters could create a fire hazard. Inspect periodically and replace if necessary. If your Engine is equipped with a Spark Arrester Screen Assembly, remove every 50 hours for cleaning and inspection. Replace if damaged.

SPARK PLUG

- The Spark Plug should be changed every 50 hours of operation or at the beginning of every tilling season.
- Set gap at .030". Order Spark Plug listed in the Repair Parts Section of this Manual.

SPARKING CAN OCCUR IF SPARK PLUG WIRE TERMINAL DOES NOT FIT FIRMLY ON SPARK PLUG. REFORM TERMINAL IF NECESSARY.

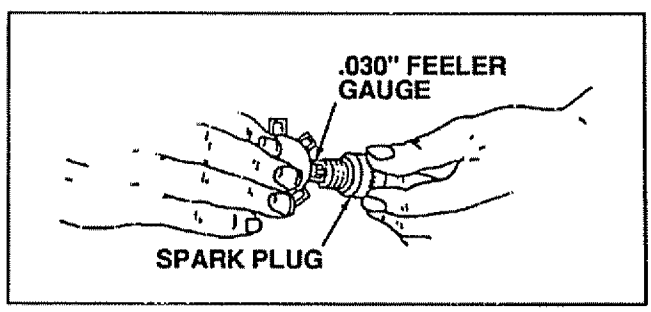

FIGURE 23

ENGINE LUBRICATION

Your four cycle Engine will normally consume some oil, therefore check Engine oil level regularly—approximately every five hours of operation and before each usage. Stop Engine and wait several minutes before checking oil level. With Engine level the oil must be even with oil fill (Fig. 24). Change Engine oil after the first two hours of operation and every twenty five hours thereafter or at the beginning of every tilling season.

- Drain oil while Engine is warm.
- Remove Oil Drain Plug (Fig. 24).
- Tip Tiller forward and catch oil in a suitable container.
- When Engine is drained of all oil, replace Oil Drain Plug.
- Refill with fresh SAE 30 or SAE 10W-30 weight oil.

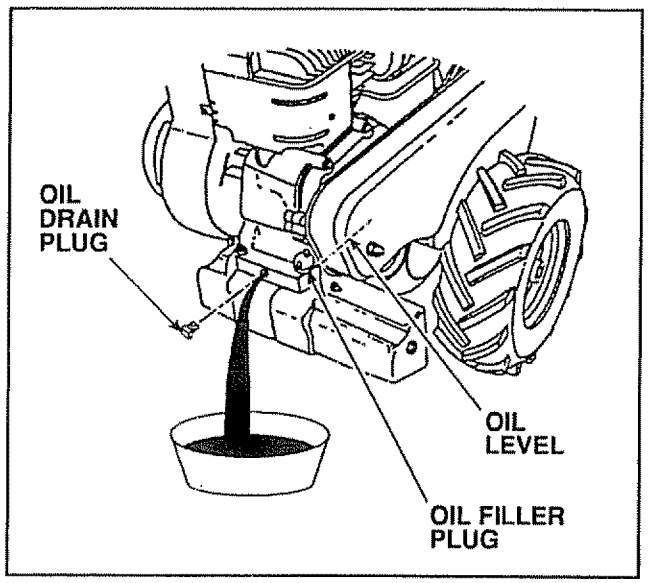

FIGURE 24

TRANSMISSION

Your Transmission is sealed and will only require lubrication if serviced.

FINISH

Keep your Tiller finish and Wheels free of gasoline, oil, etc. Protect painted surfaces with automotive type wax.

SERVICE RECOMMENDATIONS

LUBRICATION CHART - OIL PIVOT POINTS

USE SAE 30 OIL

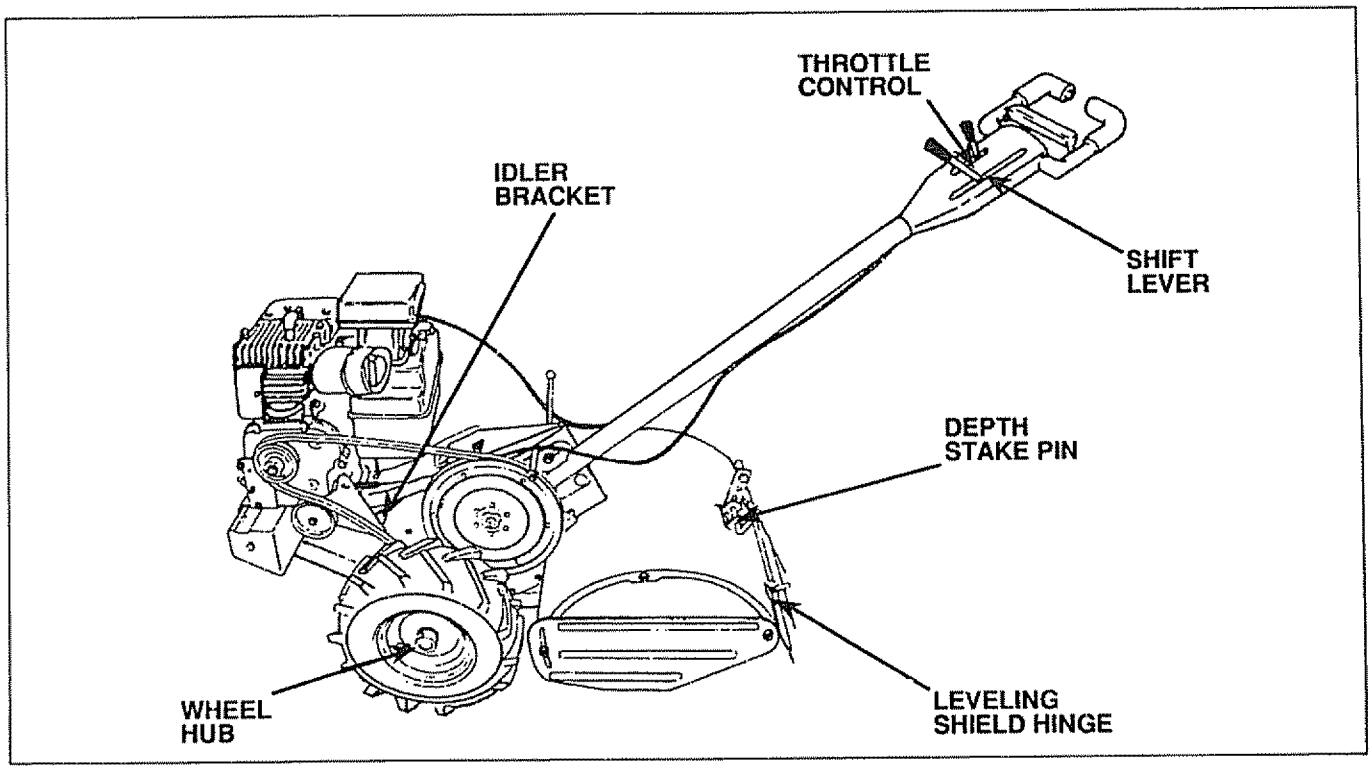

FIGURE 25

MAINTENANCE CHECK LIST SERVICE RECORD FILL IN DATES AS YOU COMPLETE REGULAR SERVICE	PAGE NUMBERS	BEFORE EACH USE	1st 2 HOURS	EVERY 5 HOURS	EVERY 25 HOURS	EVERY 50 HOURS	SERVICE DATES									
Check Engine Oil Level	11	✔		✔												
Change Engine Oil	15		✔		✔											
Oil Pivot points	16			✔												
Inspect Spark Arrester Muffler	14					✔										
Inspect Air Screen	14	✔														
Clean Air Cleaner	14				✔											
Clean Engine Cylinder Fins	14				✔											
Replace Spark Plug	14					✔										

POSITION HANDLE

Select Handle height suitable for you and your tilling conditions. Handle height will change when Tiller digs into the soil.

TO ADJUST HANDLE:

- First loosen Handle Lock Lever (Fig. 26).
- Handle can be positioned at different settings between "HIGH" and "LOW" positions.
- Retighten Handle Lock Lever securely after adjusting.

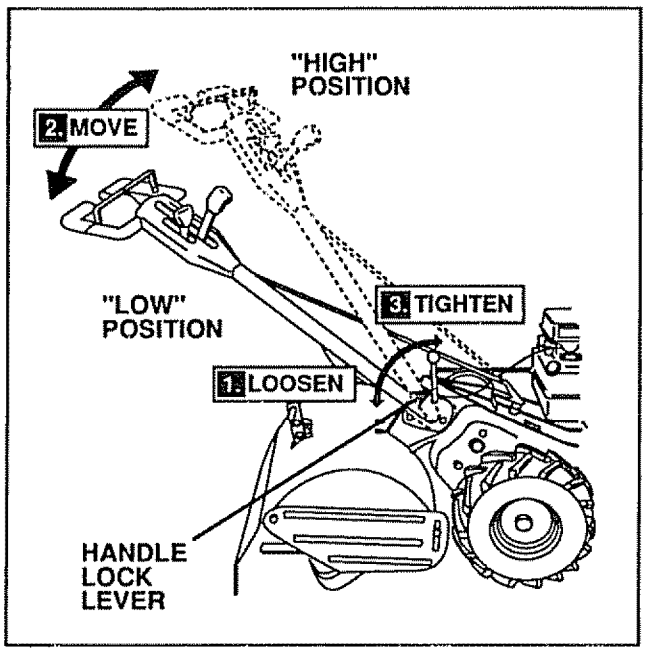

FIGURE 26

TIRE CARE

WHEN MOUNTING TIRES, UNLESS BEADS ARE SEATED, OVERINFLATION CAN CAUSE AN EXPLOSION.

- Maintain 20 pounds of Tire pressure. If Tire pressures are not equal, Tiller will pull to one side.
- Keep Tires free of gasoline or oil which can damage rubber.

WHEEL REMOVAL

To remove Wheel and Tire for repair:

- Place blocks under the Transmission to keep Tiller from tipping.
- Remove Hairpin Clip and Retaining Pin from Wheel (Fig. 27).
- Remove Wheel and Tire.
- Repair Tire and reassemble.

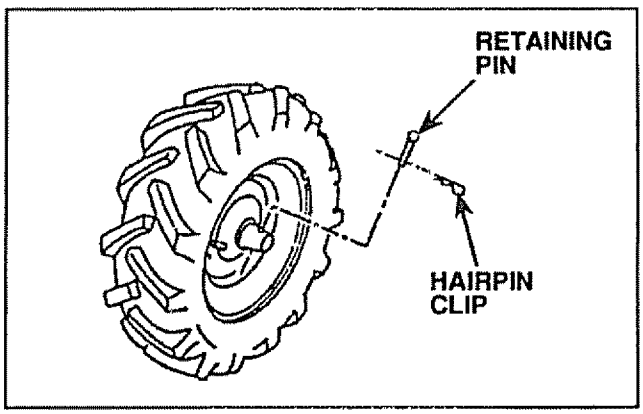

FIGURE 27

GROUND DRIVE BELT REPLACEMENT

- Remove Hairpin Clip and Retaining Pin from Hub of left hand Wheel. Pull Wheel out from Tiller about 1 inch.
- Remove Belt Guard by removing two (2) Cap Nuts, one (1) Hex Nut and three (3) Washers so that the Belt Guard can slide straight out away from the Engine (Fig. 28).

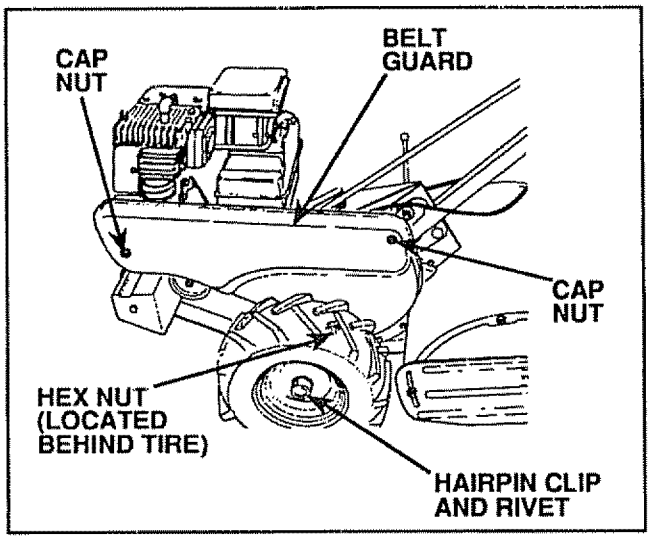

FIGURE 28

- Loosen Belt Guides "A" and "B", and also Nuts "C" and "D" (Fig. 29).
- Remove old Belt by slipping from Engine Pulley first.
- Place Belt in groove of Transmission Pulley and into groove of Engine Pulley. BELT MUST BE IN GROOVE ON TOP OF IDLER PULLEY. NOTE POSITION OF BELT TO GUIDES.
- Tighten Belt Guides "A" and "B" and Nuts "C" and "D".
- Replace Belt Guard, Washers, Cap Nuts, and Hex Nut.
- Reposition Wheel and replace Retaining Pin and Hairpin Clip.

GROUND DRIVE BELT ADJUSTMENT

For proper belt tension, the Extension Spring should have about 5/8 inch stretch with Drive Control Bar in "ENGAGED" position. This tension can be obtained as follows:

- Loosen Cable Clip Screw securing the Drive Control Cable (Fig. 29 - INSET A).
- Slide Cable forward for less tension and rearward for more tension until about 5/8 inch stretch is obtained while the Drive Control Bar is engaged (Fig. 29 - INSET B).
- Tighten Cable Clip Screw securely.

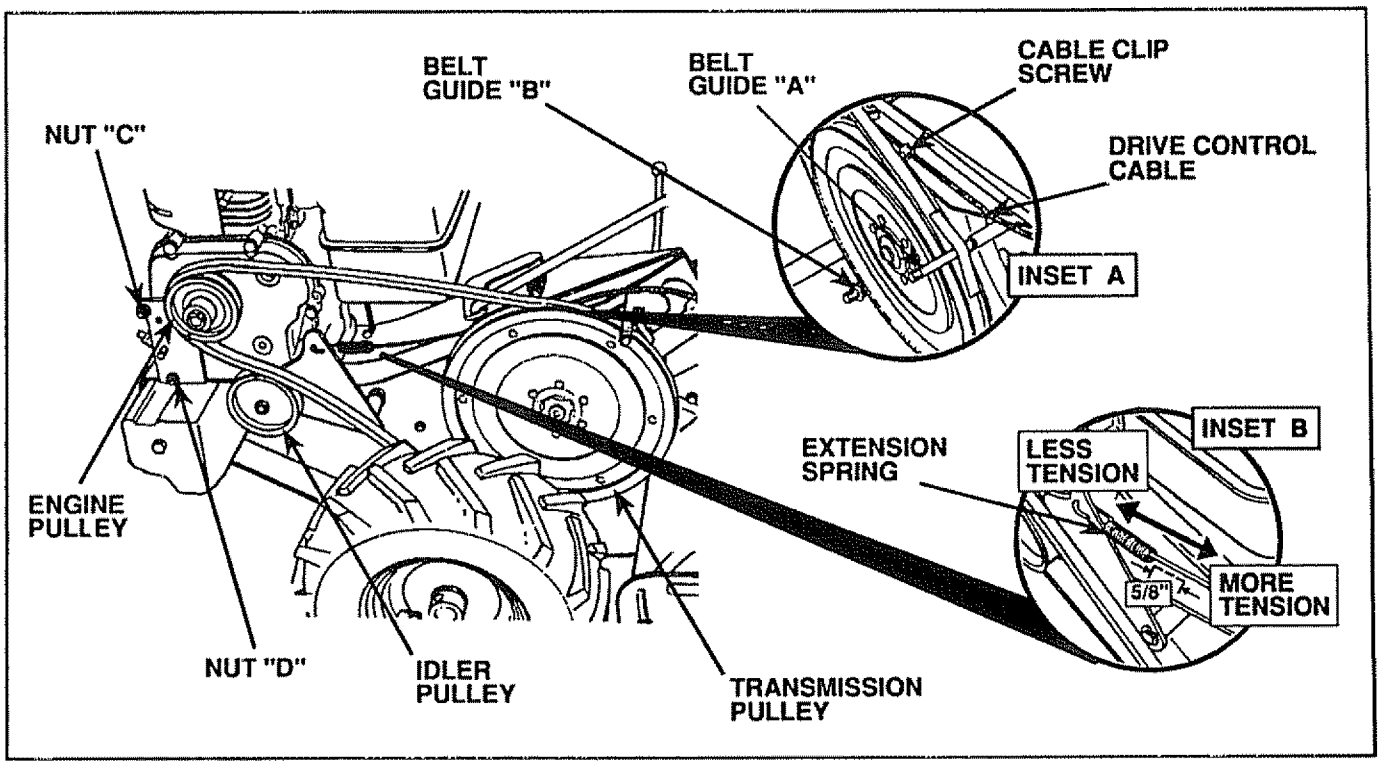

FIGURE 29

TINE REPLACEMENT

STOP THE ENGINE AND REMOVE THE SPARK PLUG WIRE FROM THE SPARK PLUG BEFORE CLEANING OUT THE TINES BY HAND. USE CAUTION : TINES ARE SHARP.

A badly worn Tine causes your Tiller to work harder and dig more shallow. Most important, worn Tines cannot chop and shred organic matter as effectively nor bury it as deeply as good Tines. A Tine this worn needs to be replaced (Fig. 30).

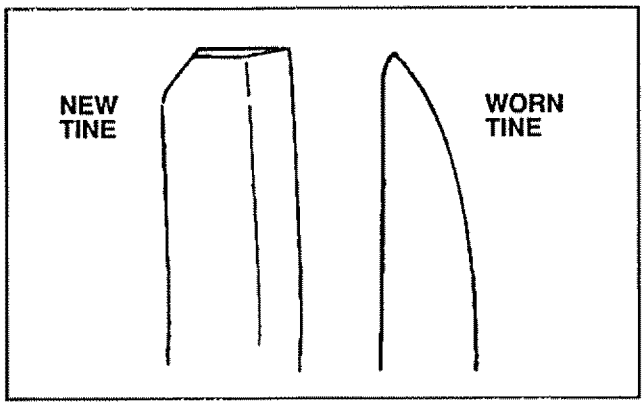

FIGURE 30

- To maintain the superb tilling performance of this machine the Tines should be checked for sharpness, wear, and bending, particularly the Tines which are next to the Transmission. If the gap between the Tines exceeds 3-1/2 inches, they should be replaced or straightened as necessary (Fig. 31).

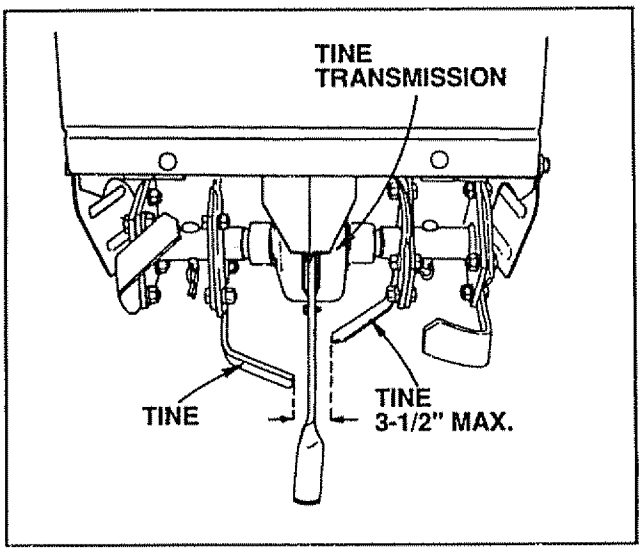

FIGURE 31

- New Tines should be assembled as shown below (Fig. 32). Sharpened Tine edges will rotate rearward from above.

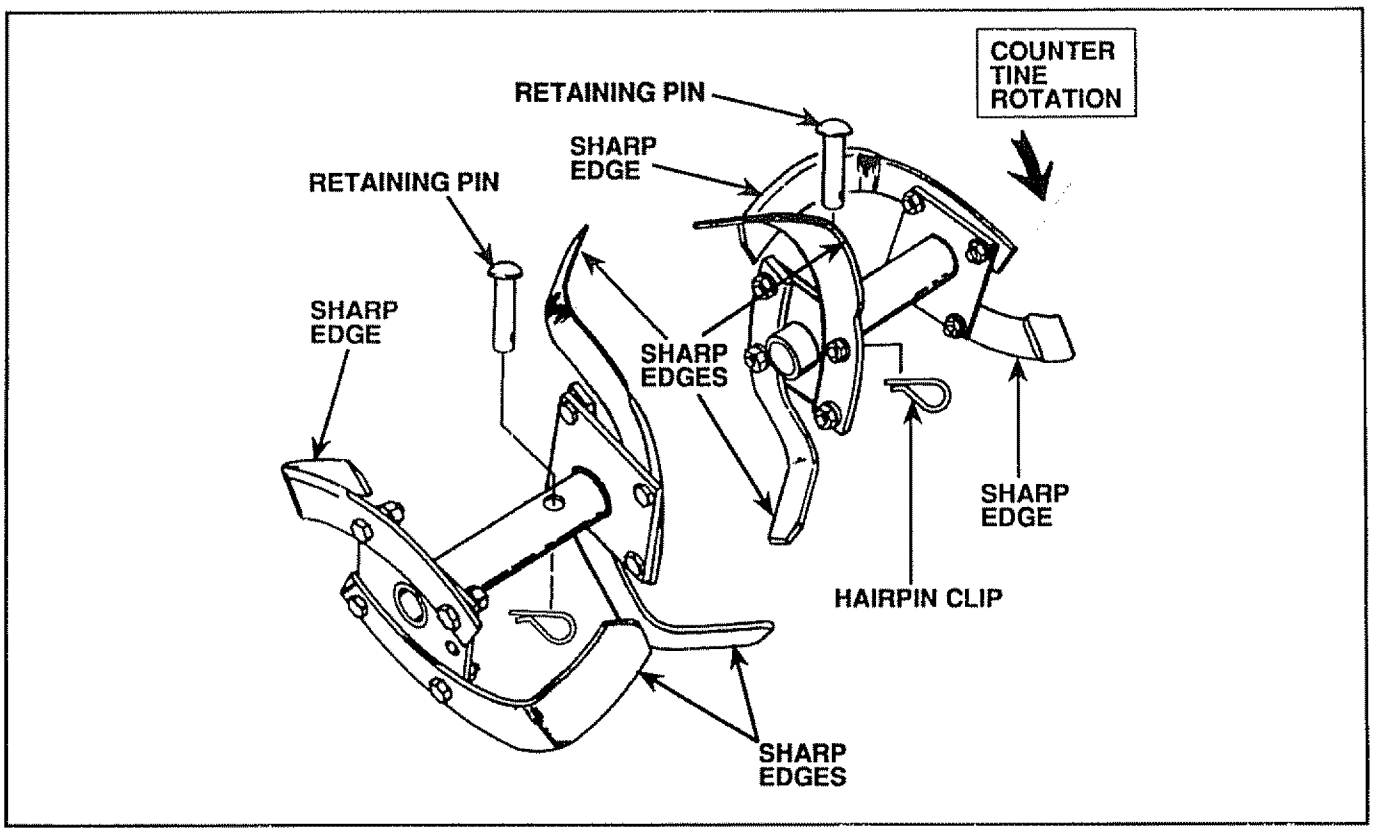

FIGURE 32

CARBURETOR

NOTE: A dirty Air Cleaner will cause the Engine to run rough. Be sure Air Cleaner is clean before adjustments. Factory settings are satisfactory for most applications and conditions. If adjustments are needed, proceed as follows:

Never attempt to change maximum Engine speed. This is preset at the factory and should only be changed by a qualified service technician who has the necessary equipment. The Carburetor mixture may need re-adjusting if Engine lacks power or does not idle properly.

MIXTURE ADJUSTMENT

- Turn Needle Valve (Fig. 33) clockwise (↷) until it just closes. Valve may be damaged by turning Needle Valve in too far.
- Open Needle Valve 1-1/2 turns counterclockwise (↶). This initial adjustment will permit the Engine to be started and warmed up prior to final adjustment.
- Start the Engine. Allow Engine to warm up for about 5 minutes before proceeding.
- Place Throttle Control in "IDLE" position.
- Turn Needle Valve in until Engine slows (clockwise (↷) lean mixture).
- Next turn Needle Valve out past smooth operating point until Engine runs unevenly (counterclockwise (↶) rich mixture).
- Now turn Needle Valve to the midpoint between rich and lean so the Engine runs smoothly.

IDLE RPM ADJUSTMENT

- To adjust Idle RPM, Rotate Throttle Linkage counterclockwise (↶) and hold against stop while adjusting Idle Speed Adjusting Screw to obtain 1750 RPM. Release Throttle Linkage.

CHECKING ADJUSTMENT

- Test the Engine by tilling. If Engine dies out, it usually indicates that the mixture is slightly lean and it may be necessary to turn the Needle Valve counterclockwise (↶) slightly to provide a richer mixture. This richer mixture may cause a slight unevenness in idling.

THROTTLE CONTROL CABLE ADJUSTMENT

CAUTION: NEVER TAMPER WITH THE ENGINE GOVERNOR, WHICH IS FACTORY SET FOR PROPER ENGINE SPEED.

- Loosen Throttle Cable Adjusting Screw.
- With Throttle Control in "FAST" position and Cable connected to Bellcrank, pull Cable backward through Screw until Bellcrank is as far rearward as it will go.
- Tighten Adjusting Screw.

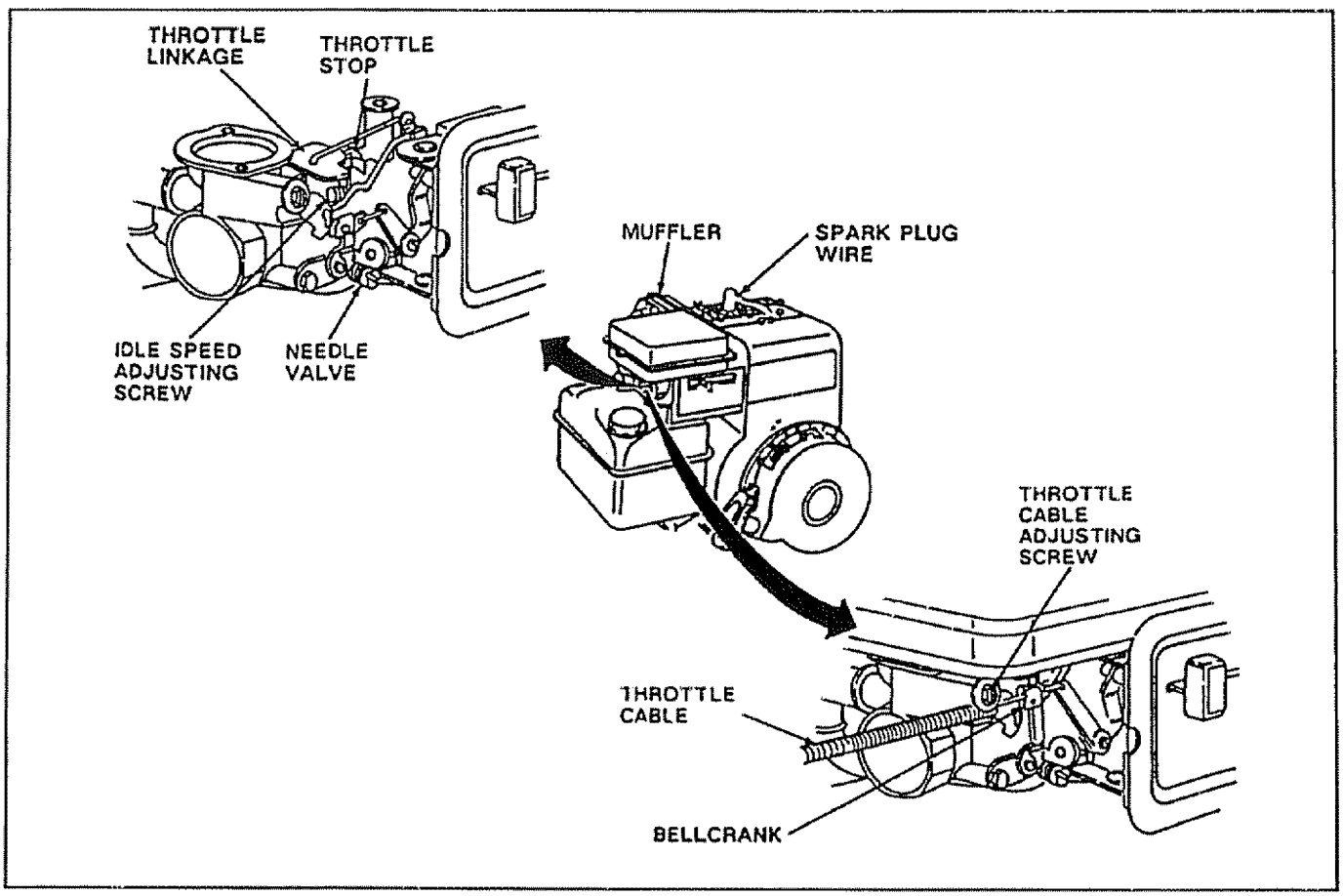

FIGURE 33

STORAGE

STORAGE

Keep your Tiller in a weatherproof, dry building. To avoid Engine problems, the fuel system should be emptied before storage of 30 days or longer.

- Drain Fuel Tank; run Engine until gasoline in Carburetor is used.
- While Engine is still warm, drain oil from Engine. Refill with fresh oil.
- Remove Spark Plug; pour one half ounce of clean engine oil into cylinder. Pull Starter Handle slowly several times to distribute oil. Replace Spark Plug.
- Clean entire Tiller, especially Cylinder Fins, Blower Housing and Air Screen. Tighten all bolts and nuts.

Gasoline stored for several months will lose its volatility (ability to burn effectively); therefore, always use up gasoline at the end of the season. Do not store, spill, or use gasoline near an open flame or devices such as a stove, furnace, or water heater which utilize a pilot light or devices that can create a spark.

CAUTION: IT IS IMPORTANT TO PREVENT GUM DEPOSITS FROM FORMING IN ESSENTIAL FUEL SYSTEM PARTS SUCH AS THE CARBURETOR, FUEL FILTER, FUEL HOSE, OR TANK DURING STORAGE. ALSO, EXPERIENCE INDICATES THAT ALCOHOL BLENDED FUELS (CALLED GASOHOL OR USING ETHANOL OR METHANOL) CAN ATTRACT MOISTURE WHICH LEADS TO SEPARATION AND FORMATION OF ACIDS DURING STORAGE. ACIDIC GAS CAN DAMAGE THE FUEL SYSTEM OF AN ENGINE WHILE IN STORAGE.

TROUBLE SHOOTING

PROBLEM: Probable Cause	Possible Remedy
WILL NOT START OR HARD TO START:	
No gasoline in Fuel Tank	Fill Tank with gasoline
Throttle Control not set properly	Place Throttle Control in "FAST" position
Choked improperly, flooded Engine	Move Choke Control to "RUN" position or place Throttle Control in "FAST" position and pull Starter several times to clear out gas
Clogged Fuel Tank	Remove and clean
Dirty Air Cleaner Cartridge	Remove and clean or replace
Spark Plug Dirty or improper gap	Clean, adjust gap or replace
Water in gasoline or old fuel	Drain Fuel Tank and Carburetor, use fresh fuel and replace Spark Plug
Improper Carburetor adjustment	Make necessary adjustments
ENGINE MISSES OR LACKS POWER:	
Engine overloaded	Set Depth Stake for shallower tilling
Clogged Fuel Tank	Remove and clean
Partially plugged Air Cleaner	Remove and clean or replace
Improper Carburetor adjustment	Make necessary adjustments
Dirty Air Screen	Clean Air Screen
Spark Plug dirty, improper gap, or wrong type	Replace Spark Plug and adjust gap
Poor compression	Major Engine Overhaul
Oil in gasoline	Drain and refill Gas Tank and Carburetor
ENGINE OVERHEATS:	
Dirty Air Screen	Clean Air Screen
Low oil level or dirty oil	Add or change oil
Dirty Engine	Clean Cylinder Fins, Air Screen, and Muffler area
Partially Plugged Muffler	Remove and clean Muffler
Improper Carburetor adjustment	Make necessary adjustments
SOIL BALLS UP OR CLUMPS:	
Ground too wet	Wait for more favorable soil conditions

SERVICE NOTES

REPAIR PARTS

4 H.P. CRAFTSMAN TILLER - MODEL NUMBER 917.299642

HANDLE ASSEMBLY

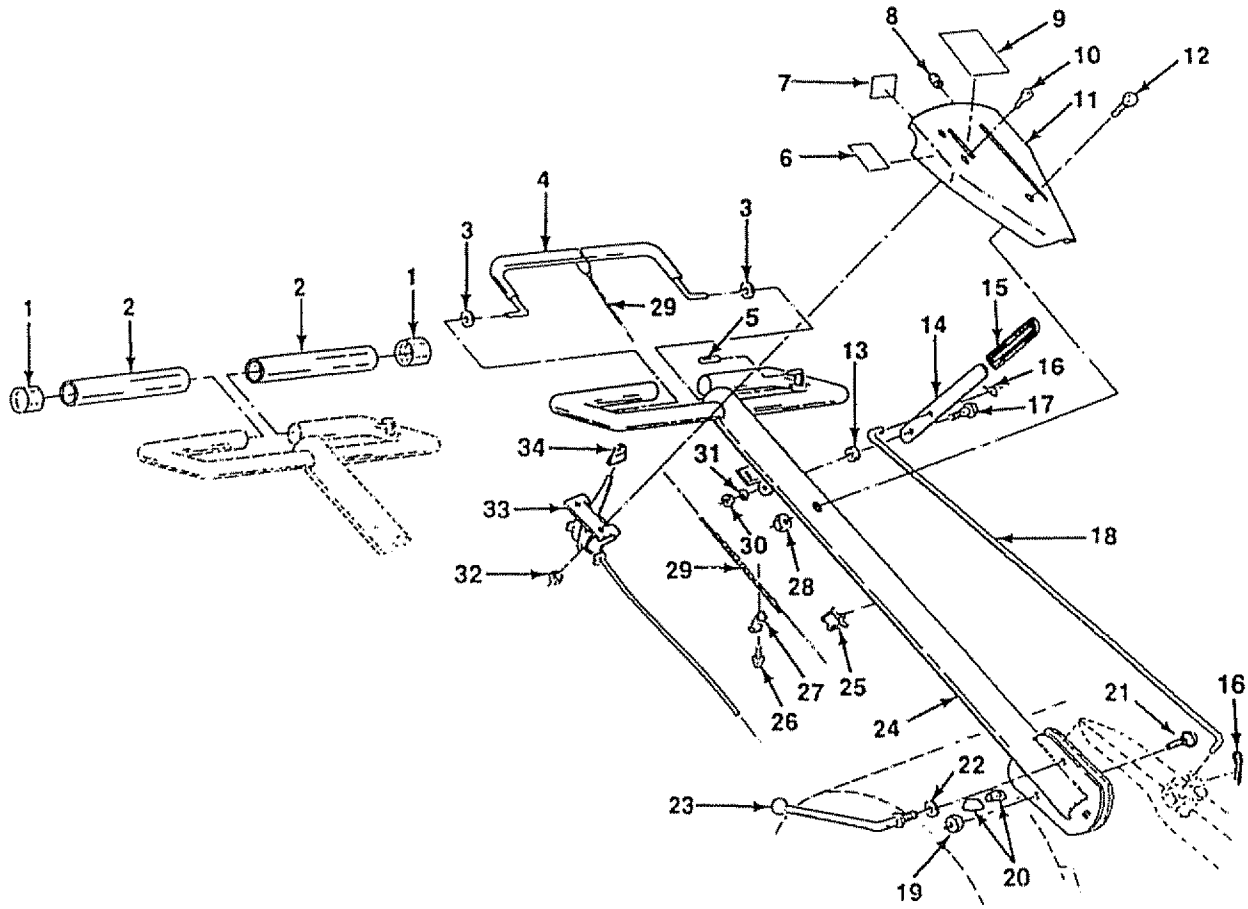

KEY NO.	PART NO.	DESCRIPTION
1	110707X	Cap, Sleeve
2	110674X	Grip, Handle
3	110673X	Grommet, Handle
4	110672X	Bar, Drive Control Assembly
5	6712J	Cap, Vinyl
6	120431X	Decal, Hand Placement
7	121859X	Decal, Caution - Clutch
8	110641X	Bushing, Split
9	110718X	Decal, Control Panel
10	STD511005*	Screw, Mach. Pan Head. C.R. #10-24 x 1/2
11	110548X	Panel, Control
12	STD533125*	Bolt, Carr 5/16 - 18 UNC x 2-3/8 Gr5.
13	109313X	Grommet, Rubber
14	110741X	Handle, Shift
15	110646X	Handle, Grip
16	STD624003*	Clip, Hairpin
17	81328	Bolt, Shoulder
18	110702X	Rod, Shift

KEY NO.	PART NO.	DESCRIPTION
19	STD541437*	Nut, Centerlock - 3/8 - 16
20	109229X	Lock, Handle
21	STD533710*	Bolt, Rd. Hd. Sq. Neck Carr. 3/8 - 16 x 1 Gr 5.
22	19131611	Washer, 13/32 x 1 x 11 Ga.
23	109228X	Lever, Lock - Handle
24	121213X	Handle, Assemble
25	121145X	Clip, Plastic Cable
26	86777	Screw, Hex Washer Hd Slt. #10-24 x 1/2
27	9484R	Clip
28	73970500	Nut, Lock Hex. Flange
29	110675X	Clutch, Cable
30	STD541025*	Nut, Hex 1/4-20
31	STD551125*	Washer, Lock 1/4
32	STD541462*	Nut, Keps. #10-24
33	110670X	Throttle, Control
34	110680X	Knob, Control
--	124340XOE	Owners, Manual

* STANDARD HARDWARE--PURCHASE LOCALLY

REPAIR PARTS

4 H.P. CRAFTSMAN TILLER - MODEL NUMBER 917.299642

MAINFRAME, LEFT SIDE

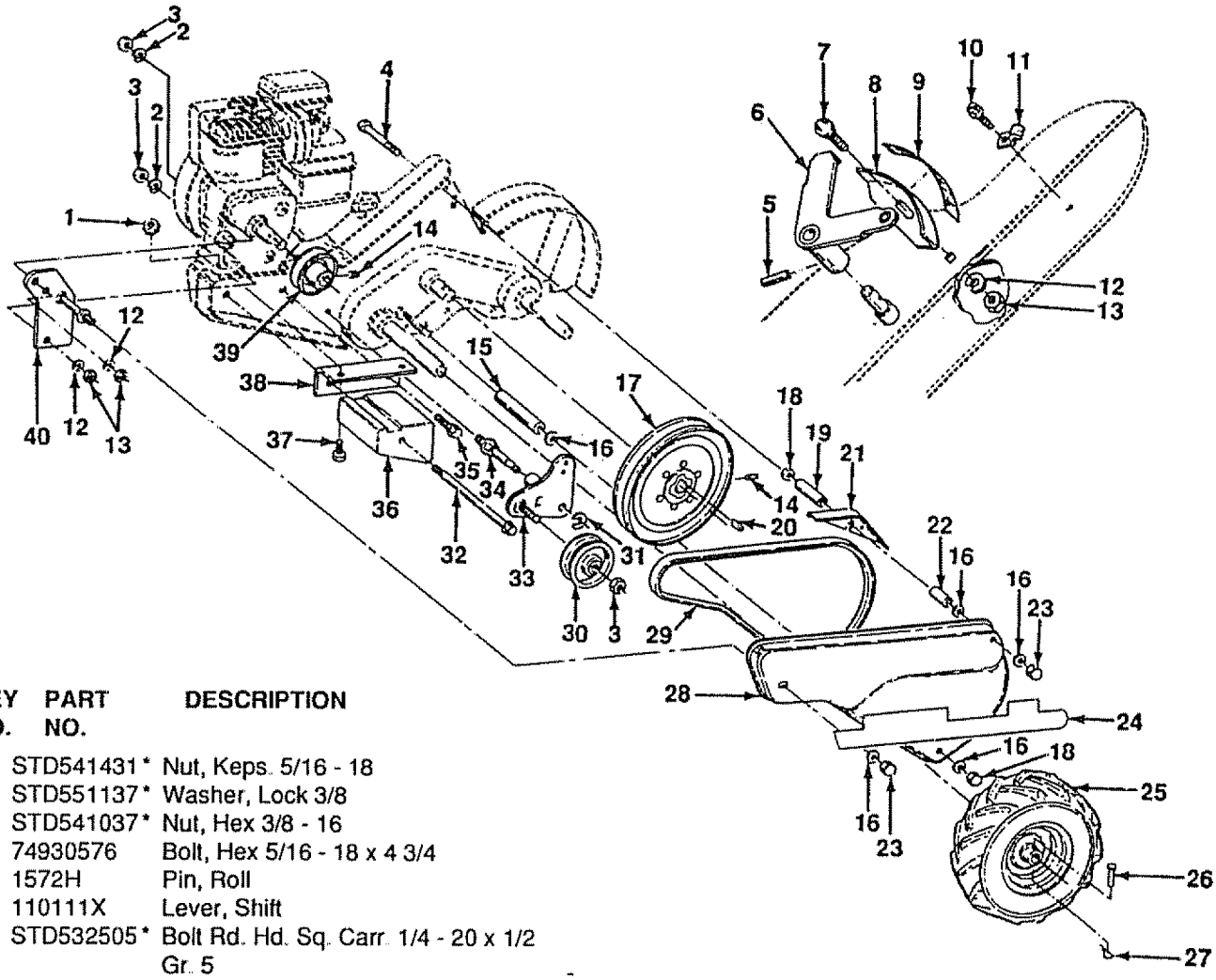

KEY NO.	PART NO.	DESCRIPTION
1	STD541431*	Nut, Keps. 5/16 - 18
2	STD551137*	Washer, Lock 3/8
3	STD541037*	Nut, Hex 3/8 - 16
4	74930576	Bolt, Hex 5/16 - 18 x 4 3/4
5	1572H	Pin, Roll
6	110111X	Lever, Shift
7	STD532505*	Bolt Rd. Hd. Sq. Carr. 1/4 - 20 x 1/2 Gr. 5
8	8700J	Panel, Shift Indicator
9	102180X	Decal, Shift Indicator
10	86777	Screw, Hex - Washer Head, slotted #10 - 24 x 1/2
11	9484R	Clip
12	STD551125*	Washer, Lock 1/4
13	STD541025*	Nut, Hex 1/4 - 20
14	STD503103*	Screw, Set Hex. 5/16 - 18 x 3/8
15	120938X	Spacer, Split 0.327 x 0.42 x 2.68
16	STD551031*	Washer, 11/32 x 11/16 x 16 Ga.
17	100473M	Sheave, Transmission
18	STD541031*	Nut, Hex 5/16 - 18
19	110651X	Spacer, Split 0.327 x 0.42 x 1.75
20	2649M	Key, Square 3/16 x 1-1/8
21	110653X	Guard, Pinch Point
22	110652X	Spacer, Split 0.327 x 0.42 x 2.09
23	104214X	Nut, Cap 5/16 - 18
24	110804X	Decal, Belt Guard
25	102190X	Tire
	109208X	Rim
	795R	Tire Valve

KEY NO.	PART NO.	DESCRIPTION
26	126875X	Rivet, Drilled
27	STD624003*	Clip, Hairpin
28	102148X361	Guard, Belt
29	102143X	Belt, V
30	104679X	Pulley, Idler
31	12000032	Ring, Klip
32	102384X	Bolt, Hex 5/16 - 16 x 12
33	105611X	Bracket, Idler
34	102141X	Shaft, Idler Arm
35	STD523710*	Bolt, Hex 3/8 - 16 x 1
36	102383X	Counterweight, L. H.
37	74760524	Bolt, Hex 5/16 - 18 x 1 1/2
38	102331X	Braket, Reinforcement, L. H.
39	102142X	Sheave, Engine
40	102376X	Bracket, Guard Belt

* STANDARD HARDWARE--PURCHASE LOCALLY

REPAIR PARTS

4 H.P. CRAFTSMAN TILLER - MODEL NUMBER 917.299642

MAINFRAME, RIGHT SIDE

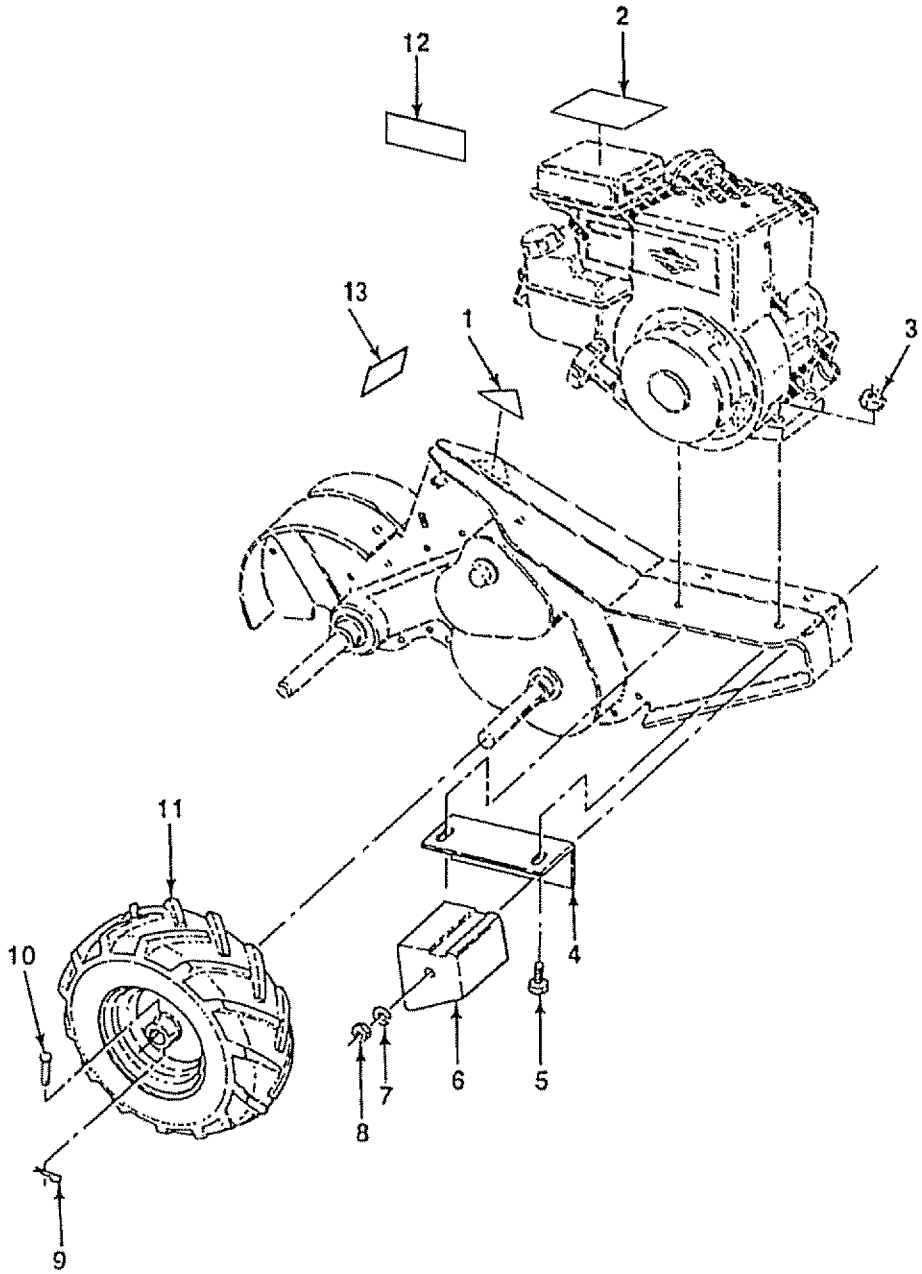

KEY NO.	PART NO.	DESCRIPTION
1	- - -	Decal, O.P.E.I.
2	STD541431*	Decal, Operations and Lubrication
3	73510500	Nut, Keps 5/16 - 18
4	102332X	Bracket Reinforcment
5	74760524	Bolt, Hex 5/16 - 18 x 1-1/2
6	102173X	Counter Weight, R.H.
7	STD551137*	Washer, Lock 3/8
8	STD541037*	Nut Hex 3/8 - 16
9	STD624003*	Clip, Hairpin
10	102841X	Rivet, Drilled
11	102190X	Tire
	109208X	Rim
	795R	Tire Valve
12	123080X	Decal, Engine
13	750211	Decal, U.S.A.

* STANDARD HARDWARE--PURCHASE LOCALLY

REPAIR PARTS

4 H.P. CRAFTSMAN TILLER - MODEL NUMBER 917.299642

TRANSMISSION

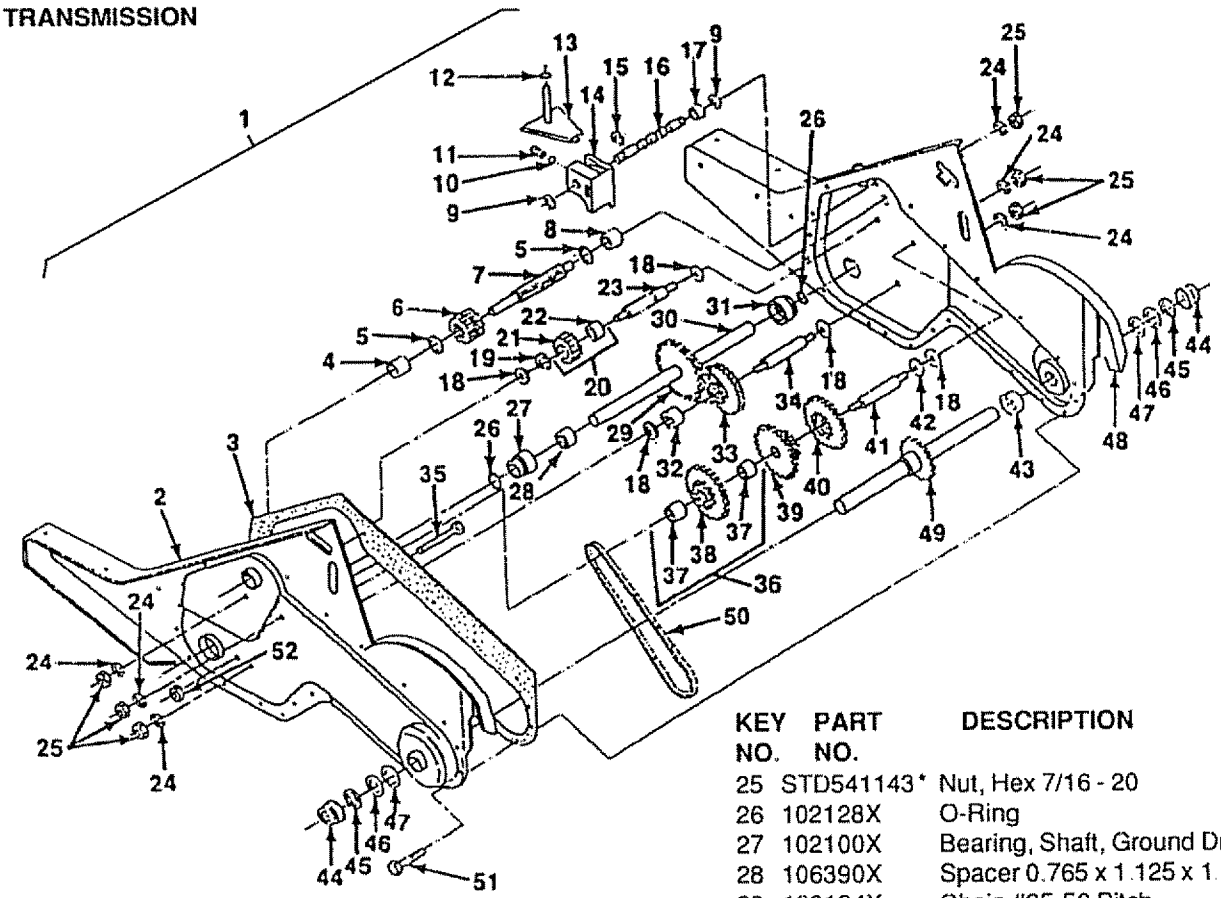

KEY NO.	PART NO.	DESCRIPTION
1	121146X	Transmission Assembly (Inc. key 2-52)
2	121147X	Gearcase, L.H. w/Bearing (Inc. key 4)
3	106211X	Gasket, Gearcase
4	5020J	Bearing, Needle
5	1370H	Washer, Thrust 5/8 x 1.10 x 1/32
6	102113X	Pinion, Input
7	102110X	Shaft, Input
8	4895H	Bearing, Needle
9	102136X	Washer, Seal
10	7392M	Ball, Steel
11	100371K	Spring, Shift, Fork
12	106160X	O-Ring
13	102107X	Arm, Shift
14	8353J	Fork, Shift
15	12000039	Ring, Klip
16	102109X	Shaft, Shift
17	104159X	Spacer, Split
18	4358J	Washer
19	12000040	Ring, Klip
20	102114X	Gear, Assembly, Reverse Idler (Inc. key 21 & 22)
21	102115X	Gear, Reverse Idler
22	6803J	Bearing, Needle
23	102111X	Shaft, Reverse Idler
24	STD551143*	Washer, Lock 7/16
25	STD541143*	Nut, Hex 7/16 - 20
26	102128X	O-Ring
27	102100X	Bearing, Shaft, Ground Drive
28	106390X	Spacer 0.765 x 1.125 x 1.23
29	102134X	Chain #35-50 Pitch
30	109204X	Ground Shaft Assembly
31	102106X	Bearing, Shaft, Ground Drive
32	106388X	Spacer 0.70 x 1.00 x 1.150
33	102121X	Sprocket and Gear Assembly
34	102112X	Shaft, Reduction (2nd)
35	102101X	Screw, Whiz, Lock 5/16 - 18 x 3/12
36	106141X	Sprocket Assembly w/Bearing (Inc. key 37 & 38)
37	4422J	Bearing, Needle
38	106142X	Sprocket, Tine
39	105345X	Gear, Cluster, Red 1st & 2nd
40	105346X	Gear, Reverse
41	8358J	Shaft, Reduction (1st)
42	4220R	Washer, Thrust
43	106146X	Spacer 1.01 x 1.75 x 0.760
44	9672R	Cup, Formed
45	102144X	Ring, Spiral
46	9676R	Seal, Ring, Rubber
47	9674R	Seal, Oil
48	121745X	Gearcase, R.H. w/Bearing (Inc key 8)
49	106144X	Shaft, Tine
50	106147X	Chain, Roller #50-50 Pitch
51	17580408	Screw 1/4 - 20 x 1/2
52	STD541031*	Nut, Hex. 5/16 - 18
53	6066J	Grease, Plastilube #1

* STANDARD HARDWARE--PURCHASE LOCALLY

REPAIR PARTS

4 H.P. CRAFTSMAN TILLER - MODEL NUMBER 917.299642

TINE SHIELD

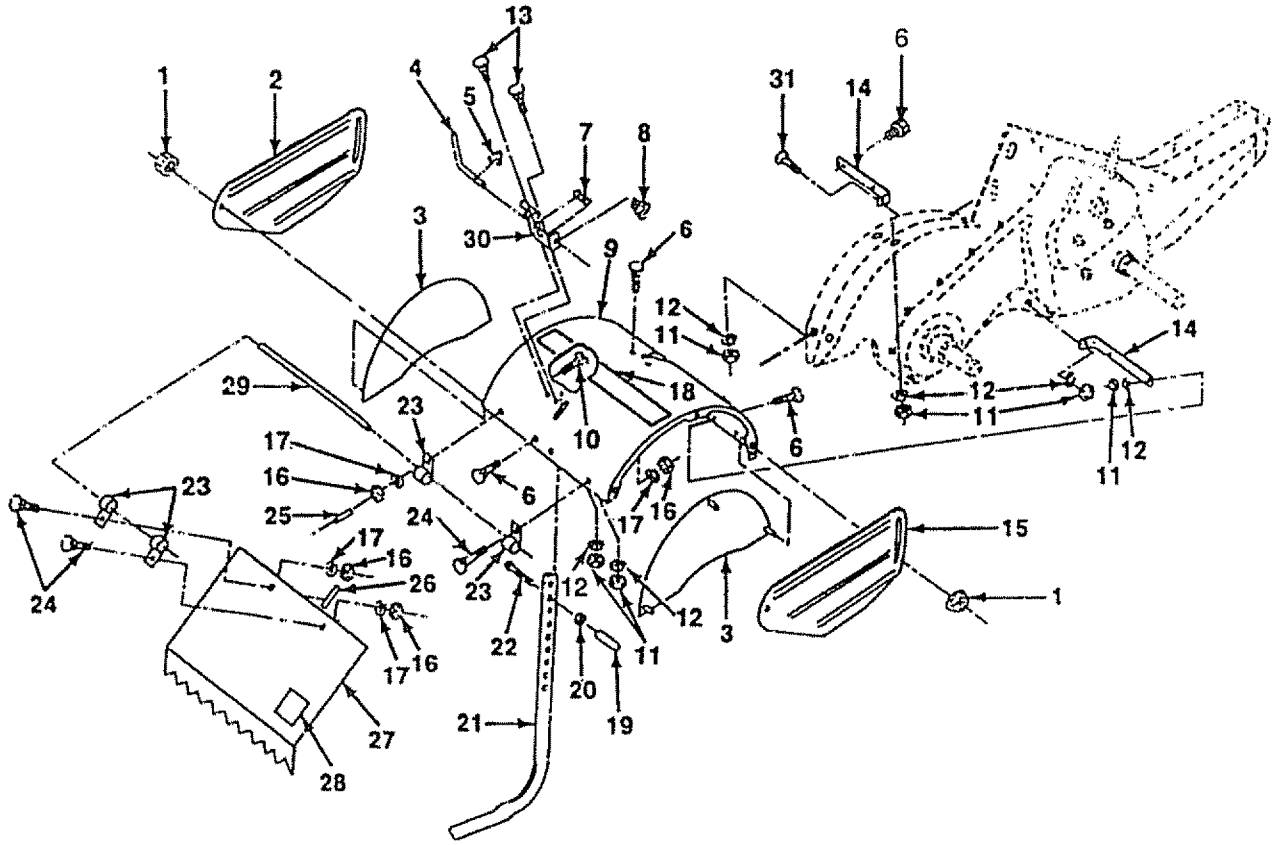

KEY NO.	PART NO.	DESCRIPTION
1	98000129	Nut, Flange 5/16 - 18
2	104086X361	Shield, Side outer L. H.
3	104085X361	Shield Side
4	8393J	Pin, Stake Depth
5	12000036	Ring, Klip
6	STD533107*	Bolt, Carriage 5/16 - 18 x 3/4 Gr 5
7	8394J	Spring
8	109230X	Spring, Depth Stake
9	102152X361	Shield, Tine
10	STD532512*	Bolt, Carriage 1/4 - 20 x 1 - 1/4 Gr. 5
11	STD541031*	Nut, Hex 5/16 - 18
12	STD551131*	Washer, Lock 5/16
13	72110508 *	Bolt, Carriage 5/16 - 18 x 1
14	124343X	Bracket, Shield Tine
15	104101X361	Shield, Side Outer R.H.
16	STD541025*	Nut Hex 1/4 - 20
17	STD551125*	Washer, Lock 1/4
18	110805X	Decal, Tine Shield
19	102701X	Grip
20	STD541037	Nut, Hex 3/8 - 16
21	102156X	Stake, Depth
22	74930632	Bolt, Hex 3/8 - 16 x 2
23	4440J	Hinge
24	STD532505*	Bolt, Carriage 1/4 - 20 x 1/2 Gr. 5
25	6712J	Cap, Vinyl
26	109227X	Pad, Idler
27	102686X361	Shield, Leveling
28	120075X	Decal, Warning
29	120588X	Pin, Hinge
30	8392J	Bracket, Latch
31	72110510	Bolt, Carriage 5/16 - 18 UNC x 1 1/4 Gr 5

* STANDARD HARDWARE--PURCHASE LOCALLY

REPAIR PARTS

4 H.P. CRAFTSMAN TILLER - MODEL NUMBER 917.299642

TINES

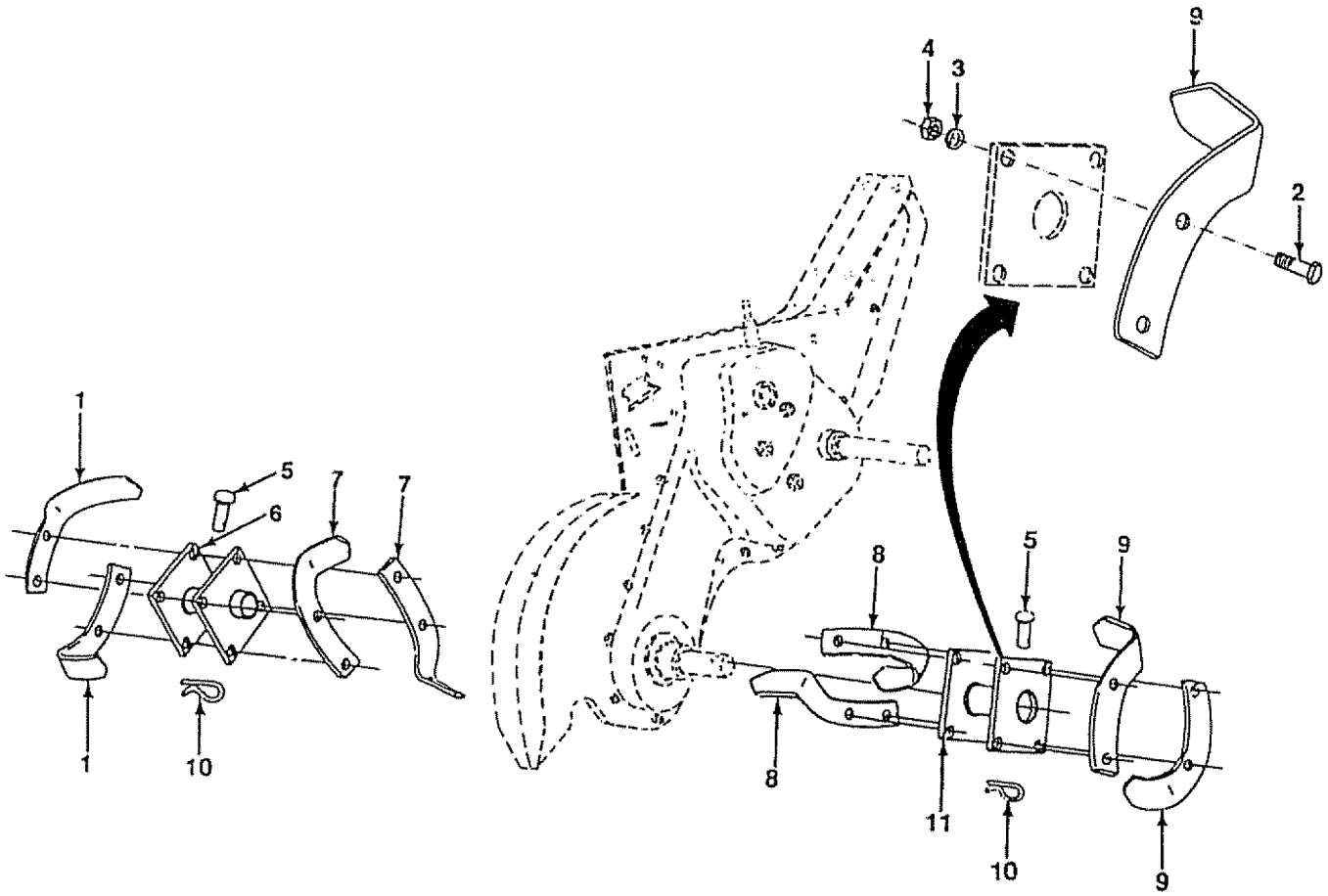

KEY NO.	PART NO.	DESCRIPTION
1	4459J	Tine L. H. Outer
2	74610616	Bolt, Hex 3/8 - 24 x 1
3	STD551137*	Washer, Lock 3/8
4	73610600	Nut, Hex 3/8 - 24
5	4929H	Retaining Pin
6	102170X	Hub, Assembly L. H.
7	6554J	Tine L. H. Inner
8	6555J	Tine, R. H. Inner
9	4460J	Tine, R. H.Outer
10	STD624008*	Clip, Hairpin
11	102172X	Hub, Assembly R. H.

* STANDARD HARDWARE--PURCHASE LOCALLY

REPAIR PARTS

4 H.P. CRAFTSMAN TILLER - MODEL NUMBER 917.299642
ENGINE - BRIGGS & STRATTON-- MODEL NUMBER 112202, TYPE NUMBER 0847-01

ENGINE, RIGHT SIDE

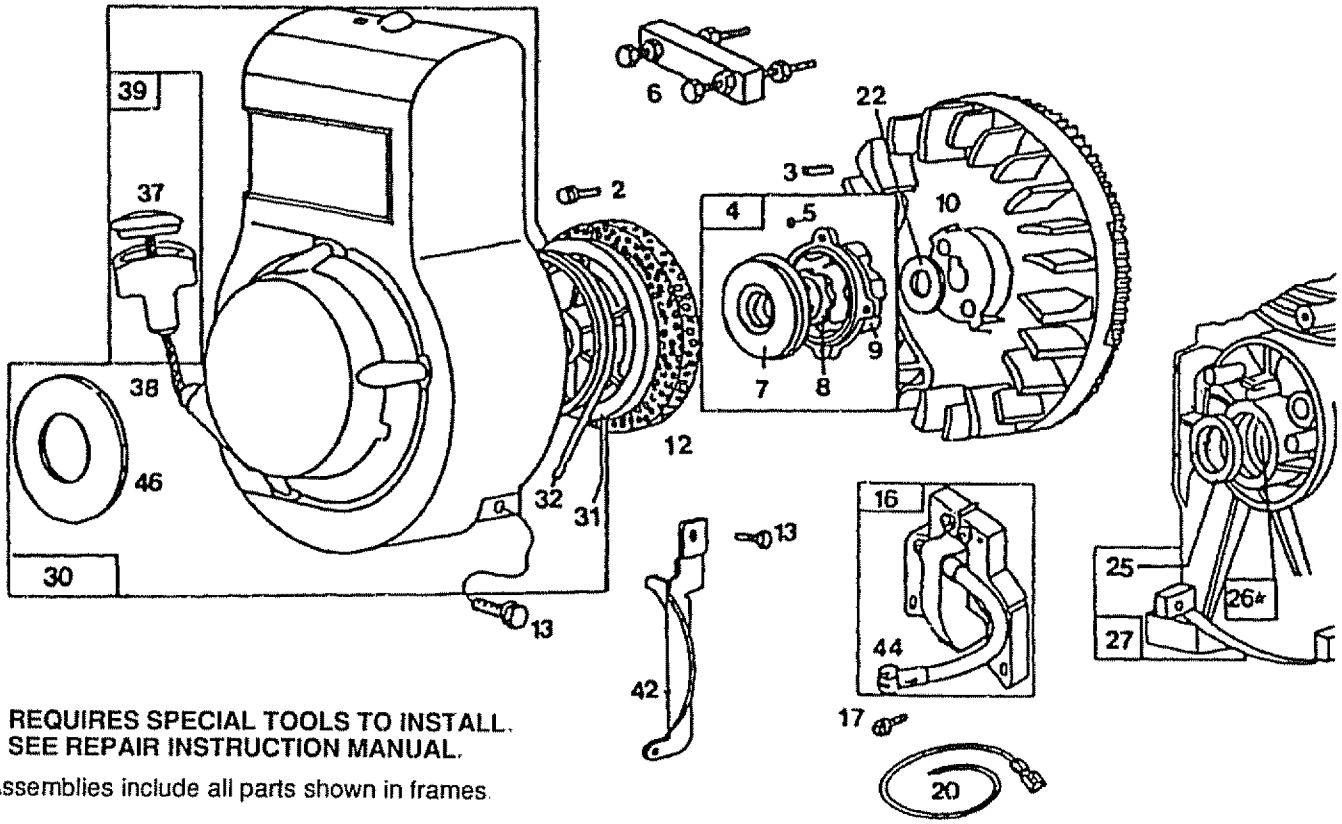

* REQUIRES SPECIAL TOOLS TO INSTALL. SEE REPAIR INSTRUCTION MANUAL.

Assemblies include all parts shown in frames.

KEY NO.	PART NO.	DESCRIPTION
2	93490	Screw, Rotating Screen Mounting Sem
3	222698	Key, Flywheel
4	399671	Clutch Assembly, Rewind Starter
5	63770	Ball, Clutch
6	19069	Puller, Flywheel (optional Accessory)
7	394506	Washer, Clutch Retainer
8	298436	Ratchet, Rewind Starter
9	394897	Housing, Starter Clutch
10	394431	Flywheel, Magneto
12	221661	Screen, Rotating
13	94153	Screw, Sem
16	397316	Armature, Magneto
17	93381	Screw, Armature Mounting Sem
20	398808	Wire, Ground
22	220865	Washer, Spring
25	393862	Seal, Oil
26	293708	Bushing, Cylinder Note: Requires special tools for installation.
27	395970	Cylinder Assembly
30	490828	Starter Assembly, Rewind
31	280439	Pulley, Rewind Starter
32	490179	Spring, Rewind Starter
37	396892	Insert, Starter Grip
38	66734	Rope, Starter (48 - 5/8")
39	393152	Grip, Starter Rope
42	223087	Guard, Flywheel
44	221798	Terminal, Ignition Cable
46	490817	Spacer

REPAIR PARTS

4 H.P. CRAFTSMAN TILLER - MODEL NUMBER 917.299642

ENGINE - BRIGGS & STRATTON -- MODEL NUMBER 112202, TYPE NUMBER 0847-01

ENGINE, REAR

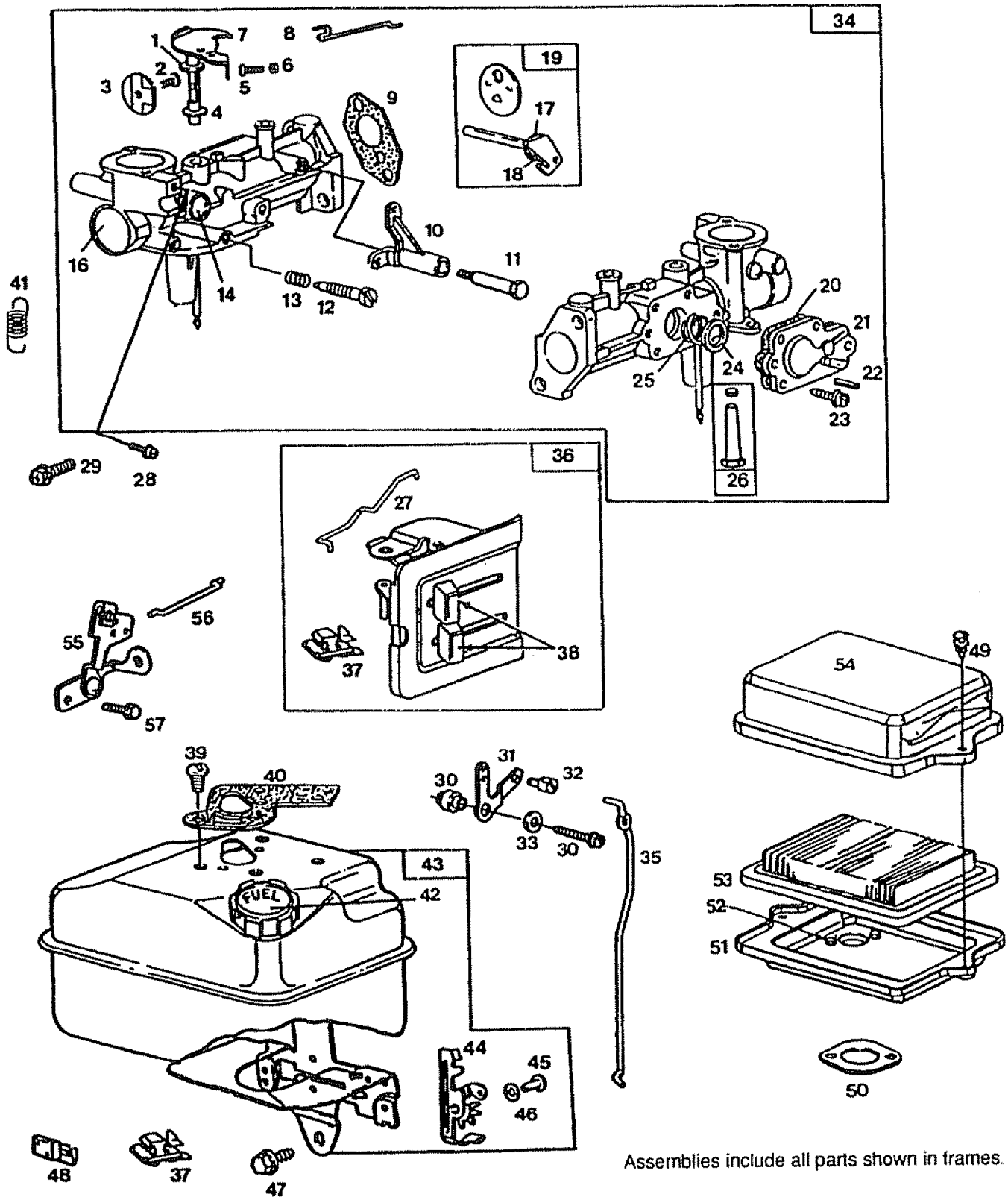

Assemblies include all parts shown in frames.

REPAIR PARTS

4 H.P. CRAFTSMAN TILLER - MODEL NUMBER 917.299642

ENGINE - BRIGGS & STRATTON -- MODEL NUMBER 112202, TYPE NUMBER 0847-01

ENGINE, REAR

KEY NO.	PART NO.	DESCRIPTION
1	271853	Washer - Throttle Shaft
2	93499	Screw - Throttle Valve Mounting Sem
3	223793	Valve - Throttle
4	398970	Seal - Throttle Shaft
5	93527	Screw - Machine, Rd. Hd. -- 5-40 x 5/8"
6	260575	Spring Throttle Adjustment
7	490048	Shaft and Lever - Throttle
8	262270	Link - Throttle
9	271936	Gasket - Intake Elbow Mounting (2 Req'd)
10	280720	Crank - Bell
11	231520	Screw - Shoulder
12	231533	Valve - Needle
13	26336	Spring - Needle Valve
14	223789	Plug - Welch
16	220352	Plug - Welch
17	270382	Washer - Foam
18	221839	Washer - Brass
19	491177	Valve Group - Choke
20	270026	Diaphragm
21	210959	Cover - Diaphragm
22	93265	Pin - Diaphragm Cover
23	93141	Screw - Diaphragm Cover
24	221377	Cap - Spring
25	262328	Spring - Fuel Pump Diaphragm
26	391813	Fuel Pipe and Clip Assembly
27	262359	Link - Choke
28	93543	Screw - Fil. Hd.
29	93357	Screw - Hex. Hd.
30	490589	Screw Carb. and Cam. Lever
31	223813	Crank - Bell
32	490507	Retainer - Link
33	220982	Washer
34	492612	Carburetor Assembly
35	262277	Rod - Control
36	490648	Plate - Control
37	396847	Switch - Stop[
38	280715	Knob - Control Bracket
39	94094	Screw - Sem
40	271928	Gasket - Fuel Tank Mounting
41	262285	Spring - Governor
42	490075	Cap, Fuel Tank
43	490491	Tank, Fuel
44	223097	Level - Governor Control
45	93491	Rivet
46	222962	Bushing - Governor Control Level
47	94408	Screw - Tank Bracket Mounting Sem
48	280321	Gear Rack - Governor
49	490073	Screw - Air Cleaner
50	271935	Gasket - Air Cleaner Mounting
51	490074	Base - Air Cleaner
52	94018	Screw - Hex. Hd.
53	399959	Filter - Air Cleaner
54	223765	Cover - Air Cleaner
55	491577	Control. Throttle
56	262470	Link - Throttle
57	93572	Screw

REPAIR PARTS

4 H.P. CRAFTSMAN TILLER - MODEL NUMBER 917.299642
ENGINE - BRIGGS & STRATTON -- MODEL NUMBER 112202, TYPE NUMBER 0847-01

ENGINE, INTERNAL PARTS

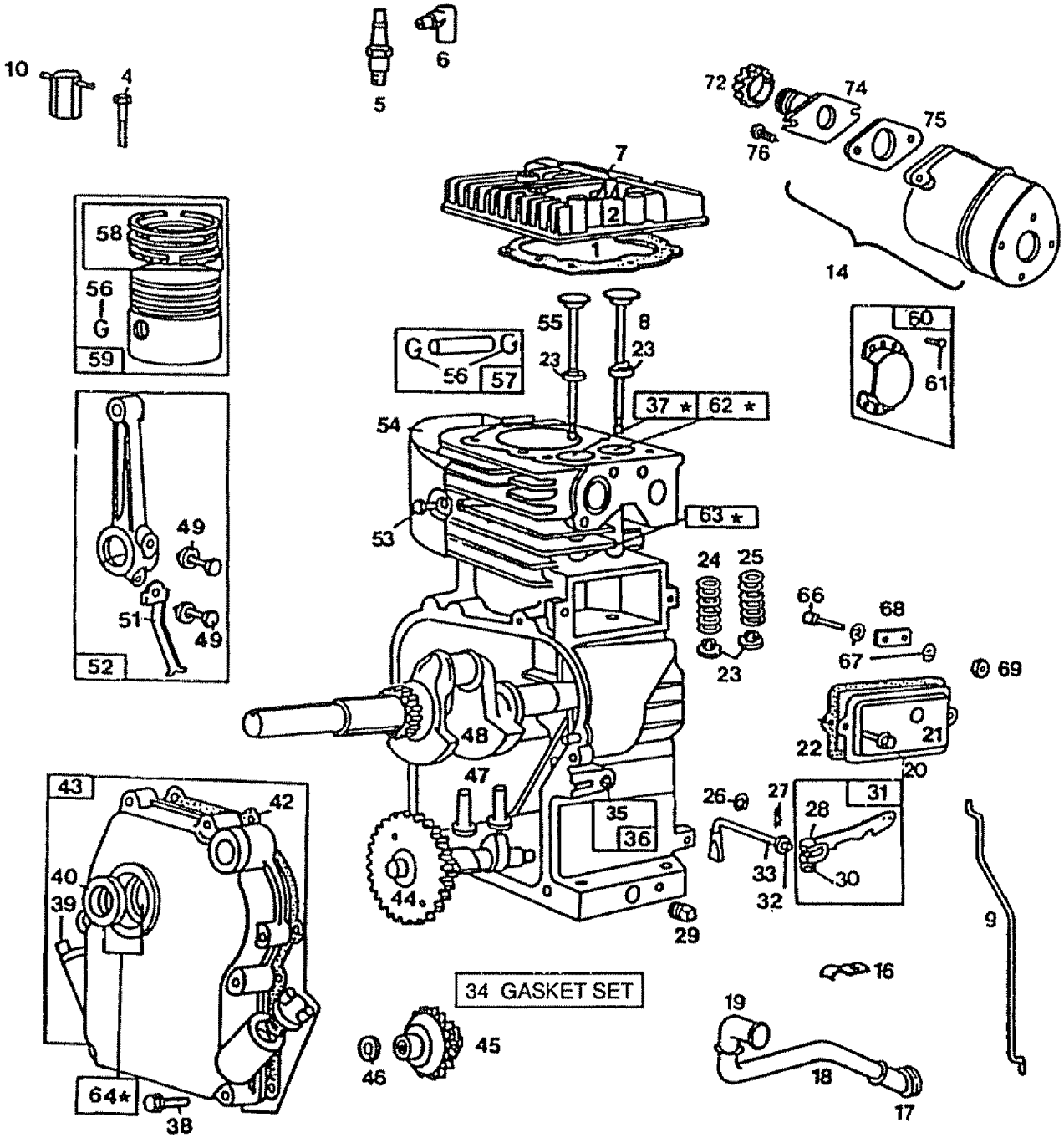

* SPECIAL TOOLS REQUIRED TO INSTALL.
SEE REPAIR INSTRUCTION MANUAL

71 DECAL KIT

73
- OPTIONAL EQUIPMENT -
SPARK ARRESTER

Assemblies include all parts shown in frames.

REPAIR PARTS

4 H.P. CRAFTSMAN TILLER - MODEL NUMBER 917.299642

ENGINE - BRIGGS & STRATTON -- MODEL NUMBER 112202, TYPE NUMBER 0847-01

ENGINE, INTERNAL PARTS

KEY NO.	PART NO.	DESCRIPTION
1	270836	Gasket - Cylinder Head
2	213141	Head - Cylinder
4	93111	Screw - Cylinder Head (1 - 15/16" long)
5	293918	Plug - Spark (with gasket) (1 - 1/2" High - 37 - 42 M.M.) (Resistor type)
6	66538	Elbow - Spark Plug
7	223085	Cover - Cylinder Head
8	261233	Valve - Intake
9	262278	Link - Governor
10	89838	Wrench - Spark Plug
14	492591	Muffler - Exhaust (Lo - Tone)
16	223786	Clamp - Breather Tube
17	66578	Grommet - Breather Tube
18	231527	Tube - Breather
19	67838	Grommet - Breather Tube
20	93394	Screw - Breather Mounting Sem
21	294178	Breather - Valve Chamber
22	27549	Gasket Valve Cover
23	93312	Retainer - Valve Spring
24	26478	Spring - Exhaust Valve
25	260552	Spring - Intake Valve
26	93307	Retainer - E-Ring
27	93306	Cotter - Hair Pin
28	92613	Bolt Governor Lever
29	91249	Plug - Pipe, 1/4" Std. Square Head
	NOTE:	93448 Plug - Pipe (Hex. Socket)
30	231082	Nut - Hex - 10-24
31	490454	Lever Ass'y - Governor
32	222450	Washer - Gov. Lever
33	231077	Crank - Governor
34	397147	Gasket Set
35	231079	Bushing - Governor Shaft
36	395970	Cylinder Assembly
37	211291	Seat - Exhaust Valve (Standard)
38	93032	Screw - Crankcase Cover Mounting Sem
	NOTE:	93656 Stud 90832 Washer - Lock
39	66768	Plug - Oil Filler
40	393862	Seal - Oil
42	270833	Gasket - Crankcase - .015" thick (Standard)
42	270895	Gasket - Crankcase - .005" thick
42	270896	Gasket - Crankcase - .009" thick
43	394620	Cover Assembly - Crankcase
44	392171	Gear - Cam
45	391737	Gear - Governor
46	221551	Washer - Thrust
47	261250	Tappet - Valve
48	261416	Crankshaft
49	94405	Screw - Connecting Rod
51	220670	Dipper - Connecting Rod
52	392939	Rod Ass'y. - Connection
	NOTE:	For Connecting Rod with .020" undersize Crankpin Bearing order No. 393710
53	93490	Screw - Cylinder Shield Mounting Sem
54	223086	Shield - Cylinder
55	212004	Valve - Exhaust
56	26026	Lock - Piston Pin
57	391649	Pin Assembly - Piston - Standard
58	391654	Ring Set - Std. Piston
58	391656	Ring Set - 010 " O.S. Piston
58	391658	Ring Set - .020" O.S. Piston
58	391660	Ring Set - .030" O.S. Piston
	NOTE:	For Chrome Piston Ring Set Std. size order NO 392330
59	391650	Piston Assembly - Std.
59	391651	Piston Assembly - .010" O.S.
59	391652	Piston Assembly - .020" O.S.
59	391653	Piston Assembly - .030" O.S.
60	393760	Deflector - Exhaust
61	93705	Screw - Sem
62	211172	Seat - Intake Valve (Standard)
63	231348	Guide - Exhaust Valve
	NOTE:	63709 Guide - Intake Valve
64	293708	Bushing Assembly - Crackcase Cover (Includes 220538 Bushing)
	NOTE:	Bushings require special tools for installation.
66	90200	Screw - Machine, Fil. Hd. - 8 - 32 x 1/2"
67	92791	Lockwasher - Shakeproof
68	66895	Insulator
69	90576	Nut - Hex. - 8 - 32
71	491098	Decal (Label) Kit
72	220859	Locknut - Muffler
73	396800	Spark Arrester Kit
74	492232	Adaptor/Muffler
75	272203	Gasket Exhaust
76	94153	Screw Hex Head

SERVICE NOTES

SERVICE NOTES

SEARS

OWNERS MANUAL

MODEL NO. 917.299642

HOW TO ORDER REPAIR PARTS

CRAFTSMAN

4.0 HORSEPOWER 14 INCH TINE WIDTH COUNTER ROTATING TINES REAR TINE TILLER

Each Tiller has its own model number. Each Engine has its own model number.

The Model Number for your Tiller will be found on a plate attached to the top of the Transmission.

The model number for the Engine will be found on the Blower Housing of the Engine adjacent to the Spark Plug.

All parts listed herein may be ordered from any Sears, Roebuck and Co. Service Centers and most Retail Stores.

WHEN ORDERING REPAIR PARTS, ALWAYS GIVE THE FOLLOWING INFORMATION:

- PRODUCT - "REAR TINE TILLER"
- MODEL NUMBER - 917.299641
- ENGINE MODEL NUMBER -112202 - TYPE NUMBER -0847-01
- PART NUMBER
- PART DESCRIPTION

Your Sears merchandise has added value when you consider Sears has service units nationwide staffed with Sears trained technicians... professional technicians specifically trained to insure that we meet our pledge to you, we service what we sell.

Sears, Roebuck and Co., Chicago, IL 60684 U.S.A.

124340X2E 4.6.90

PRINTED IN U.S.A.